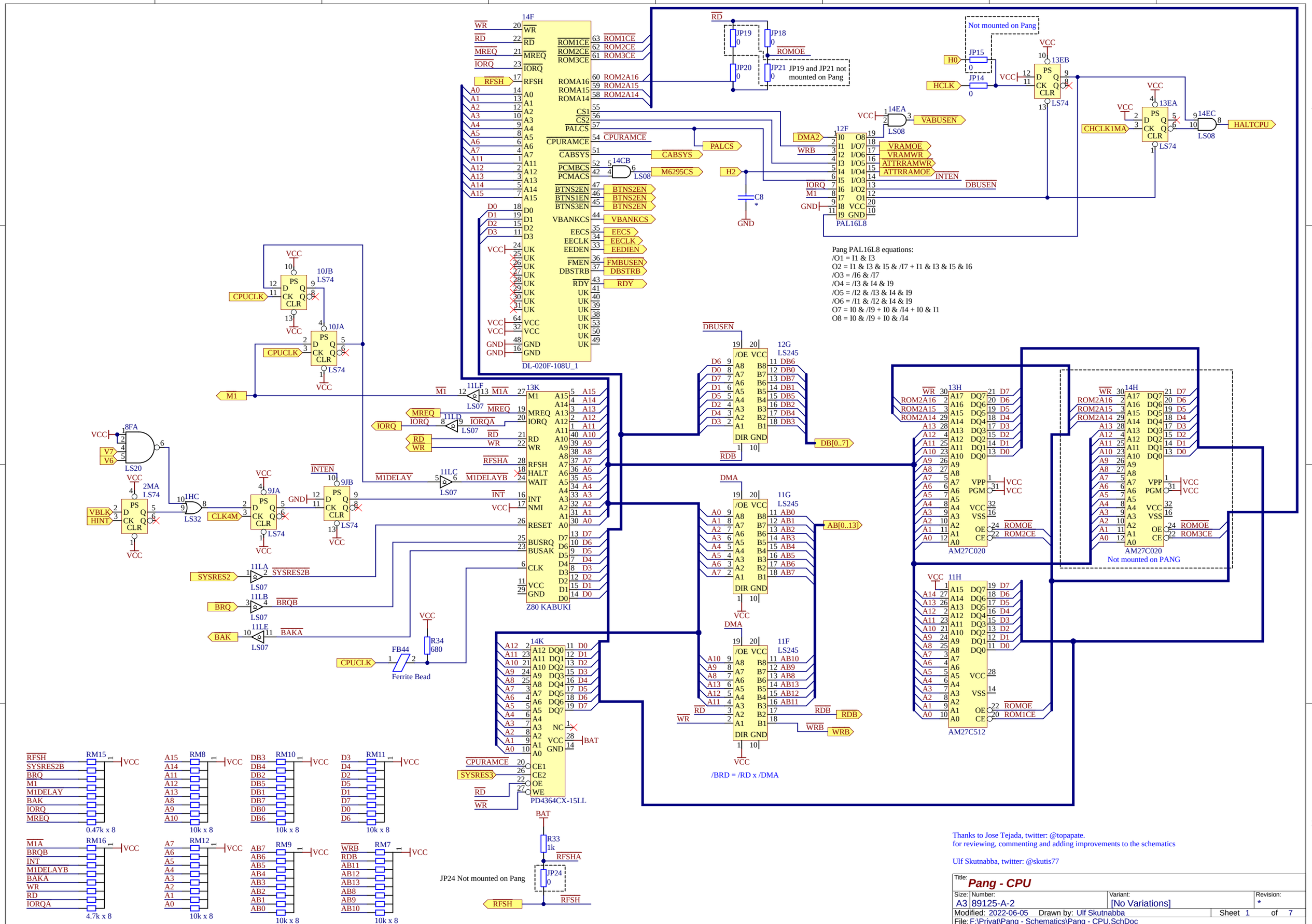
14F
DL-020F-108U_1
Z80 KABUKI
Not mounted on Pang
JP19 and JP21 not mounted on Pang
12F
PAL16L8
Pang PAL16L8 equations:
/O1 = I1 & I3
O2 = I1 & I3 & I5 & /I7 + I1 & I3 & I5 & I6
/O3 = /I6 & /I7
/O4 = /I3 & I4 & I9
/O5 = /I2 & /I3 & I4 & I9
/O6 = /I1 & /I2 & I4 & I9
O7 = I0 & /I9 + I0 & /I4 + I0 & I1
O8 = I0 & /I9 + I0 & /I4
12G LS245
11G LS245
11F LS245
/BRD = /RD x /DMA
13H AM27C020
14H AM27C020
Not mounted on PANG
11H AM27C512
13K Z80 KABUKI
14K PD4364CX-15LL
JP24 Not mounted on Pang
Ferrite Bead
0.47k x 8
10k x 8
4.7k x 8
Thanks to Jose Tejada, twitter: @topapate.
for reviewing, commenting and adding improvements to the schematics
Ulf Skutnabba, twitter: @skutis77
Title: Pang - CPU
Size: A3
Number: 89125-A-2
Variant: [No Variations]
Revision: *
Modified: 2022-06-05
Drawn by: Ulf Skutnabba
Sheet 1 of 7
File: F:\Privat\Pang - Schematics\Pang - CPU.SchDoc

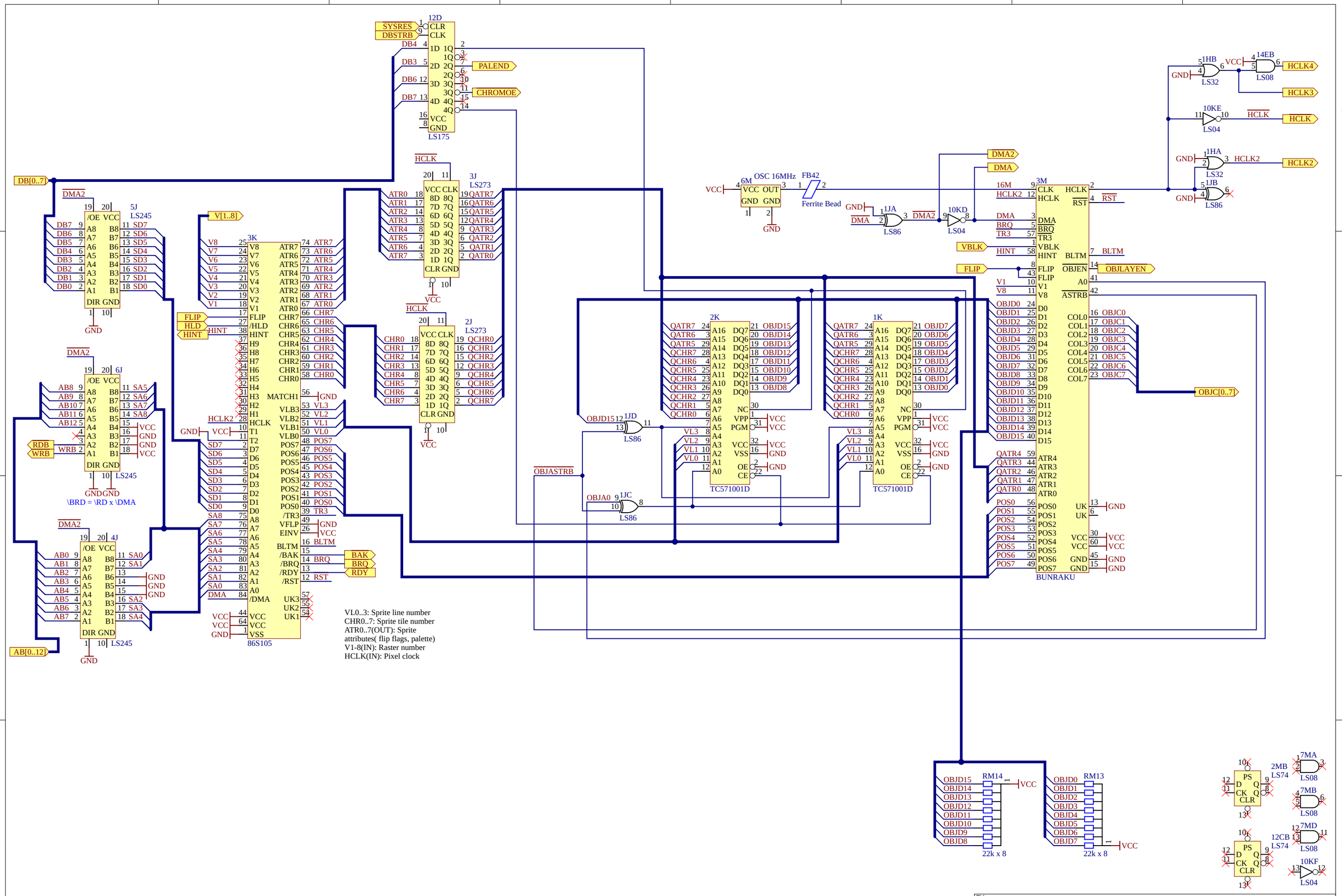

Title: **Pang - Objects**

Size:	Number:	Variant:	Revision:
A3	89125-A-2	[No Variations]	*

Modified: 2022-06-05 Drawn by: Ulf Skutnabba Sheet 2 of 7

File: F:\Privat\Pang - Schematics\Pang - Objects.SchDoc

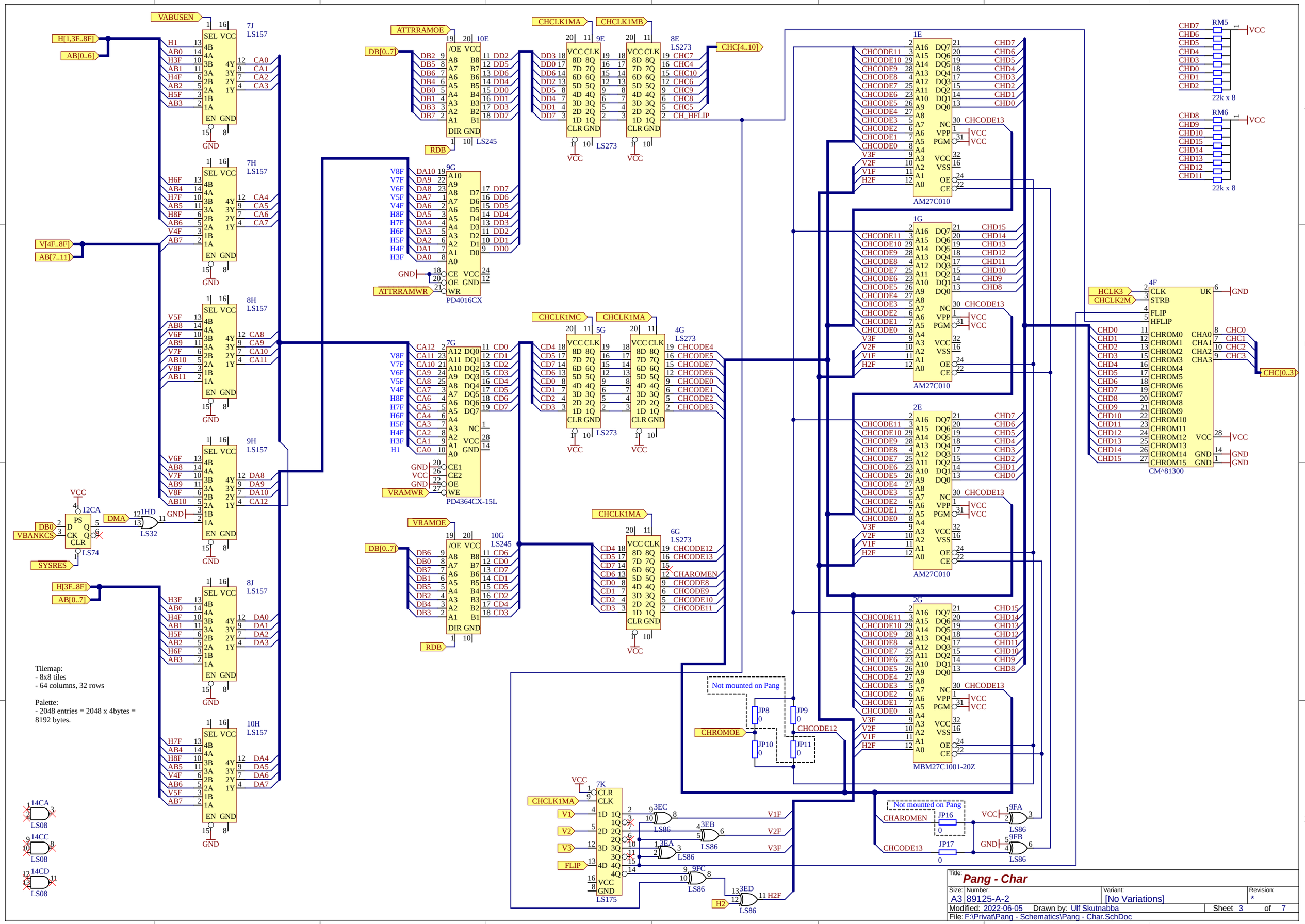

Tilemap:
- 8x8 tiles
- 64 columns, 32 rows

Palette:
- 2048 entries = 2048 x 4bytes = 8192 bytes.

Title: **Pang - Char**

Size	Number	Variant	Revision
A3	89125-A-2	[No Variations]	*

Modified: 2022-06-05 Drawn by: Ulf Skutnabba Sheet 3 of 7

File: F:\Privat\Pang - Schematics\Pang - Char.SchDoc

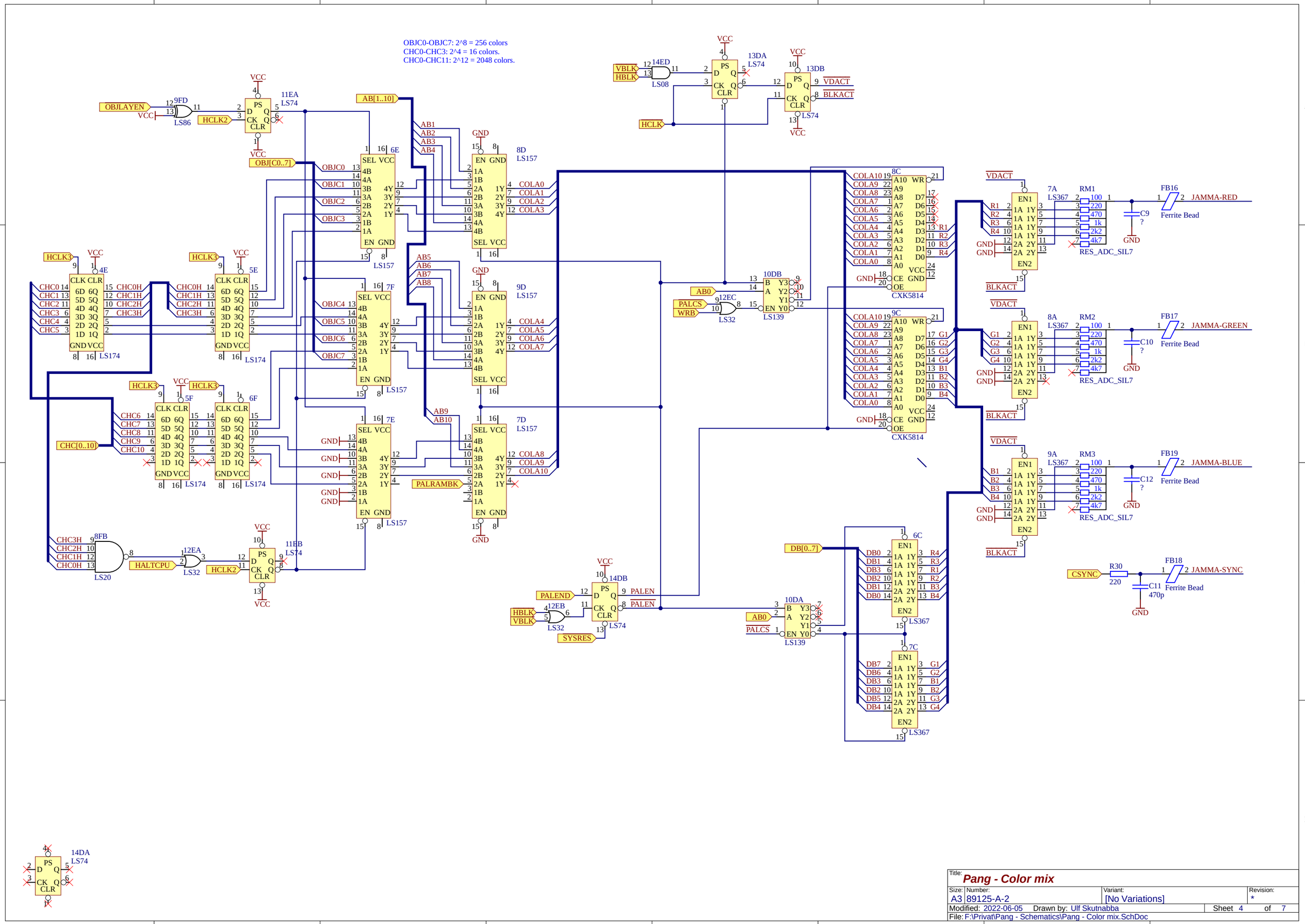
OBJC0-OBJC7: 2^8 = 256 colors
CHC0-CHC3: 2^4 = 16 colors.
CHC0-CHC11: 2^12 = 2048 colors.
OBJLAYEN
HCLK2
HCLK3
OBJ[C0..7]
AB[1..10]
CHC[0..10]
HALTCPU
PALRAMBK
PALEND
PALEN
SYSRES
HBLK
VBLK
HCLK
VDACT
BLKACT
PALCS
WRB
AB0
DB[0..7]
CSYNC
JAMMA-RED
JAMMA-GREEN
JAMMA-BLUE
JAMMA-SYNC
Ferrite Bead
RES_ADC_SIL7
LS86
LS74
LS157
LS174
LS20
LS32
LS139
LS367
CXK5814
Title:
Pang - Color mix
Size: A3
Number: 89125-A-2
Variant: [No Variations]
Revision: *
Modified: 2022-06-05
Drawn by: Ulf Skutnabba
Sheet 4 of 7
File: F:\Privat\Pang - Schematics\Pang - Color mix.SchDoc

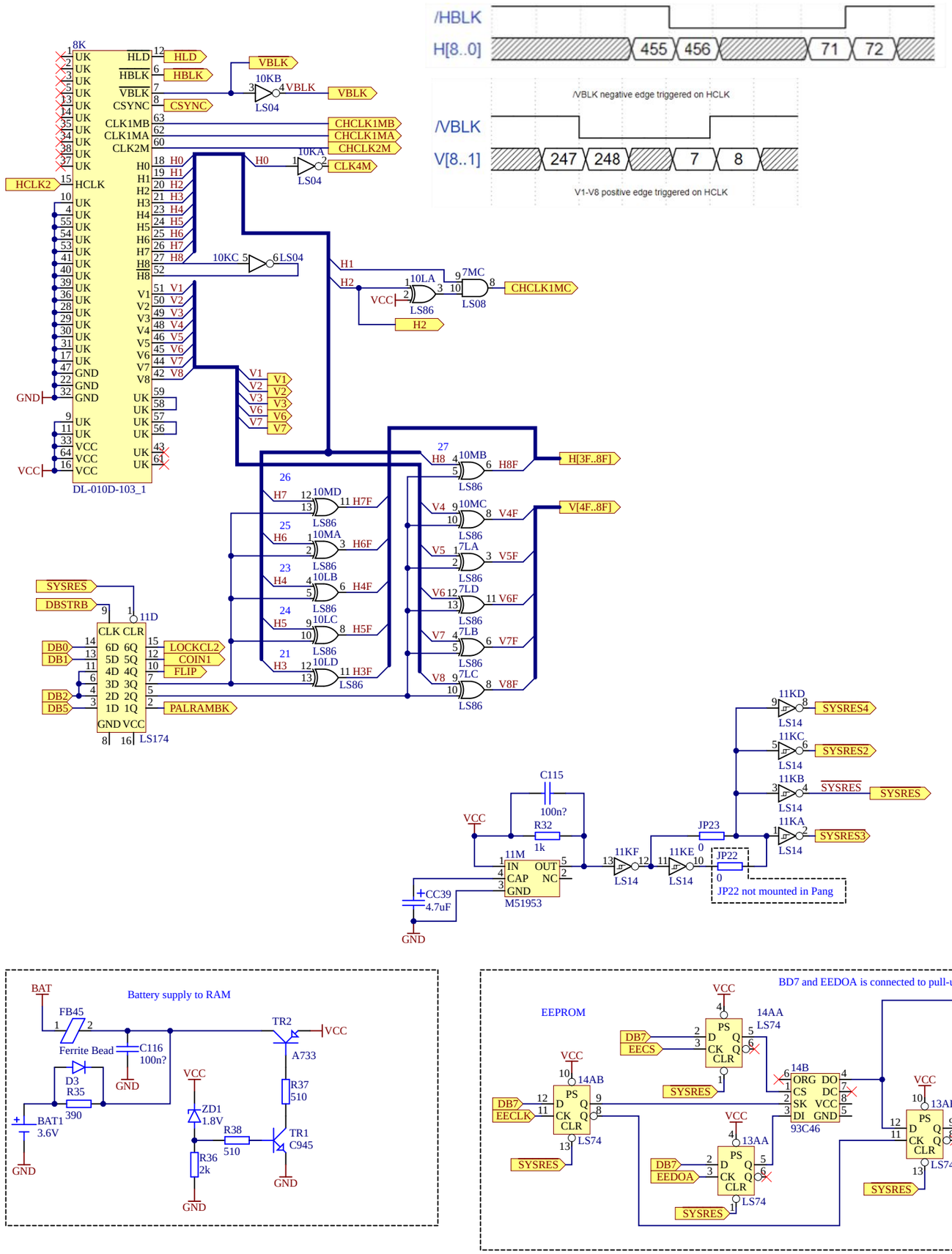

Title: **Pang - Misc**			
Size: A3	Number: 89125-A-2	Variant: [No Variations]	Revision: *
Modified: 2022-06-03	Drawn by: Ulf Skutnabba	Sheet 5 of 7	
File: F:\Privat\Pang - Schematics\Pang - Misc.SchDoc			

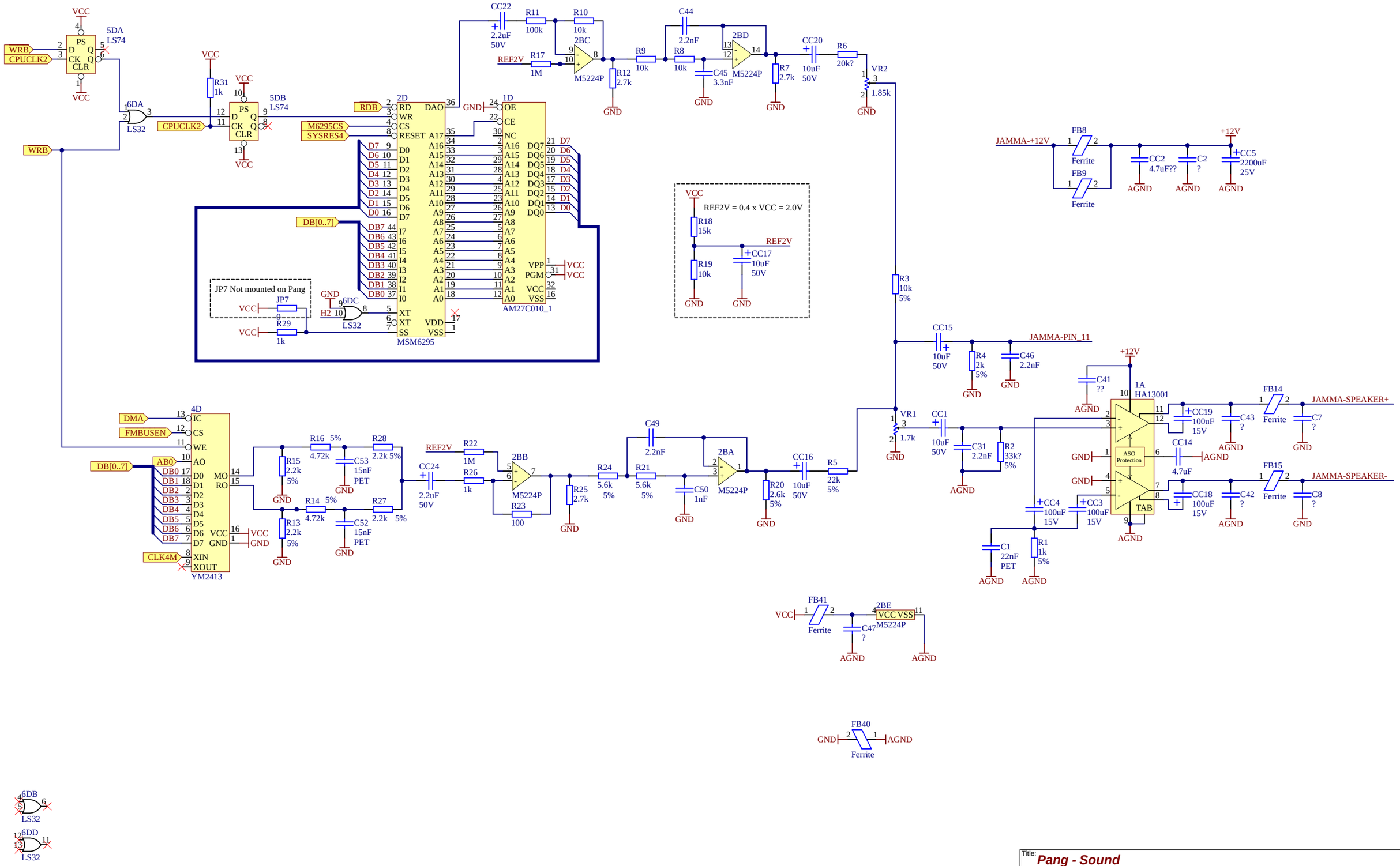

Title: **Pang - Sound**

Size	Number	Variant	Revision
A3	89125-A-2	[No Variations]	*

Modified: 2022-06-03 Drawn by: Ulf Skutnabba Sheet 6 of 7

File: F:\Privat\Pang - Schematics\Pang - Sound.SchDoc

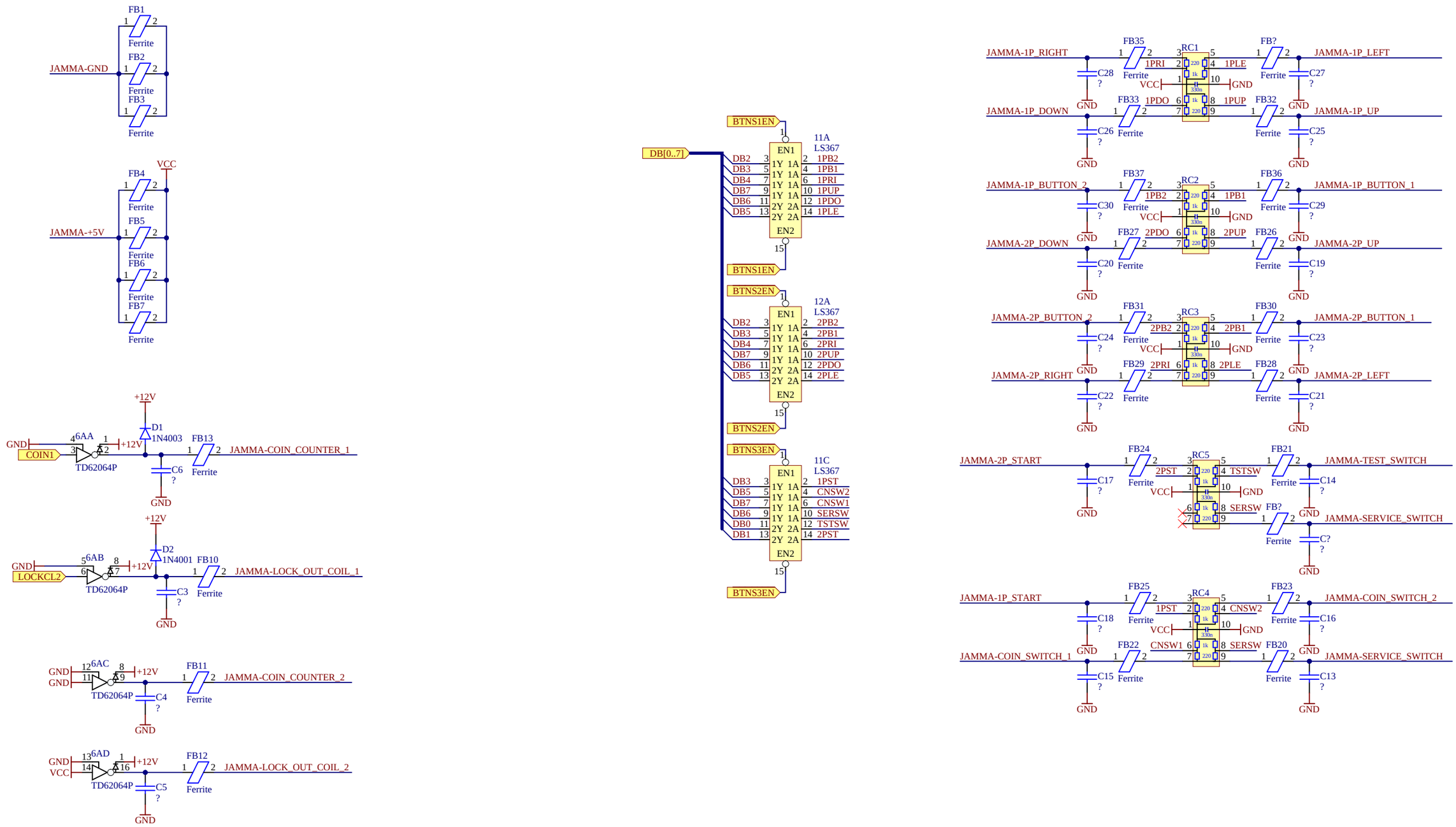

Title: **Pang - Input and Output**			
Size: A3	Number: 89125-A-2	Variant: [No Variations]	Revision: *
Modified: 2022-06-03	Drawn by: Ulf Skutnabba	Sheet 7 of 7	
File: F:\Privat\Pang - Schematics\Pang - Input and Output.SchDoc			