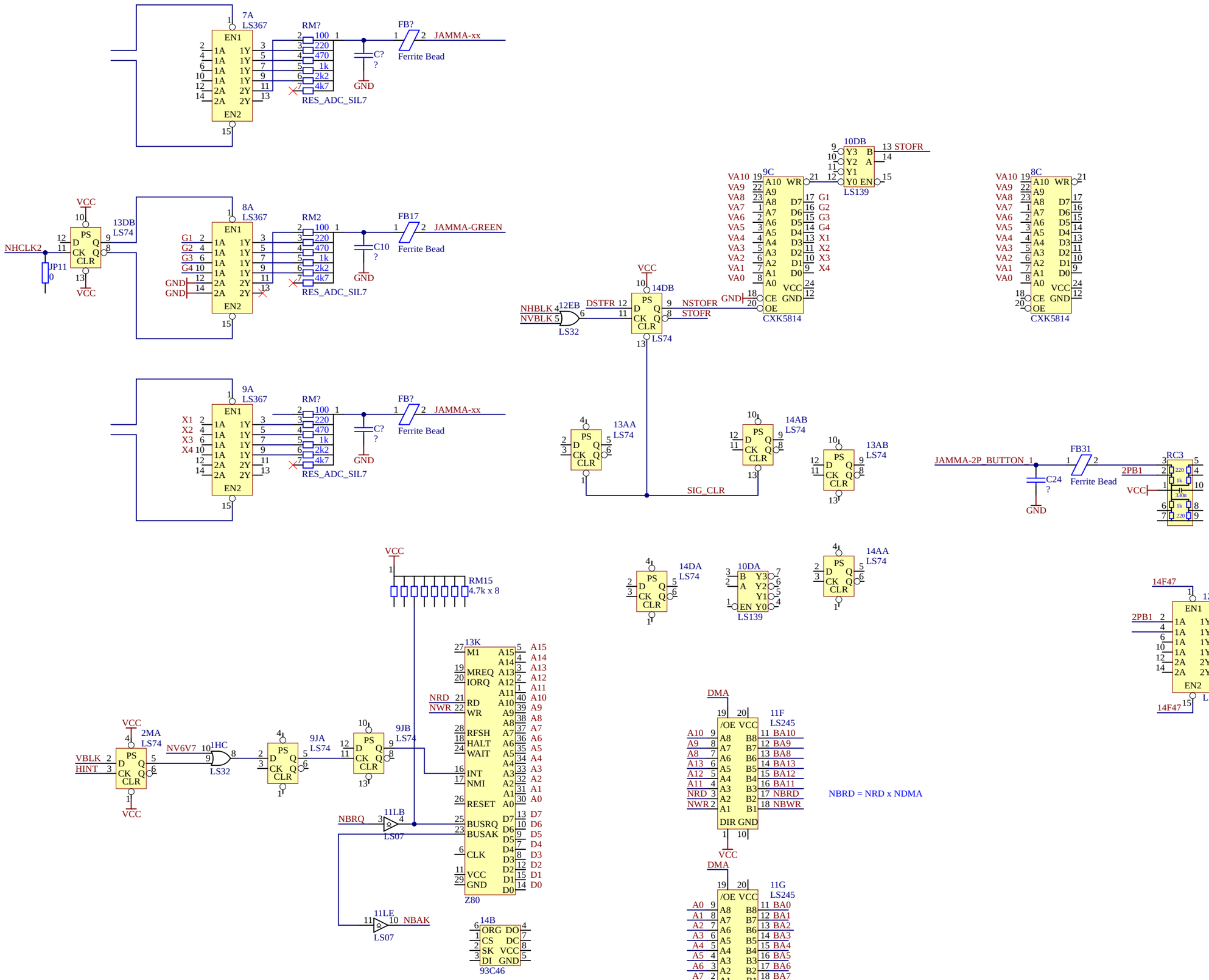

Title: **Pang - Video out**

Size:	Number:	Variant:	Revision:
A3	89125-A-2	[No Variations]	*

Modified: 2022-04-15 Drawn by: Ulf Skutnabba Sheet 1 of 1

File: F:\Privat\Pang - Schematics\Pang 4.SchDoc

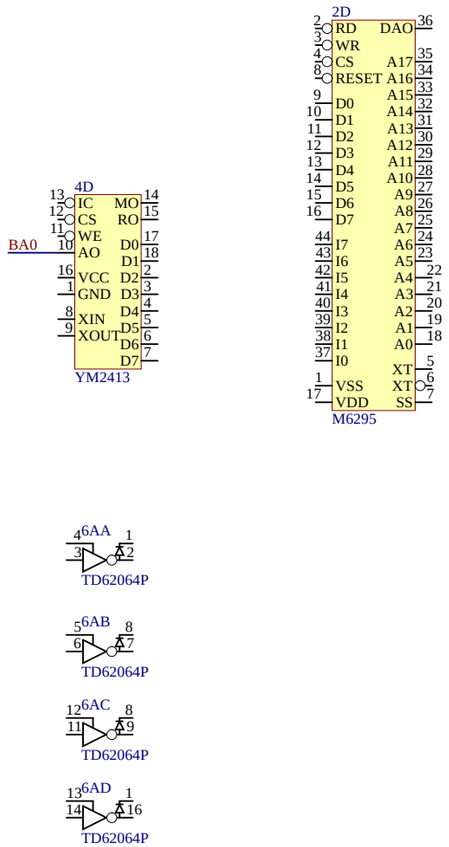

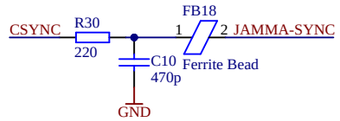

Title: **Pang - Sound**			
Size: A3	Number: 89125-A-2	Variant: [No Variations]	Revision: *
Modified: 2022-04-13	Drawn by: Ulf Skutnabba	Sheet 1 of 1	
File: F:\Privat\Pang - Schematics\Pang 3.SchDoc			

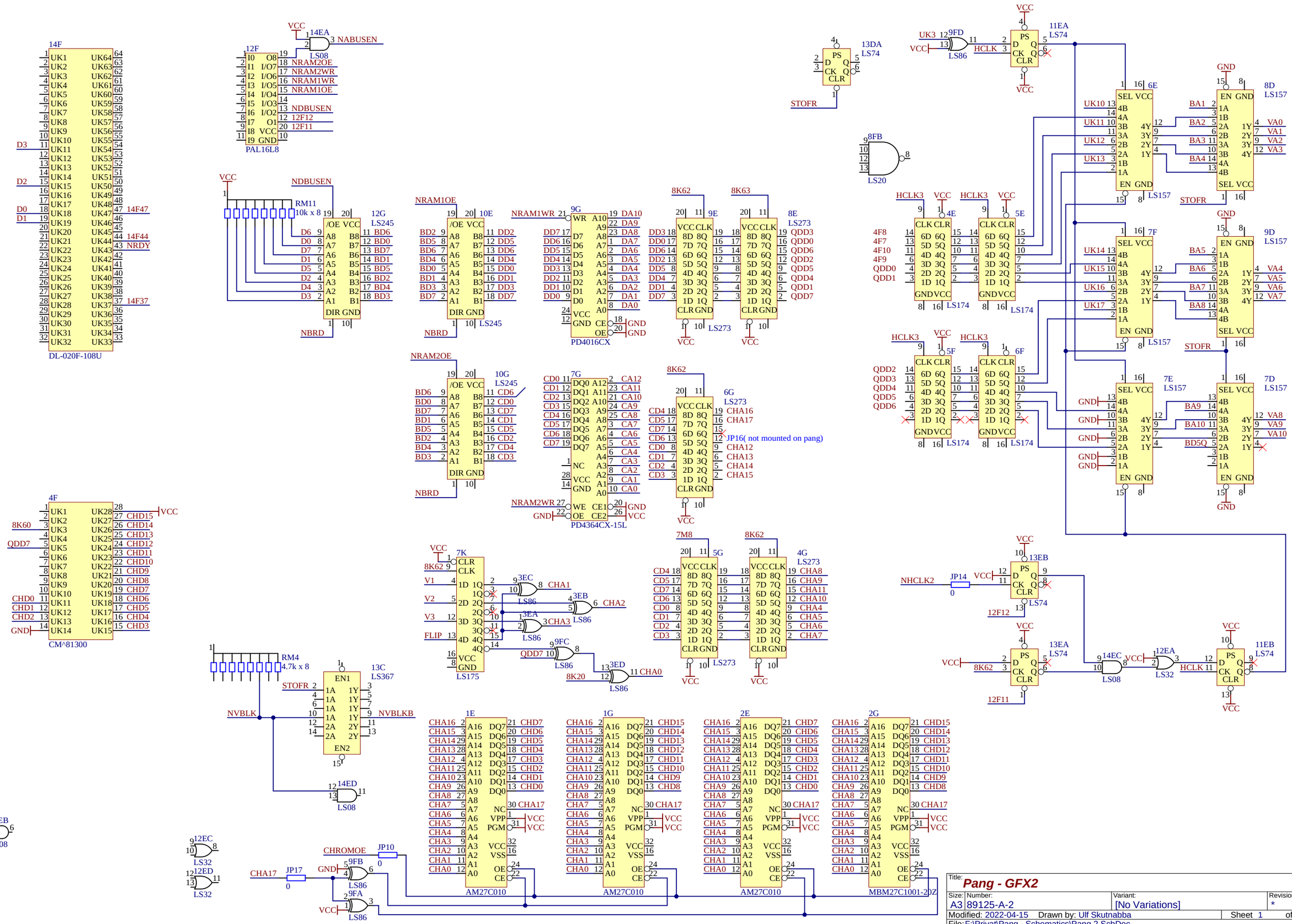
14F
DL-020F-108U
12F
PAL16L8
14EA
LS08
NABUSEN
NRAM2OE
NRAM2WR
NRAM1WR
NRAM1OE
NDBUSEN
12F12
12F11
RM11
10k x 8
12G
LS245
NBRD
10E
9G
PD4016CX
8K62
8K63
9E
8E
LS273
QDD0
QDD1
QDD2
QDD3
QDD4
QDD5
QDD6
QDD7
10G
7G
PD4364CX-15L
6G
CHA16
CHA17
JP16(not mounted on pang)
CHA12
CHA13
CHA14
CHA15
4F
CM^81300
8K60
CHD0
CHD1
CHD2
CHD3
CHD4
CHD5
CHD6
CHD7
CHD8
CHD9
CHD10
CHD11
CHD12
CHD13
CHD14
CHD15
7K
LS175
3EC
3EB
3EA
9FC
3ED
LS86
CHA1
CHA2
CHA3
CHA0
8K20
7M8
5G
4G
CHA8
CHA9
CHA11
CHA10
CHA5
CHA6
CHA7
13DA
LS74
STOFR
UK3
9FD
LS86
HCLK3
11EA
8FB
LS20
6E
8D
LS157
7F
9D
5E
4E
LS174
5F
6F
7E
7D
BA1
BA2
BA3
BA4
VA0
VA1
VA2
VA3
BA5
BA6
BA7
BA8
VA4
VA5
VA6
VA7
BA9
BA10
BD5Q
VA8
VA9
VA10
NHCLK2
JP14
13EB
12F12
13EA
12F11
14EC
12EA
LS32
11EB
RM4
4.7k x 8
13C
LS367
NVBLK
NVBLKB
14ED
14EB
12EC
12ED
CHROMOE
JP10
CHA17
JP17
9FB
9FA
1E
1G
2E
2G
AM27C010
MBM27C1001-20Z
Title:
Pang - GFX2
Size: A3
Number: 89125-A-2
Variant: [No Variations]
Revision: *
Modified: 2022-04-15
Drawn by: Ulf Skutnabba
Sheet 1 of 1
File:F:\Privat\Pang - Schematics\Pang 2.SchDoc

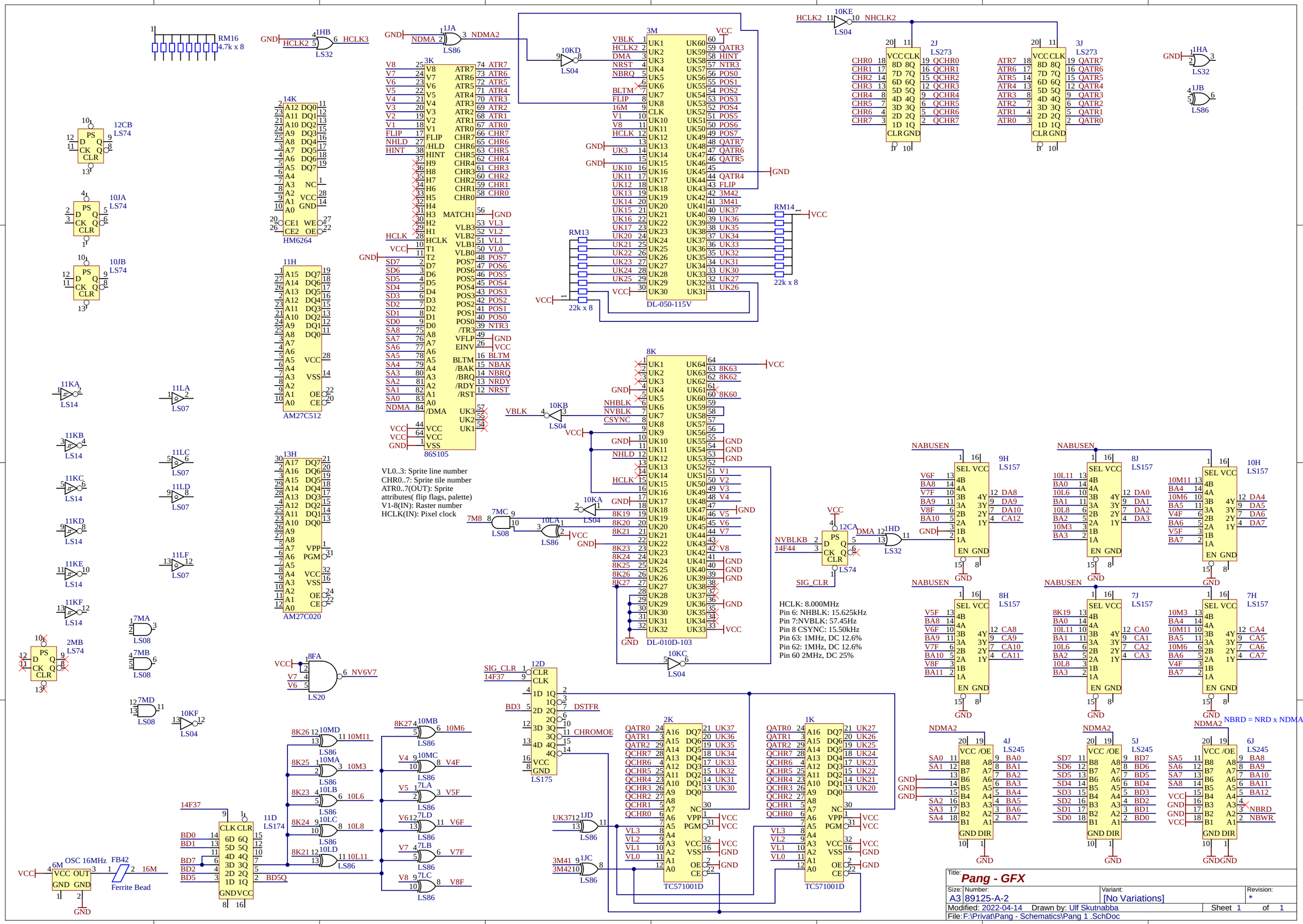
RM16
4.7k x 8
1HB
LS32
HCLK2
HCLK3
GND
1JA
LS86
NDMA2
10KD
LS04
3M
DL-050-115V
VCC
10KE
NHCLK2
2J
LS273
3J
LS273
1HA
1JB
12CB
LS74
10JA
10JB
3K
86S105
14K
HM6264
11H
AM27C512
RM13
22k x 8
RM14
22k x 8
8K
DL-010D-103
10KB
10KA
7MC
LS08
10LA
11KA
LS14
11LA
LS07
11KB
11LC
11KC
11LD
11KD
11LF
11KE
11KF
13H
AM27C020
2MB
7MA
7MB
7MD
10KF
8FA
LS20
VL0..3: Sprite line number
CHR0..7: Sprite tile number
ATR0..7(OUT): Sprite
attributes(flip flags, palette)
V1-8(IN): Raster number
HCLK(IN): Pixel clock
12CA
1HD
SIG_CLR
HCLK: 8.000MHz
Pin 6: NHBLK: 15.625kHz
Pin 7:NVBLK: 57.45Hz
Pin 8 CSYNC: 15.50kHz
Pin 63: 1MHz, DC 12.6%
Pin 62: 1MHz, DC 12.6%
Pin 60 2MHz, DC 25%
NABUSEN
9H
LS157
8J
LS157
10H
LS157
8H
LS157
7J
LS157
7H
LS157
12D
LS175
DSTFR
CHROMOE
2K
TC571001D
1K
TC571001D
4J
LS245
5J
LS245
6J
LS245
NDMA2
NBRD = NRD x NDMA
6M
OSC 16MHz
FB42
Ferrite Bead
16M
11D
LS174
BD5Q
10MD
10MA
10LB
10LC
10LD
10MB
7LA
7LB
7LC
10M11
10M3
10L6
10L8
10L11
10M6
V4F
V5F
V6F
V7F
V8F
Title:
Pang - GFX
Size: A3
Number: 89125-A-2
Variant: [No Variations]
Revision: *
Modified: 2022-04-14
Drawn by: Ulf Skutnabba
Sheet 1 of 1
File: F:\Privat\Pang - Schematics\Pang 1 .SchDoc