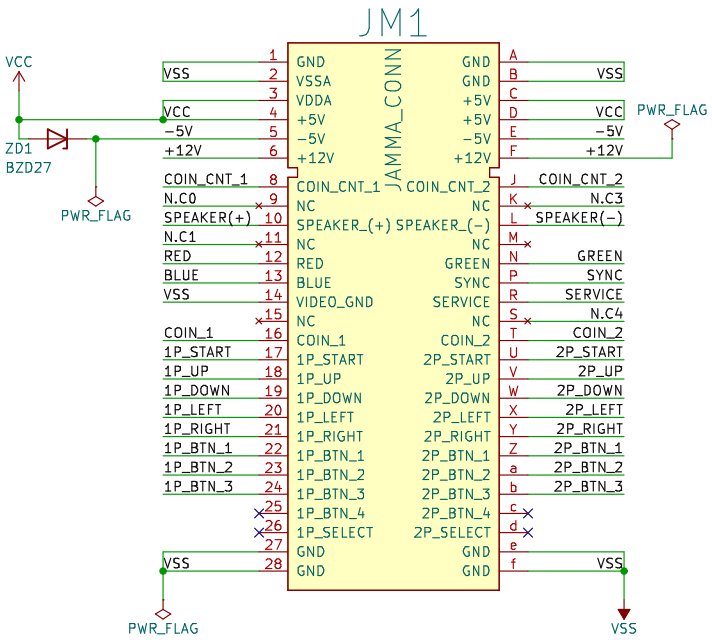
JM1
JAMMA_CONN
VCC
ZD1
BZD27
PWR_FLAG
VSS
PWR_FLAG
VCC
−5V
+12V
COIN_CNT_1
N.C0
SPEAKER(+)
N.C1
RED
BLUE
VSS
COIN_1
1P_START
1P_UP
1P_DOWN
1P_LEFT
1P_RIGHT
1P_BTN_1
1P_BTN_2
1P_BTN_3
VSS
PWR_FLAG
GND
VSSA
VDDA
+5V
−5V
+12V
COIN_CNT_1
NC
SPEAKER_(+)
NC
RED
BLUE
VIDEO_GND
NC
COIN_1
1P_START
1P_UP
1P_DOWN
1P_LEFT
1P_RIGHT
1P_BTN_1
1P_BTN_2
1P_BTN_3
1P_BTN_4
1P_SELECT
GND
GND
GND
GND
+5V
−5V
+12V
COIN_CNT_2
NC
SPEAKER_(−)
NC
GREEN
SYNC
SERVICE
NC
COIN_2
2P_START
2P_UP
2P_DOWN
2P_LEFT
2P_RIGHT
2P_BTN_1
2P_BTN_2
2P_BTN_3
2P_BTN_4
2P_SELECT
GND
GND
VSS
PWR_FLAG
VSS
COIN_CNT_2
N.C3
SPEAKER(−)
GREEN
SYNC
SERVICE
N.C4
COIN_2
2P_START
2P_UP
2P_DOWN
2P_LEFT
2P_RIGHT
2P_BTN_1
2P_BTN_2
2P_BTN_3
VSS

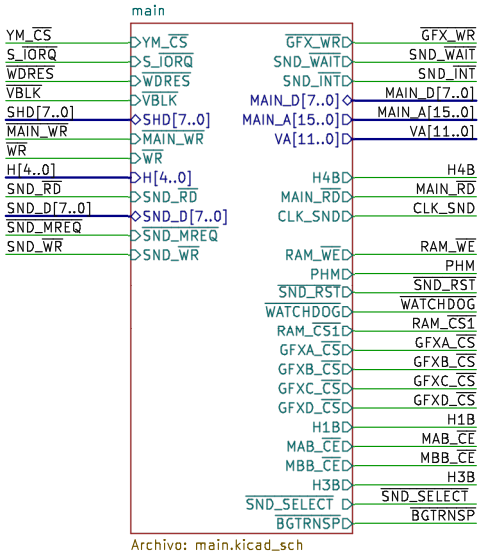
main
YM_CS
S_IORQ
WDRES
VBLK
SHD[7..0]
MAIN_WR
WR
H[4..0]
SND_RD
SND_D[7..0]
SND_MREQ
SND_WR
YM_CS
S_IORQ
WDRES
VBLK
SHD[7..0]
MAIN_WR
WR
H[4..0]
SND_RD
SND_D[7..0]
SND_MREQ
SND_WR
GFX_WR
SND_WAIT
SND_INT
MAIN_D[7..0]
MAIN_A[15..0]
VA[11..0]
H4B
MAIN_RD
CLK_SND
RAM_WE
PHM
SND_RST
WATCHDOG
RAM_CS1
GFXA_CS
GFXB_CS
GFXC_CS
GFXD_CS
H1B
MAB_CE
MBB_CE
H3B
SND_SELECT
BGTRNSP
GFX_WR
SND_WAIT
SND_INT
MAIN_D[7..0]
MAIN_A[15..0]
VA[11..0]
H4B
MAIN_RD
CLK_SND
RAM_WE
PHM
SND_RST
WATCHDOG
RAM_CS1
GFXA_CS
GFXB_CS
GFXC_CS
GFXD_CS
H1B
MAB_CE
MBB_CE
H3B
SND_SELECT
BGTRNSP
Archivo: main.kicad_sch

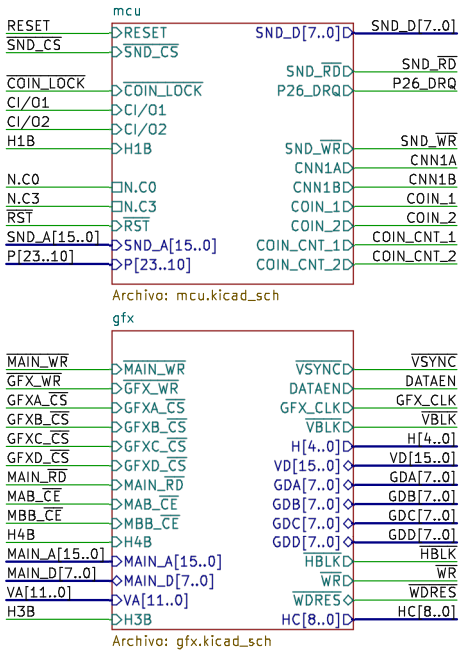
mcu
RESET
SND_CS
COIN_LOCK
CI/O1
CI/O2
H1B
N.C0
N.C3
RST
SND_A[15..0]
P[23..10]
RESET
SND_CS
COIN_LOCK
CI/O1
CI/O2
H1B
N.C0
N.C3
RST
SND_A[15..0]
P[23..10]
SND_D[7..0]
SND_RD
P26_DRQ
SND_WR
CNN1A
CNN1B
COIN_1
COIN_2
COIN_CNT_1
COIN_CNT_2
SND_D[7..0]
SND_RD
P26_DRQ
SND_WR
CNN1A
CNN1B
COIN_1
COIN_2
COIN_CNT_1
COIN_CNT_2
Archivo: mcu.kicad_sch
gfx
MAIN_WR
GFX_WR
GFXA_CS
GFXB_CS
GFXC_CS
GFXD_CS
MAIN_RD
MAB_CE
MBB_CE
H4B
MAIN_A[15..0]
MAIN_D[7..0]
VA[11..0]
H3B
MAIN_WR
GFX_WR
GFXA_CS
GFXB_CS
GFXC_CS
GFXD_CS
MAIN_RD
MAB_CE
MBB_CE
H4B
MAIN_A[15..0]
MAIN_D[7..0]
VA[11..0]
H3B
VSYNC
DATAEN
GFX_CLK
VBLK
H[4..0]
VD[15..0]
GDA[7..0]
GDB[7..0]
GDC[7..0]
GDD[7..0]
HBLK
WR
WDRES
HC[8..0]
VSYNC
DATAEN
GFX_CLK
VBLK
H[4..0]
VD[15..0]
GDA[7..0]
GDB[7..0]
GDC[7..0]
GDD[7..0]
HBLK
WR
WDRES
HC[8..0]
Archivo: gfx.kicad_sch

CABINET I/O

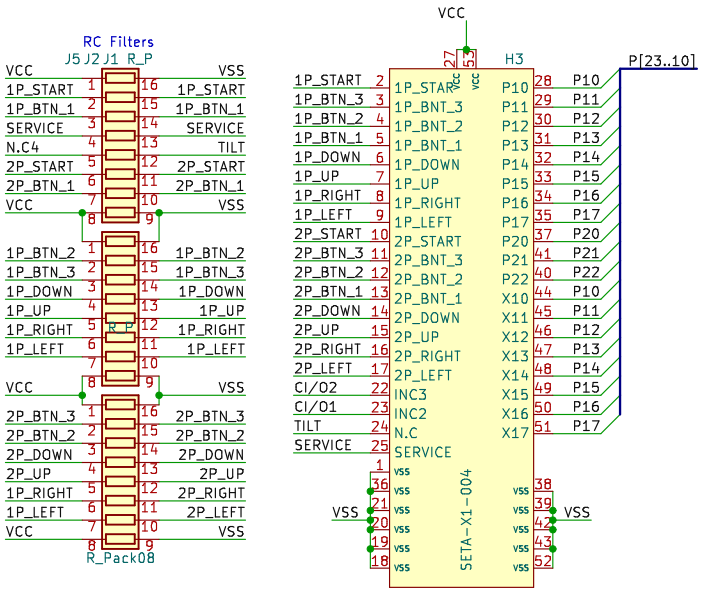
RC Filters
J5 J2 J1 R_P
VCC
1P_START
1P_BTN_1
SERVICE
N.C4
2P_START
2P_BTN_1
VCC
VSS
1P_START
1P_BTN_1
SERVICE
TILT
2P_START
2P_BTN_1
VSS
1P_BTN_2
1P_BTN_3
1P_DOWN
1P_UP
1P_RIGHT
1P_LEFT
VCC
1P_BTN_2
1P_BTN_3
1P_DOWN
1P_UP
1P_RIGHT
1P_LEFT
R_P
VCC
2P_BTN_3
2P_BTN_2
2P_DOWN
2P_UP
1P_RIGHT
1P_LEFT
VCC
VSS
2P_BTN_3
2P_BTN_2
2P_DOWN
2P_UP
2P_RIGHT
2P_LEFT
VSS
R_Pack08
VCC
27
52
H3
1P_START
1P_BTN_3
1P_BTN_2
1P_BTN_1
1P_DOWN
1P_UP
1P_RIGHT
1P_LEFT
2P_START
2P_BTN_3
2P_BTN_2
2P_BTN_1
2P_DOWN
2P_UP
2P_RIGHT
2P_LEFT
CI/O2
TILT
SERVICE
P10
P11
P12
P13
P14
P15
P16
P17
P20
P21
P22
P10
P11
P12
P13
P14
P15
P16
P17
P[23..10]
VSS
SETA-X1-004
VSS

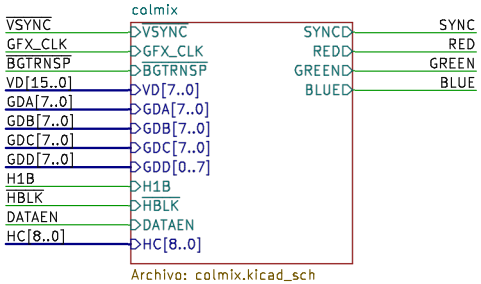
colmix
VSYNC
GFX_CLK
BGTRNSP
VD[15..0]
GDA[7..0]
GDB[7..0]
GDC[7..0]
GDD[7..0]
H1B
HBLK
DATAEN
HC[8..0]
VSYNC
GFX_CLK
BGTRNSP
VD[7..0]
GDA[7..0]
GDB[7..0]
GDC[7..0]
GDD[0..7]
H1B
HBLK
DATAEN
HC[8..0]
SYNC
RED
GREEN
BLUE
Archivo: colmix.kicad_sch
watchdog
WATCHDOG
+12V
P26_DRQ
CNN1B
CNN1A
WATCHDOG
+12V
P26_DRQ
CNN1A
CNN1B
RESET
COIN_LOCK
RESET
COIN_LOCK
Archivo: watchdog.kicad_sch

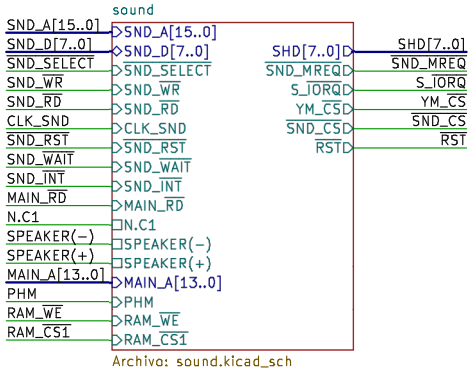
sound
SND_A[15..0]
SND_D[7..0]
SND_SELECT
SND_WR
SND_RD
CLK_SND
SND_RST
SND_WAIT
SND_INT
MAIN_RD
N.C1
SPEAKER(−)
SPEAKER(+)
MAIN_A[13..0]
PHM
RAM_WE
RAM_CS1
SND_A[15..0]
SND_D[7..0]
SND_SELECT
SND_WR
SND_RD
CLK_SND
SND_RST
SND_WAIT
SND_INT
MAIN_RD
N.C1
SPEAKER(−)
SPEAKER(+)
MAIN_A[13..0]
PHM
RAM_WE
RAM_CS1
SHD[7..0]
SND_MREQ
S_IORQ
YM_CS
SND_CS
RST
SHD[7..0]
SND_MREQ
S_IORQ
YM_CS
SND_CS
RST
Archivo: sound.kicad_sch

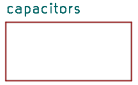
capacitors
Archivo: capacitors.kicad_sch

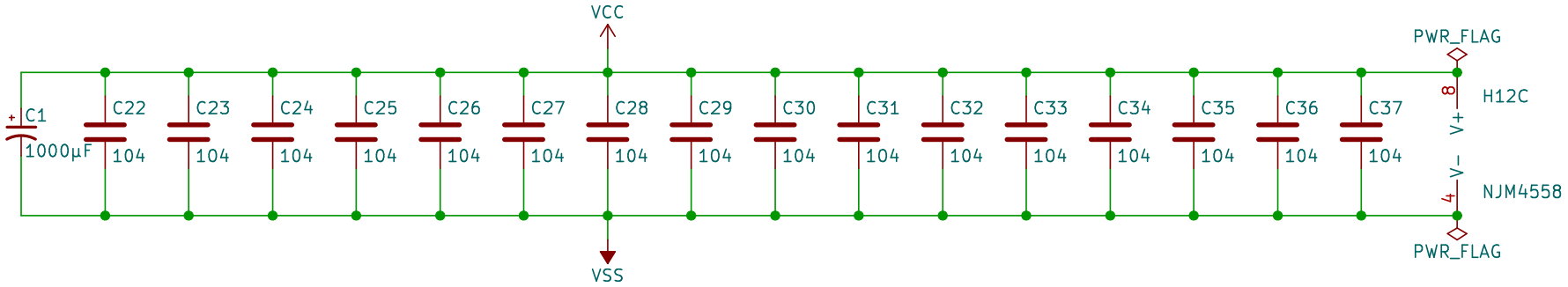

H5E 74LS02	B7C 74LS74	B4C 74LS74	B3C 74LS74	B2E 74LS08	G13G 74LS04	C6E 74LS32	B6E 74LS08	B1G 74LS04

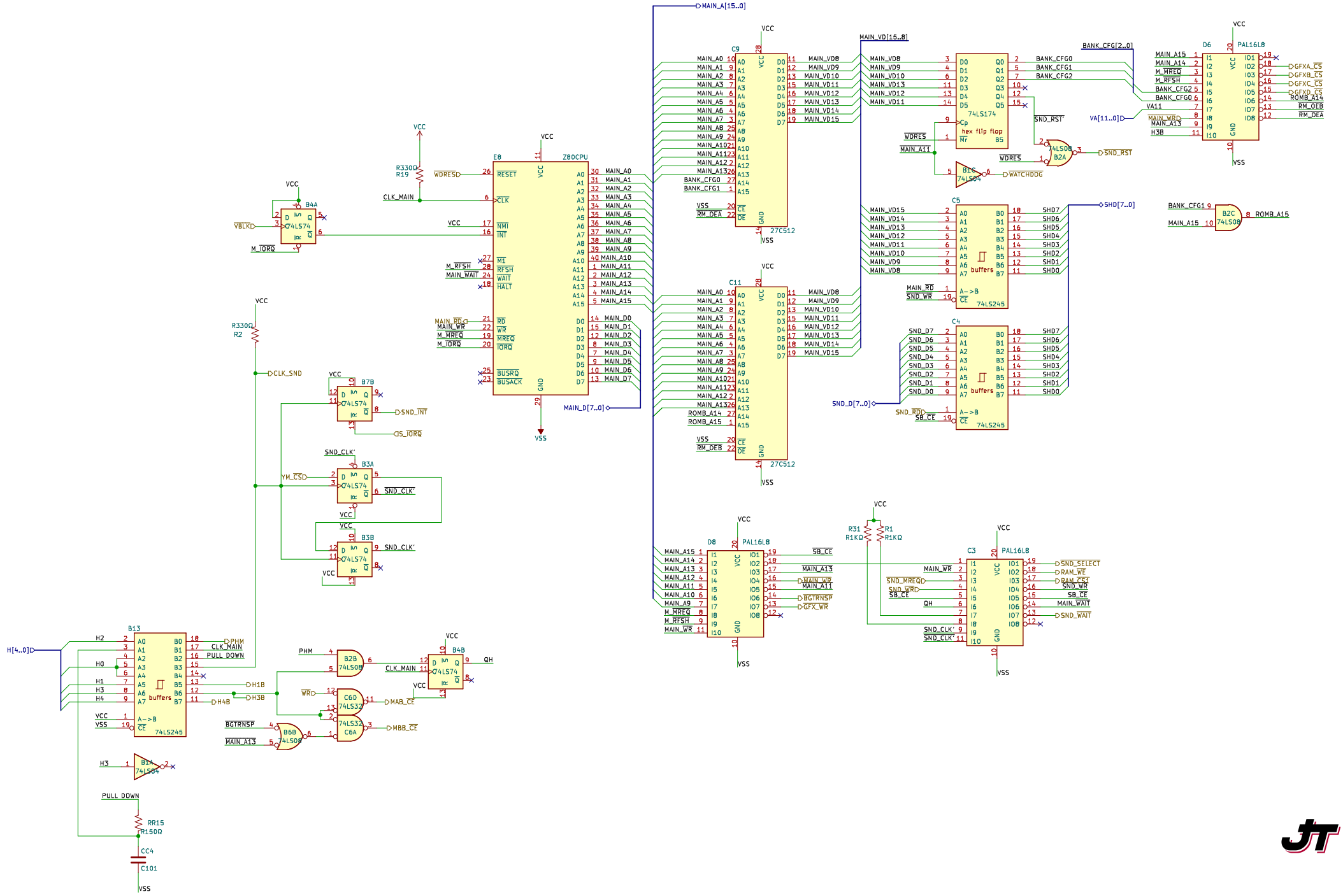

MAIN_A[15..0]
MAIN_VD[15..8]
MAIN_D[7..0]
SND_D[7..0]
SHD[7..0]
VA[11..0]
BANK_CFG[2..0]
VCC
VSS
E8
Z80CPU
C9
27C512
C11
27C512
C5
74LS245
C4
74LS245
D6
PAL16L8
D8
PAL16L8
C3
PAL16L8
B4A
74LS74
B7B
74LS74
B3A
74LS74
B3B
74LS74
B13
74LS245
B2B
74LS08
B4B
74LS74
B6B
74LS08
C6D
74LS32
C6A
74LS32
B1C
74LS04
B2A
74LS08
B2C
74LS08
B1A
74LS04
R330Ω
R19
R330Ω
R2
R31
R1KΩ
R1
R1KΩ
RR15
R150Ω
CC4
C101
H[4..0]
PULL DOWN
CLK_MAIN
WDRES
VBLK
M_IORQ
M_RFSH
MAIN_WAIT
M_MREQ
M_IORQ
CLK_SND
SND_INT
S_IORQ
SND_CLK'
YM_CS
PHM
QH
MAB_CE
MBB_CE
BGTRNSP
MAIN_A13
WR
SB_CE
MAIN_WR
SND_MREQ
SND_WR
SND_RST'
SND_RST
WATCHDDG
SND_RD
SND_SELECT
RAM_WE
RAM_CS1
SND_WAIT
GFXA_CS
GFXB_CS
GFXC_CS
GFXD_CS
ROMB_A14
RM_OEB
RM_OEA
ROMB_A15

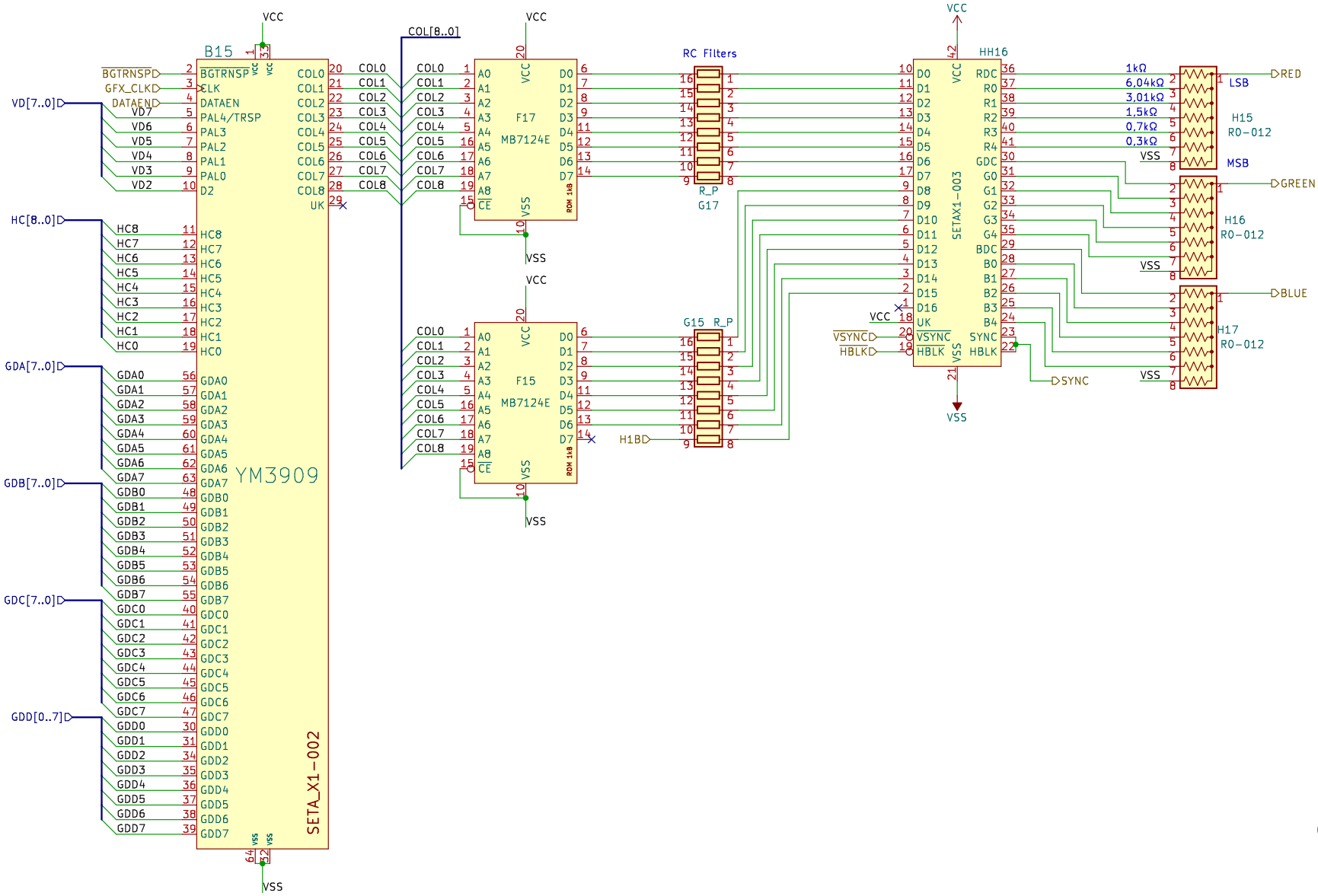
B15
YM3909
SETA_X1-002
F17
F15
MB7124E
ROM 1kB
HH16
SETAX1-003
RC Filters
R_P
G17
G15
H15
H16
H17
R0-012
LSB
MSB
1kΩ
6,04kΩ
3,01kΩ
1,5kΩ
0,7kΩ
0,3kΩ
RED
GREEN
BLUE
SYNC
VCC
VSS
COL[8..0]
VD[7..0]
HC[8..0]
GDA[7..0]
GDB[7..0]
GDC[7..0]
GDD[0..7]
BGTRNSP
GFX_CLK
DATAEND
VSYNC
HBLK
H1B

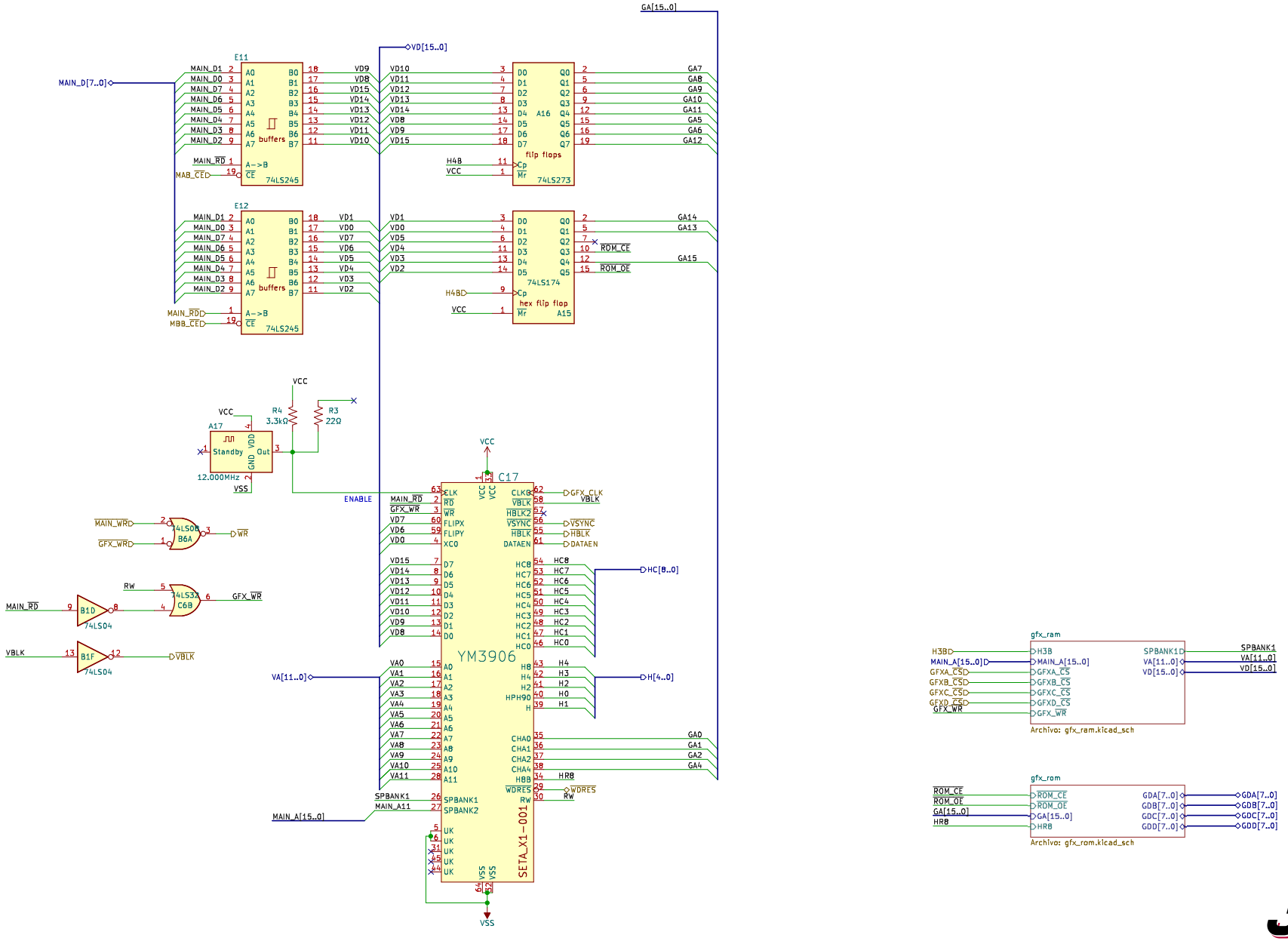
GA[15..0]
VD[15..0]
MAIN_D[7..0]
E11
E12
74LS245
buffers
74LS273
flip flops
74LS174
hex flip flop
A16
A15
H4B
H4BD
MAIN_RD
MAB_CED
MBB_CED
ROM_CE
ROM_OE
A17
Standby
12.000MHz
R4
3.3kΩ
R3
22Ω
ENABLE
C17
YM3906
SETA_X1-001
74LS08
74LS32
74LS04
B6A
C6B
B1D
B1F
MAIN_WR
GFX_WR
RW
VBLK
VA[11..0]
MAIN_A[15..0]
HC[8..0]
H[4..0]
GFX_CLK
VSYNC
HBLK
DATAEN
WDRES
SPBANK1
MAIN_A11
gfx_ram
gfx_ram.kicad_sch
gfx_rom
gfx_rom.kicad_sch
H3BD
GFXA_CS
GFXB_CS
GFXC_CS
GFXD_CS
SPBANK1D
GDA[7..0]
GDB[7..0]
GDC[7..0]
GDD[7..0]
HR8

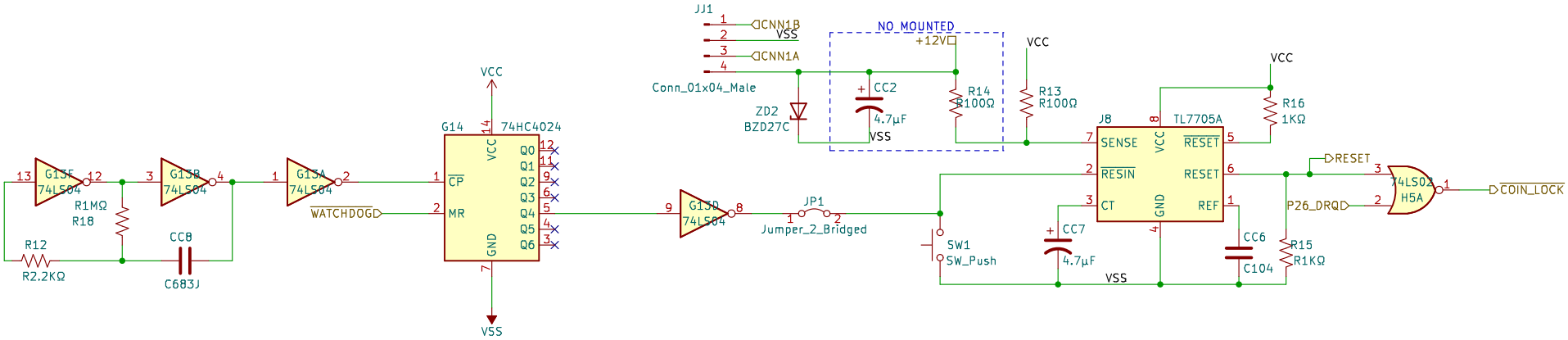
G13F
74LS04
G13B
74LS04
G13A
74LS04
R1MΩ
R18
R12
R2.2KΩ
CC8
C683J
WATCHDOG
G14
74HC4024
VCC
GND
CP
MR
Q0
Q1
Q2
Q3
Q4
Q5
Q6
G13D
74LS04
JP1
Jumper_2_Bridged
JJ1
CNN1B
VSS
CNN1A
Conn_01x04_Male
ZD2
BZD27C
NO_MOUNTED
+12V
CC2
4.7µF
R14
R100Ω
R13
R100Ω
J8
TL7705A
SENSE
RESIN
CT
VCC
GND
RESET
RESET
REF
R16
1KΩ
SW1
SW_Push
CC7
4.7µF
CC6
C104
R15
R1KΩ
RESET
P26_DRQD
74LS02
H5A
COIN_LOCK

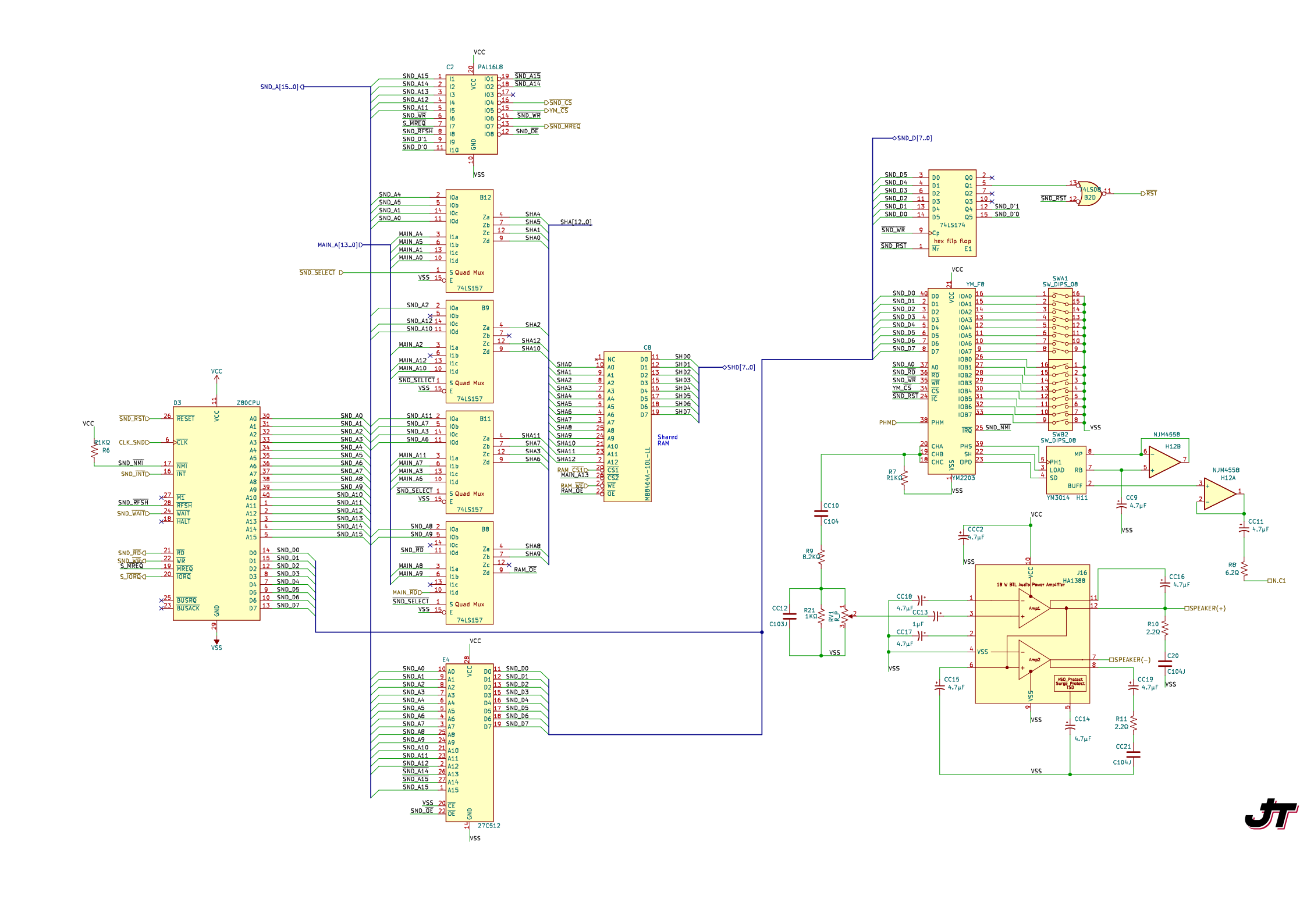
C2
PAL16L8
SND_A[15..0]
SND_CS
YM_CS
SND_WR
SND_MREQ
SND_OE
MAIN_A[13..0]
SND_SELECT
SHA[12..0]
74LS157
S Quad Mux
C8
MBB464A-10L-LL
Shared RAM
SHD[7..0]
D3
Z80CPU
RESET
CLK_SNDD
NMI
INT
M1
RFSH
WAIT
HALT
BUSRQ
BUSACK
RD
WR
MREQ
IORQ
E4
27C512
SND_D[7..0]
74LS174
hex flip flop
SND_RST
RST
SWA1
SW_DIPS_08
SWB2
YM_FB
YM2203
YM3014
NJM4558
HA1388
18 W BTL Audio Power Amplifier
SPEAKER(+)
SPEAKER(-)

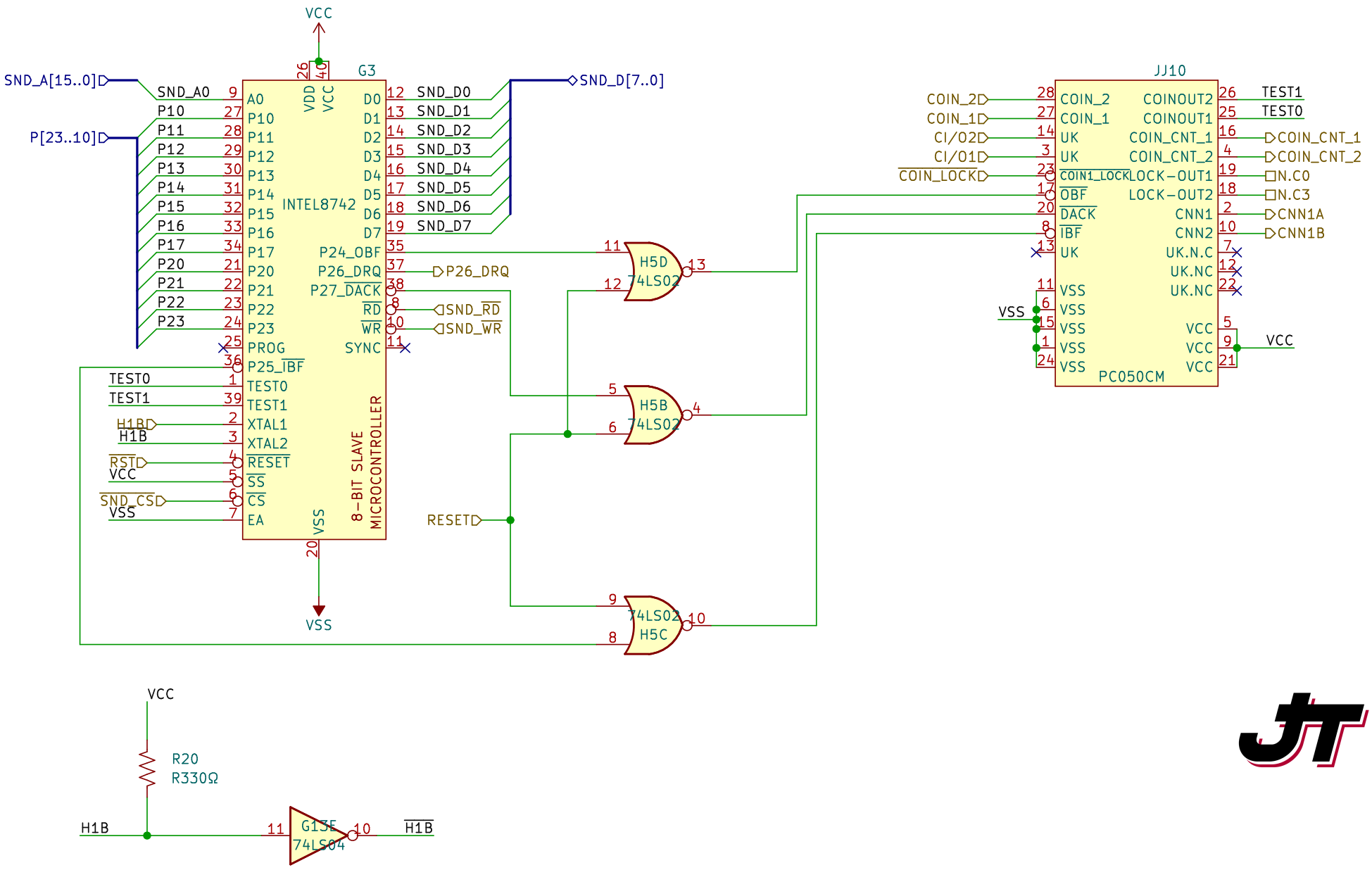
VCC
SND_A[15..0]
P[23..10]
SND_A0
P10
P11
P12
P13
P14
P15
P16
P17
P20
P21
P22
P23
G3
INTEL8742
8-BIT SLAVE MICROCONTROLLER
SND_D0
SND_D1
SND_D2
SND_D3
SND_D4
SND_D5
SND_D6
SND_D7
SND_D[7..0]
P24_OBF
P26_DRQ
P27_DACK
RD
WR
SYNC
SND_RD
SND_WR
PROG
P25_IBF
TEST0
TEST1
XTAL1
XTAL2
RESET
SS
CS
EA
VDD
VSS
H1B
RST
SND_CS
H5D
H5B
H5C
74LS02
RESET
JJ10
COIN_2
COIN_1
CI/O2
CI/O1
COIN_LOCK
COIN1_LOCK
OBF
DACK
IBF
UK
COINOUT2
COINOUT1
COIN_CNT_1
COIN_CNT_2
LOCK-OUT1
LOCK-OUT2
CNN1
CNN2
UK.N.C
UK.NC
PC050CM
TEST1
TEST0
N.C0
N.C3
CNN1A
CNN1B
R20
R330Ω
G13E
74LS04

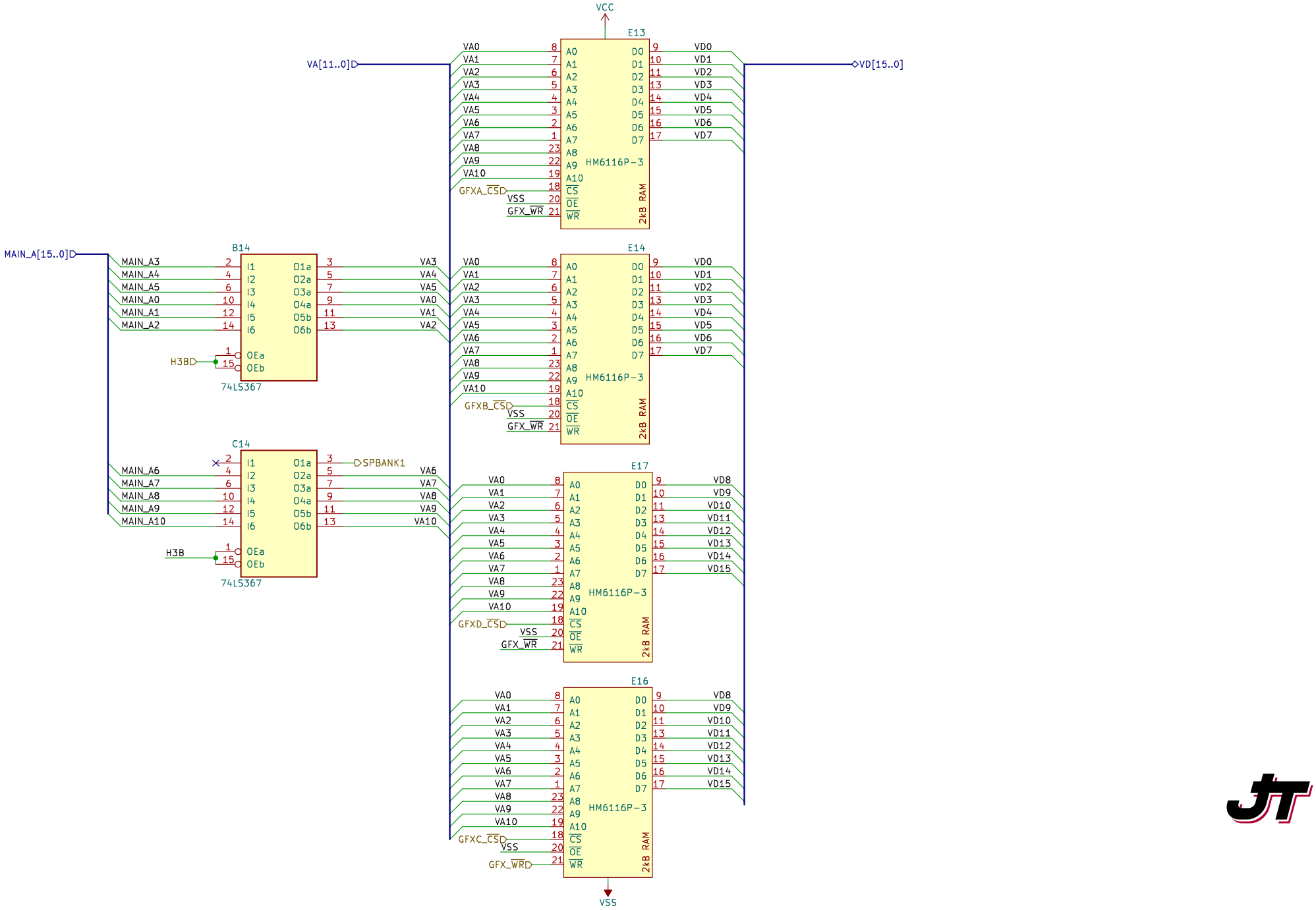
VCC
VA[11..0]
VD[15..0]
MAIN_A[15..0]
E13
E14
E17
E16
B14
C14
HM6116P-3
2kB RAM
74LS367
H3B
SPBANK1
GFXA_CSD
GFXB_CSD
GFXD_CSD
GFXC_CSD
GFX_WR
VSS

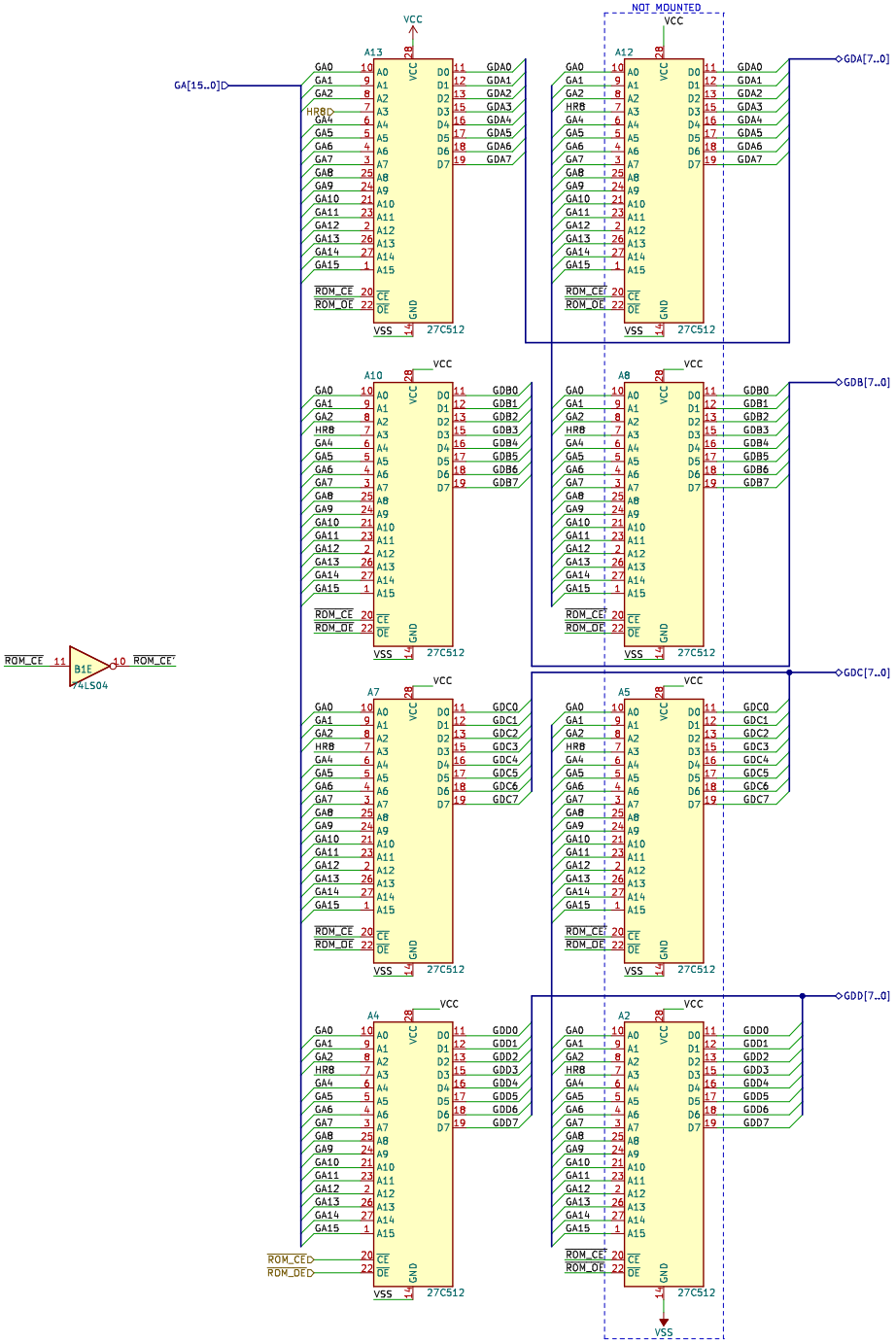
NOT MOUNTED
A13
A12
A10
A8
A7
A5
A4
A2
27C512
VCC
VSS
GND
GA[15..0]
GDA[7..0]
GDB[7..0]
GDC[7..0]
GDD[7..0]
ROM_CE
ROM_OE
ROM_CED
ROM_DED
ROM_CE'
B1E
74LS04