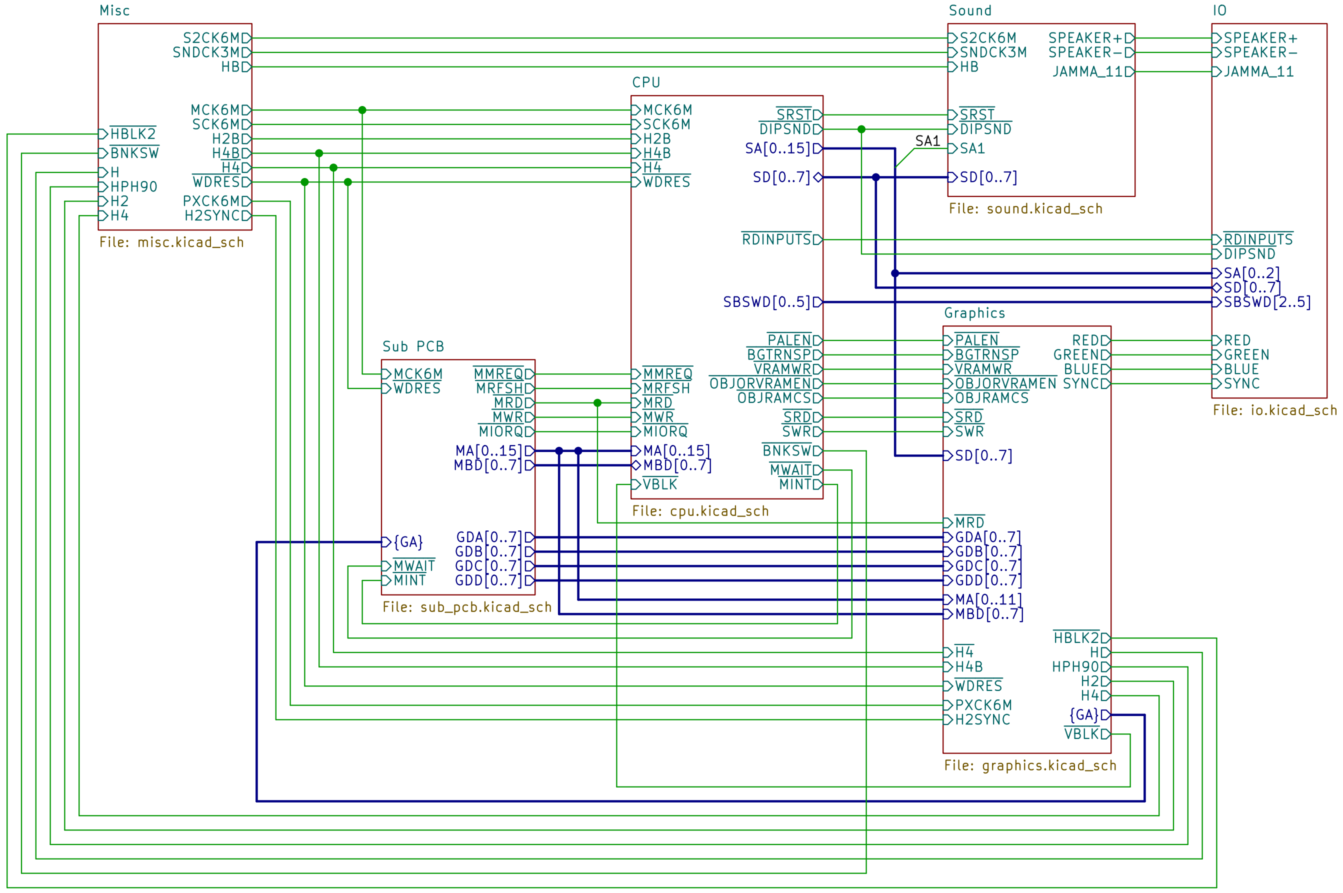
Misc
S2CK6M
SNDCK3M
HB
MCK6M
SCK6M
H2B
H4B
H4
WDRES
PXCK6M
H2SYNC
HBLK2
BNKSW
H
HPH90
H2
H4
File: misc.kicad_sch
CPU
MCK6M
SCK6M
H2B
H4B
H4
WDRES
SRST
DIPSND
SA[0..15]
SD[0..7]
RDINPUTS
SBSWD[0..5]
PALEN
BGTRNSP
VRAMWR
OBJORVRAMEN
OBJRAMCS
SRD
SWR
BNKSW
MWAIT
MINT
MMREQ
MRFSH
MRD
MWR
MIORQ
MA[0..15]
MBD[0..7]
VBLK
File: cpu.kicad_sch
SA1
Sound
S2CK6M
SNDCK3M
HB
SRST
DIPSND
SA1
SD[0..7]
SPEAKER+
SPEAKER-
JAMMA_11
File: sound.kicad_sch
IO
SPEAKER+
SPEAKER-
JAMMA_11
RDINPUTS
DIPSND
SA[0..2]
SD[0..7]
SBSWD[2..5]
RED
GREEN
BLUE
SYNC
File: io.kicad_sch
Sub PCB
MCK6M
WDRES
MMREQ
MRFSH
MRD
MWR
MIORQ
MA[0..15]
MBD[0..7]
{GA}
MWAIT
MINT
GDA[0..7]
GDB[0..7]
GDC[0..7]
GDD[0..7]
File: sub_pcb.kicad_sch
Graphics
PALEN
BGTRNSP
VRAMWR
OBJORVRAMEN
OBJRAMCS
SRD
SWR
SD[0..7]
MRD
GDA[0..7]
GDB[0..7]
GDC[0..7]
GDD[0..7]
MA[0..11]
MBD[0..7]
H4
H4B
WDRES
PXCK6M
H2SYNC
RED
GREEN
BLUE
SYNC
HBLK2
H
HPH90
H2
H4
{GA}
VBLK
File: graphics.kicad_sch

Note: The reference designator refers to the
position on the PCB. If the reference designator
already exists the letter is doubled. I.e. C1
-> CC1.

Ulf Skutnabba, twitter @skutis77
Sheet: /
File: tnzs.kicad_sch
Title: The NewZealand Story - P0-043A
Size: A3 Date: 2022-11-16 **Rev:**
KiCad E.D.A. kicad 6.0.2+dfsg-1 Id: 1/7

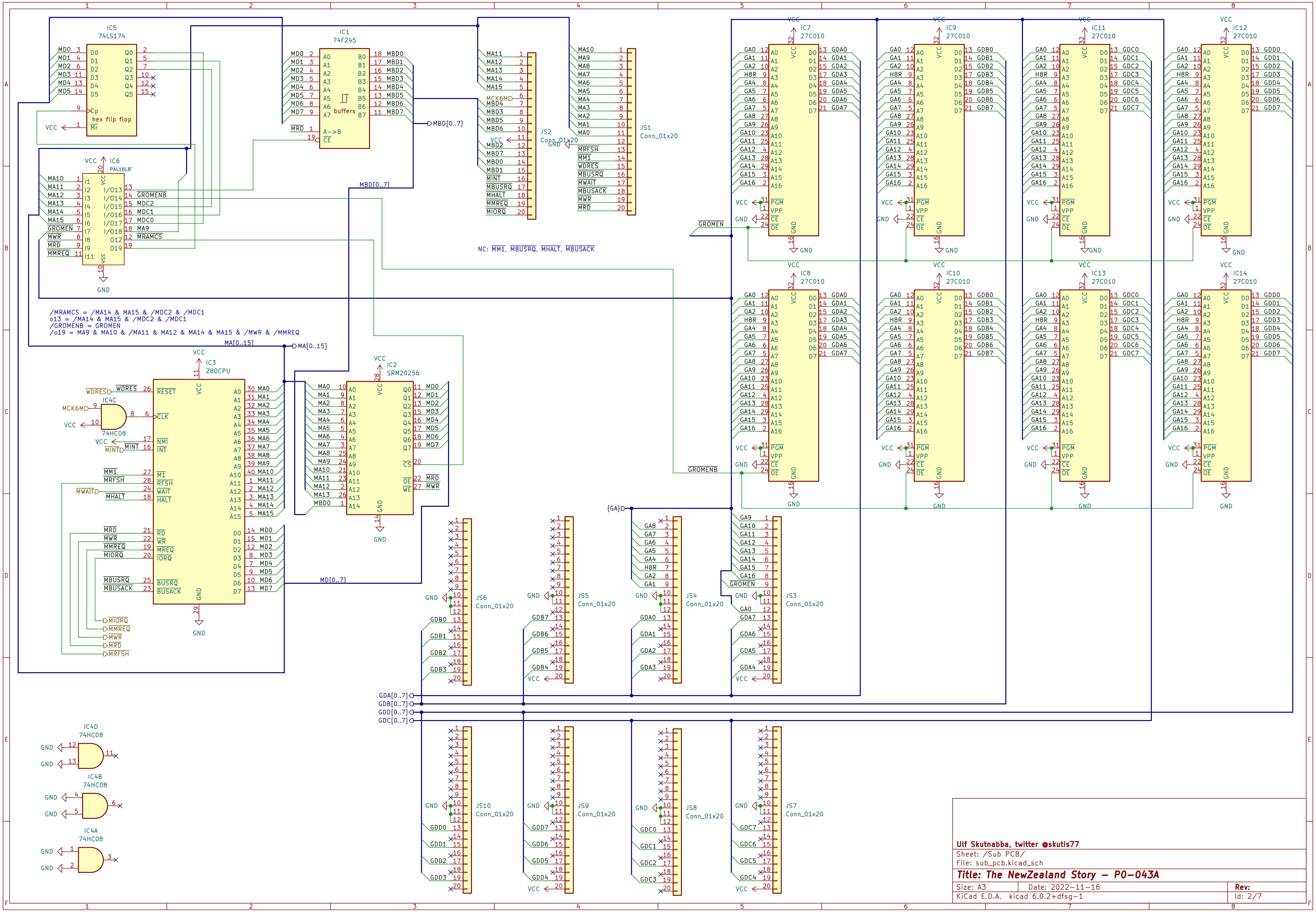
IC5
74LS174
hex flip flop
IC1
74F245
buffers
IC6
PAL16L8'
IC3
Z80CPU
IC2
SRM20256
IC4C
74HC08
IC4D
74HC08
IC4B
74HC08
IC4A
74HC08
IC7
27C010
IC8
27C010
IC9
27C010
IC10
27C010
IC11
27C010
IC12
27C010
IC13
27C010
IC14
27C010
JS1
Conn_01x20
JS2
Conn_01x20
JS3
Conn_01x20
JS4
Conn_01x20
JS5
Conn_01x20
JS6
Conn_01x20
JS7
Conn_01x20
JS8
Conn_01x20
JS9
Conn_01x20
JS10
Conn_01x20
MBD[0..7]
MA[0..15]
MD[0..7]
{GA}
GDA[0..7]
GDB[0..7]
GDD[0..7]
GDC[0..7]
GROMEN
GROMENB
WDRES
MCK6M
MINT
MWAIT
MIORQ
MMREQ
MWR
MRD
MRFSH
VCC
GND

NC: $\overline{\text{MM1}}$, $\overline{\text{MBUSRQ}}$, $\overline{\text{MHALT}}$, $\overline{\text{MBUSACK}}$

/MRAMCS = /MA14 & MA15 & /MDC2 & /MDC1
o13 = /MA14 & MA15 & /MDC2 & /MDC1
/GROMENB = GROMEN
/o19 = MA9 & MA10 & /MA11 & MA12 & MA14 & MA15 & /MWR & /MMREQ

Ulf Skutnabba, twitter @skutis77
Sheet: /Sub PCB/
File: sub_pcb.kicad_sch

Title: The NewZealand Story – PO-043A

Size: A3 Date: 2022-11-16 Rev:
KiCad E.D.A. kicad 6.0.2+dfsg-1 Id: 2/7

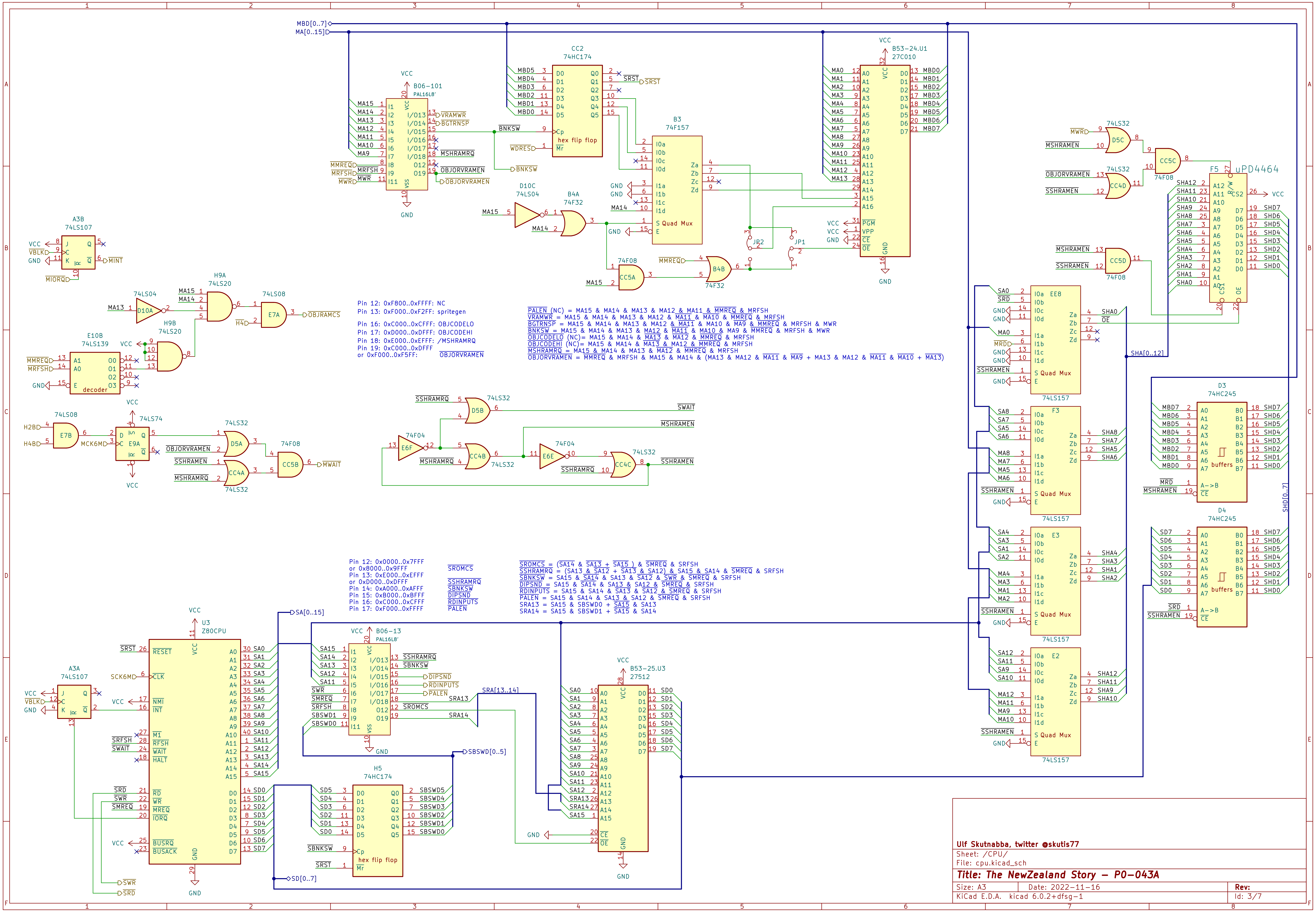
MBD[0..7]
MA[0..15]
B06-101
PAL16L8'
CC2
74HC174
hex flip flop
B3
74F157
Quad Mux
B53-24.U1
27C010
uPD4464
F5
A3B
74LS107
H9A
74LS20
H9B
E10B
74LS139
decoder
D10C
74LS04
B4A
74F32
CC5A
74F08
B4B
E7A
74LS08
D10A
E7B
E9A
74LS74
D5A
74LS32
CC4A
CC5B
D5B
E6F
74F04
CC4B
E6E
CC4C
D5C
CC5C
CC4D
CC5D
EE8
74LS157
F3
E3
E2
D3
74HC245
D4
buffers
A->B
SHA[0..12]
SHD[0..7]
U3
Z80CPU
A3A
SA[0..15]
B06-13
SRA[13..14]
SBSWD[0..5]
H5
B53-25.U3
27512
SD[0..7]
JP1
JP2
VCC
GND

Pin 12: 0xF800..0xFFFF: NC
Pin 13: 0xF000..0xF2FF: spritegen

Pin 16: 0xC000..0xCFFF: OBJCODELO
Pin 17: 0xD000..0xDFFF: OBJCODEHI
Pin 18: 0xE000..0xEFFF: /MSHRAMRQ
Pin 19: 0xC000..0xDFFF
or 0xF000..0xF5FF: OBJORVRAMEN

PALEN (NC) = MA15 & MA14 & MA13 & MA12 & MA11 & MMREQ & MRFSH
VRAMWR = MA15 & MA14 & MA13 & MA12 & MA11 & MA10 & MMREQ & MRFSH
BGTRNSP = MA15 & MA14 & MA13 & MA12 & MA11 & MA10 & MA9 & MMREQ & MRFSH & MWR
BNKSW = MA15 & MA14 & MA13 & MA12 & MA11 & MA10 & MA9 & MMREQ & MRFSH & MWR
OBJCODELO (NC)= MA15 & MA14 & MA13 & MA12 & MMREQ & MRFSH
OBJCODEHI (NC)= MA15 & MA14 & MA13 & MA12 & MMREQ & MRFSH
MSHRAMRQ = MA15 & MA14 & MA13 & MA12 & MMREQ & MRFSH
OBJORVRAMEN = MMREQ & MRFSH & MA15 & MA14 & (MA13 & MA12 & MA11 & MA9 + MA13 & MA12 & MA11 & MA10 + MA13)

Pin 12: 0x0000..0x7FFF
or 0x8000..0x9FFF SROMCS
Pin 13: 0xE000..0xEFFF
or 0xD000..0xDFFF SSHRAMRQ
Pin 14: 0xA000..0xAFFF SBNKSW
Pin 15: 0xB000..0xBFFF DIPSND
Pin 16: 0xC000..0xCFFF RDINPUTS
Pin 17: 0xF000..0xFFFF PALEN

SROMCS = (SA14 & SA13 + SA15) & SMREQ & SRFSH
SSHRAMRQ = (SA13 & SA12 + SA13 & SA12) & SA15 & SA14 & SMREQ & SRFSH
SBNKSW = SA15 & SA14 & SA13 & SA12 & SWR & SMREQ & SRFSH
DIPSND = SA15 & SA14 & SA13 & SA12 & SMREQ & SRFSH
RDINPUTS = SA15 & SA14 & SA13 & SA12 & SMREQ & SRFSH
PALEN = SA15 & SA14 & SA13 & SA12 & SMREQ & SRFSH
SRA13 = SA15 & SBSWD0 + SA15 & SA13
SRA14 = SA15 & SBSWD1 + SA15 & SA14

Ulf Skutnabba, twitter @skutis77
Sheet: /CPU/
File: cpu.kicad_sch
Title: The NewZealand Story – P0-043A
Size: A3 Date: 2022-11-16 **Rev:**
KiCad E.D.A. kicad 6.0.2+dfsg-1 Id: 3/7

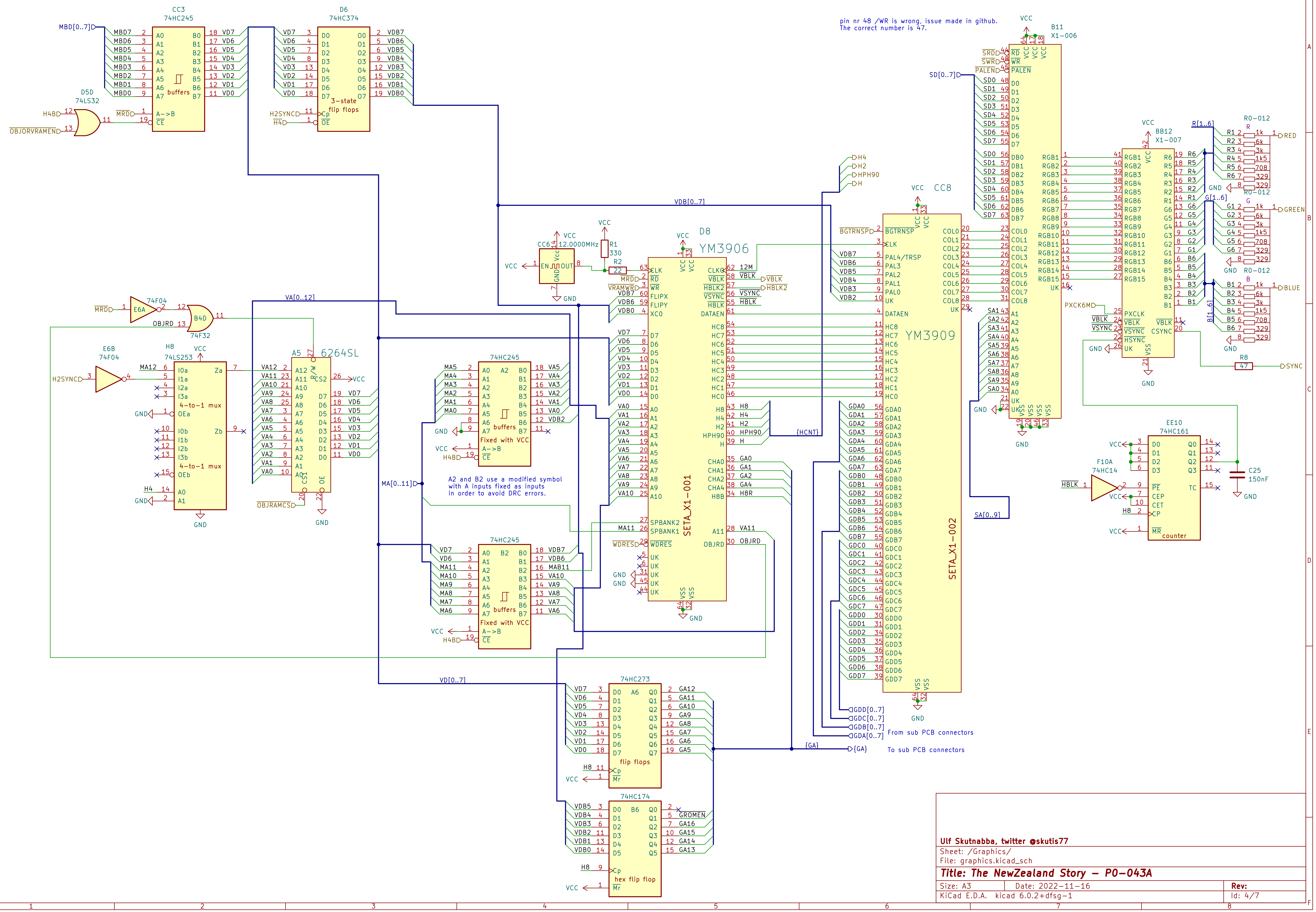
CC3
74HC245
buffers
A->B
D6
74HC374
3-state
flip flops
D5D
74LS32
H4B
OBJORVRAMEND
MBD[0..7]
MRD
H2SYNC
H4
VDB[0..7]
VA[0..12]
74F04
E6A
B4D
74F32
OBJRD
E6B
74F04
H8
74LS253
4-to-1 mux
MA12
A5
6264SL
OBJRAMCS
74HC245
Fixed with VCC
MA[0..11]
VD[0..7]
74HC273
A6
flip flops
74HC174
B6
hex flip flop
GROMEN
CC6
12.0000MHz
R1
330
R2
22
D8
YM3906
SETA_X1-001
MRD
VRAMWR
WDRESD
CC8
YM3909
SETA_X1-002
BGTRNSP
HCNT
{GA}
GDD[0..7]
GDC[0..7]
GDB[0..7]
GDA[0..7]
SD[0..7]
SRD
SWR
PALEN
B11
X1-006
BB12
X1-007
PXCK6M
VBLK
VSYNC
HBLK
R[1..6]
G[1..6]
B[1..6]
R0-012
RED
GREEN
BLUE
R8
47
SYNC
EE10
74HC161
counter
F10A
74HC14
C25
150nF
SA[0..9]
VCC
GND

pin nr 48 /WR is wrong, issue made in github.
The correct number is 47.

A2 and B2 use a modified symbol
with A inputs fixed as inputs
in order to avoid DRC errors.

From sub PCB connectors

To sub PCB connectors

Ulf Skutnabba, twitter @skutis77
Sheet: /Graphics/
File: graphics.kicad_sch

Title: The NewZealand Story - P0-043A

Size: A3 Date: 2022-11-16 Rev:
KiCad E.D.A. kicad 6.0.2+dfsg-1 Id: 4/7

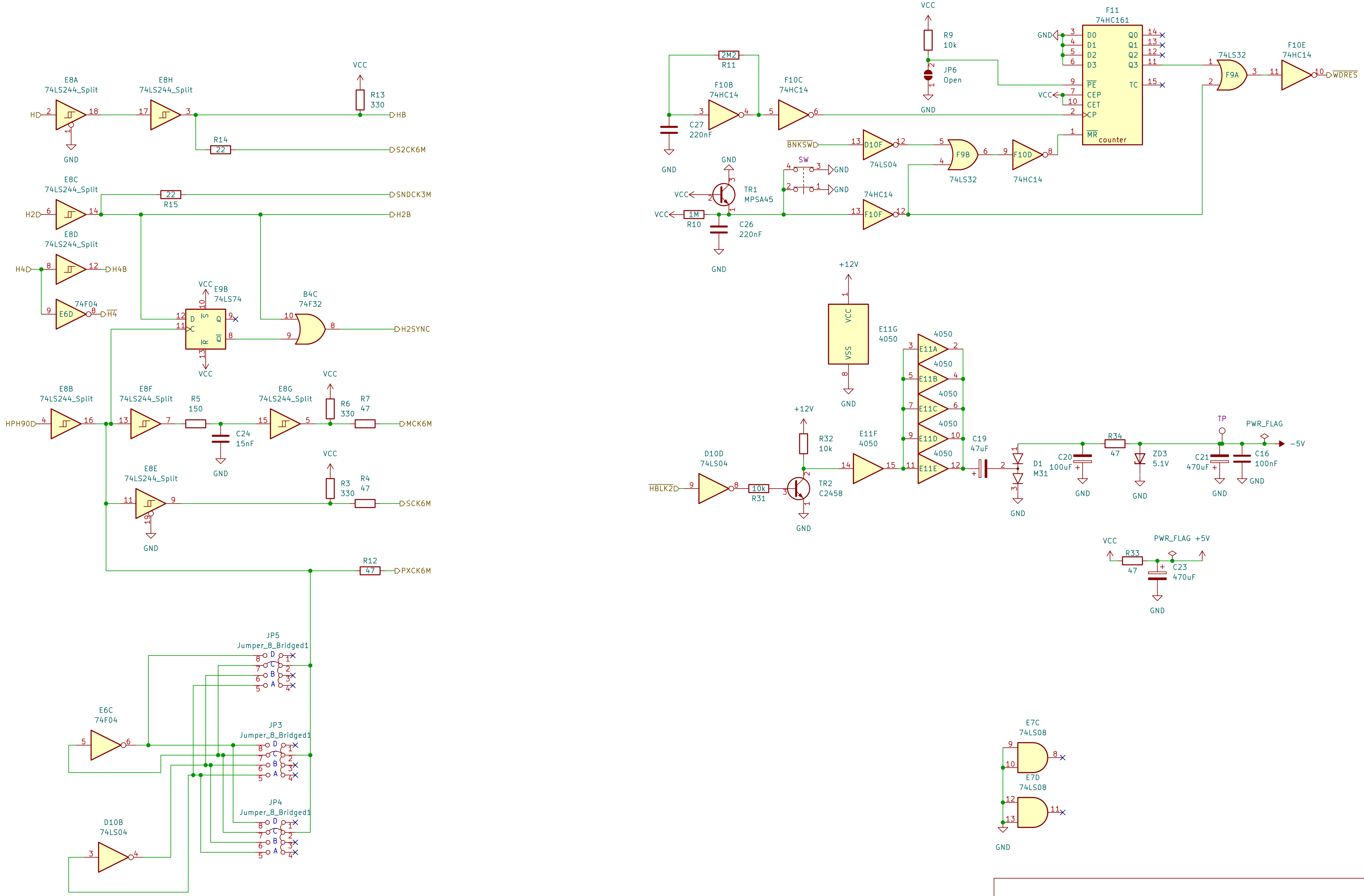
E8A
74LS244_Split
HD
GND
E8H
74LS244_Split
VCC
R13
330
HB
R14
22
S2CK6M
E8C
74LS244_Split
H2D
22
R15
SNDCK3M
H2B
E8D
74LS244_Split
H4D
H4B
74F04
E6D
H4
E9B
74LS74
B4C
74F32
H2SYNC
E8B
74LS244_Split
HPH90D
E8F
74LS244_Split
R5
150
C24
15nF
E8G
74LS244_Split
R6
330
R7
47
MCK6M
E8E
74LS244_Split
R3
330
R4
47
SCK6M
R12
47
PXCK6M
JP5
Jumper_8_Bridged1
E6C
74F04
JP3
Jumper_8_Bridged1
JP4
Jumper_8_Bridged1
D10B
74LS04
2M2
R11
F10B
74HC14
F10C
74HC14
C27
220nF
R9
10k
JP6
Open
F11
74HC161
D0
D1
D2
D3
PE
CEP
CET
CP
MR
counter
Q0
Q1
Q2
Q3
TC
74LS32
F9A
F10E
74HC14
WDRES
BNKSW
D10F
74LS04
F9B
74LS32
F10D
74HC14
SW
TR1
MPSA45
R10
1M
C26
220nF
74HC14
F10F
+12V
E11G
4050
VCC
VSS
E11A
E11B
E11C
E11D
E11E
E11F
4050
C19
47uF
D1
M31
C20
100uF
R34
47
ZD3
5.1V
TP
PWR_FLAG
C21
470uF
C16
100nF
-5V
+12V
R32
10k
TR2
C2458
D10D
74LS04
HBLK2
10k
R31
R33
47
PWR_FLAG
+5V
C23
470uF
E7C
74LS08
E7D
74LS08
GND

Ulf Skutnabba, twitter @skutis77
Sheet: /Misc/
File: misc.kicad_sch

Title: The NewZealand Story - P0-043A

Size: A3 Date: 2022-11-16 **Rev:**
KiCad E.D.A. kicad 6.0.2+dfsg-1 Id: 5/7

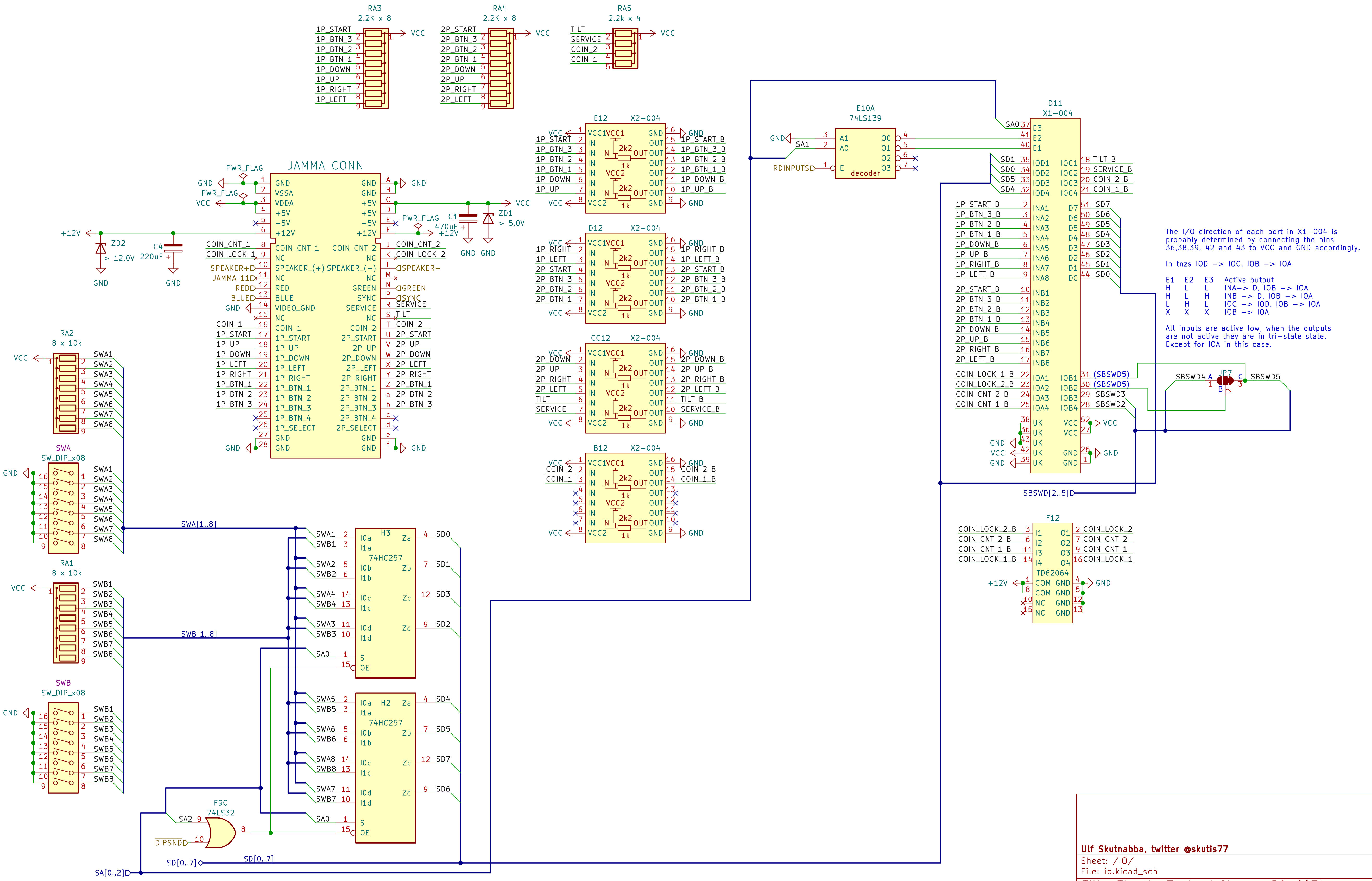
RA3 2.2K x 8
RA4 2.2K x 8
RA5 2.2k x 4
JAMMA_CONN
PWR_FLAG
ZD2 12.0V
C4 220uF
C1 470uF
ZD1 5.0V
E12 X2-004
D12 X2-004
CC12 X2-004
B12 X2-004
E10A 74LS139 decoder
D11 X1-004
F12 TD62064
RA2 8 x 10k
SWA SW_DIP_x08
RA1 8 x 10k
SWB SW_DIP_x08
H3 74HC257
H2 74HC257
F9C 74LS32
JP7
SWA[1..8]
SWB[1..8]
SA[0..2]
SD[0..7]
SBSWD[2..5]
RDINPUTS
DIPSND
VCC
GND
+12V

The I/O direction of each port in X1-004 is
probably determined by connecting the pins
36,38,39, 42 and 43 to VCC and GND accordingly.

In tnzs IOD -> IOC, IOB -> IOA

E1	E2	E3	Active output
H	L	L	INA-> D, IOB -> IOA
H	L	H	INB -> D, IOB -> IOA
L	H	L	IOC -> IOD, IOB -> IOA
X	X	X	IOB -> IOA

All inputs are active low, when the outputs
are not active they are in tri-state state.
Except for IOA in this case.

Ulf Skutnabba, twitter @skutis77
Sheet: /IO/
File: io.kicad_sch
Title: The NewZealand Story - P0-043A
Size: A3
Date: 2022-11-16
Rev:
KiCad E.D.A. kicad 6.0.2+dfsg-1
Id: 6/7

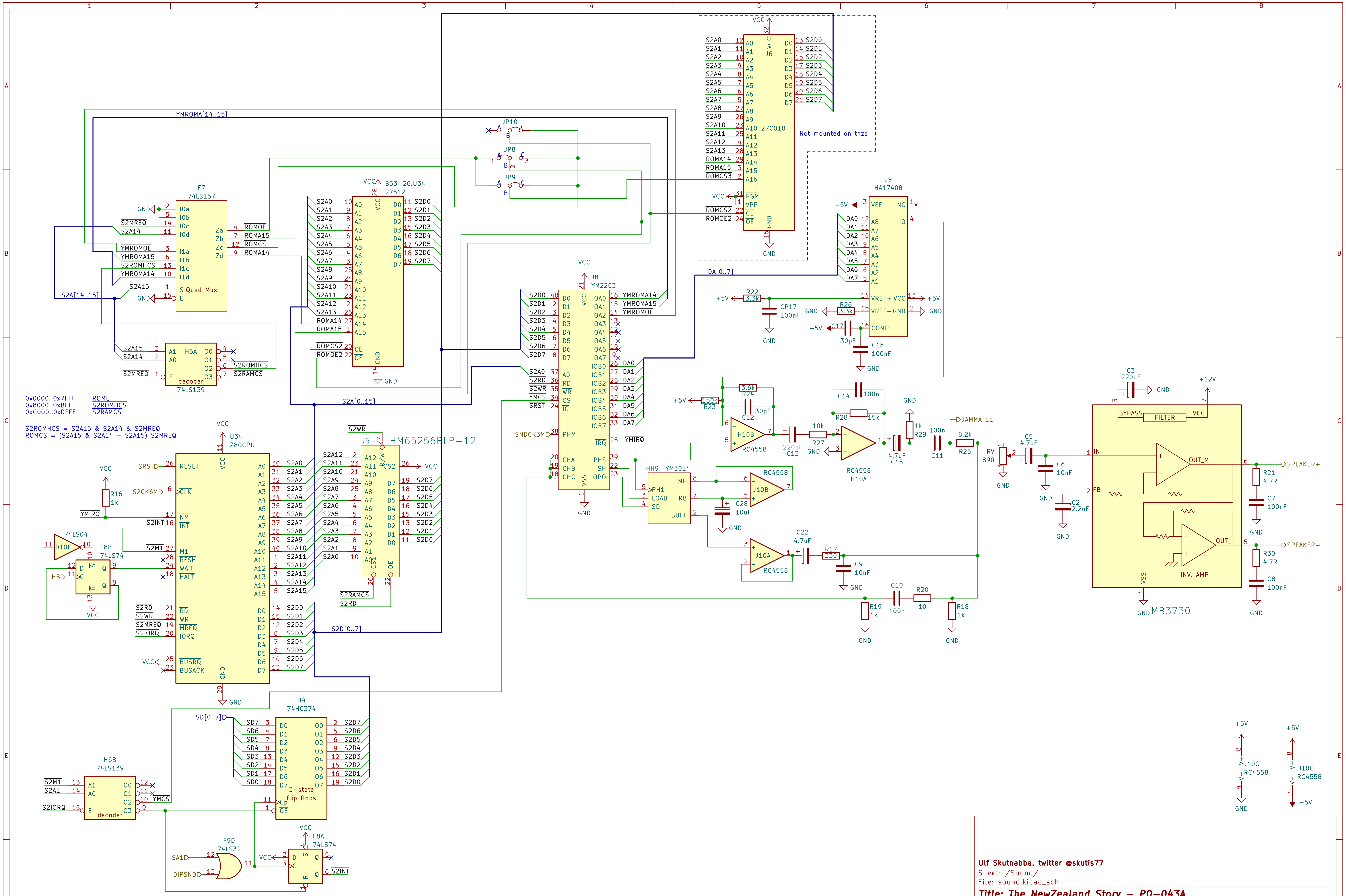
F7
74LS157
S Quad Mux
ROMOE
ROMA15
ROMCS
ROMA14
YMROMOE
YMROMA15
S2ROMHCS
YMROMA14
S2MREQ
S2A14
S2A15
YMROMA[14..15]
S2A[14..15]
H6A
74LS139
decoder
S2ROMHCS
S2RAMCS
0x0000..0x7FFF ROML
0x8000..0xBFFF S2ROMHCS
0xC000..0xDFFF S2RAMCS
S2ROMHCS = S2A15 & S2A14 & S2MREQ
ROMCS = (S2A15 & S2A14 + S2A15) S2MREQ
B53-26.U34
27512
JP10
JP8
JP9
J6
27C010
Not mounted on tnzs
ROMCS2
ROMOE2
ROMCS3
J9
HA17408
VEE
NC
VREF+
VREF−
COMP
DA[0..7]
J8
YM2203
YMIRQ
SNDCK3MD
CHA
CHB
CHC
PHM
PHS
SH
OPO
U34
Z80CPU
RESET
CLK
NMI
INT
M1
RFSH
WAIT
HALT
RD
WR
MREQ
IORQ
BUSRQ
BUSACK
SRST
S2CK6M
R16
1k
YMIRQ
S2INT
74LS04
D10E
F8B
74LS74
HBD
J5
HM65256BLP-12
S2A[0..15]
S2D[0..7]
H4
74HC374
3-state flip flops
SD[0..7]
H6B
74LS139
decoder
YMCS
S2M1
S2A1
S2IORQ
F9D
74LS32
SA1
DIPSND
F8A
74LS74
S2INT
HH9
YM3014
MP
RB
BUFF
PH1
LOAD
SD
J10B
RC4558
C28
10uF
J10A
C22
4.7uF
R17
330
C9
10nF
C10
100n
R20
10
R19
1k
R18
1k
R22
3.3k
CP17
100nF
R26
3.3k
C17
30pF
C18
100nF
R24
3.6k
R23
150k
C12
30pF
H10B
C13
220uF
R27
10k
C14
100n
R28
15k
H10A
R29
1k
C15
4.7uF
C11
100n
R25
8.2k
JAMMA_11
RV
890
C5
4.7uF
C6
10nF
C2
2.2uF
C3
220uF
+12V
BYPASS
FILTER
VCC
IN
FB
OUT_M
OUT_I
INV. AMP
VSS
MB3730
R21
4.7R
C7
100nF
R30
4.7R
C8
100nF
SPEAKER+
SPEAKER−
J10C
RC4558
H10C
RC4558
+5V
−5V
GND
VCC

Ulf Skutnabba, twitter @skutis77

Sheet: /Sound/

File: sound.kicad_sch

Title: The NewZealand Story - P0-043A

Size: A3	Date: 2022-11-16	Rev:
KiCad E.D.A. kicad 6.0.2+dfsg-1		Id: 7/7