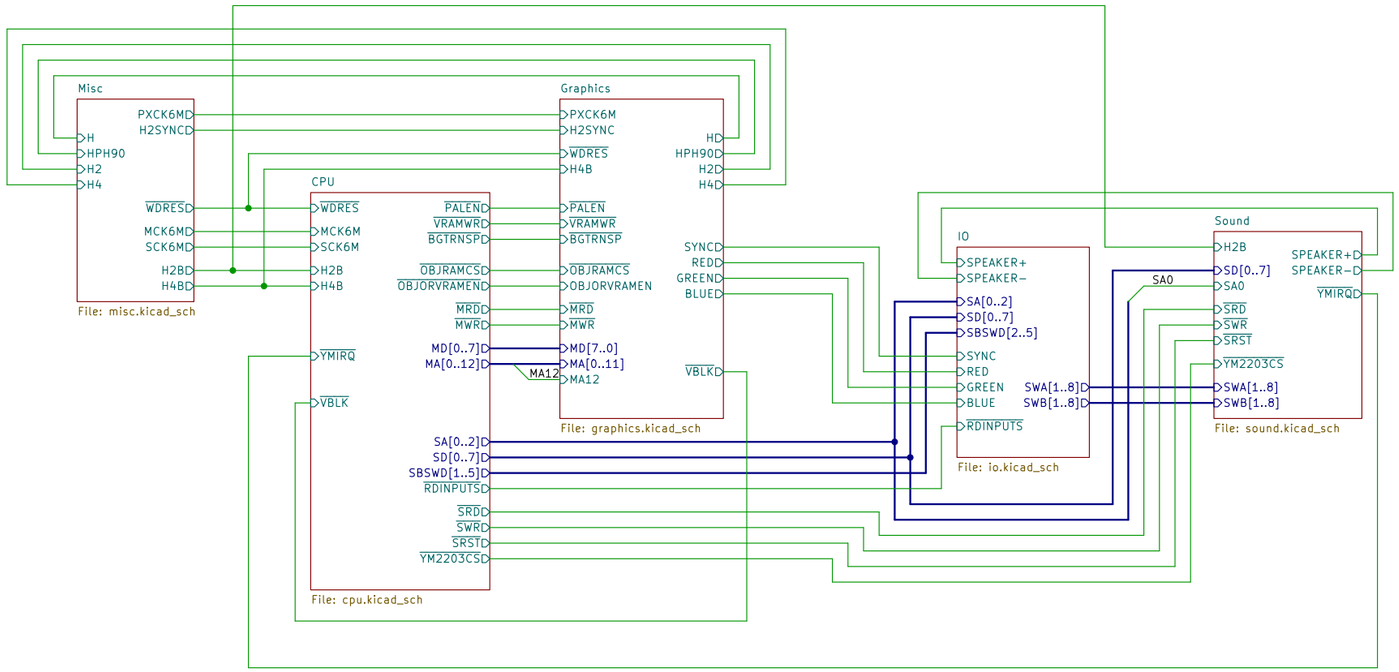

Ulf Skutnabba, twitter: @skutis77

Sheet: /
File: insectx.kicad_sch

Title: Insector X – P0–056A

Size: A3	Date: 2022–11–14	**Rev:**
KiCad E.D.A. kicad 6.0.2+dfsg–1		Id: 1/6

U26-B06-12
SWAIT = SBSWD1 & /i11 & (/SSHRAMEN + SSHRAMRQ)
MWAIT = (OBJORVRAMEN + i6) & SSHRAMEN
SSHRAMEN = SSHRAMRQ + /MASHRAMRQ & SSHRAMEN
MSHRAMEN = MASHRAMRQ + /SSHRAMRQ & MSHRAMEN
SHRAMCS = MSHRAMRQ & SSHRAMRQ
SHRAMWR = MWR & SSHRAMEN + MASHRAMRQ & SSHRAMRQ + SWR & MSHRAMEN
SSHRAMENB = SSHRAMEN

RAM
Not mounted
Shared RAM
{SHRAM2}

Ulf Skutnabba, twitter: @skutis77
Sheet: /CPU/
File: cpu.kicad_sch
Title: Insector X – P0–056A
Size: A3 | Date: 2022–11–14 | Rev:
KiCad E.D.A. kicad 6.0.2+dfsg–1 | Id: 2/6

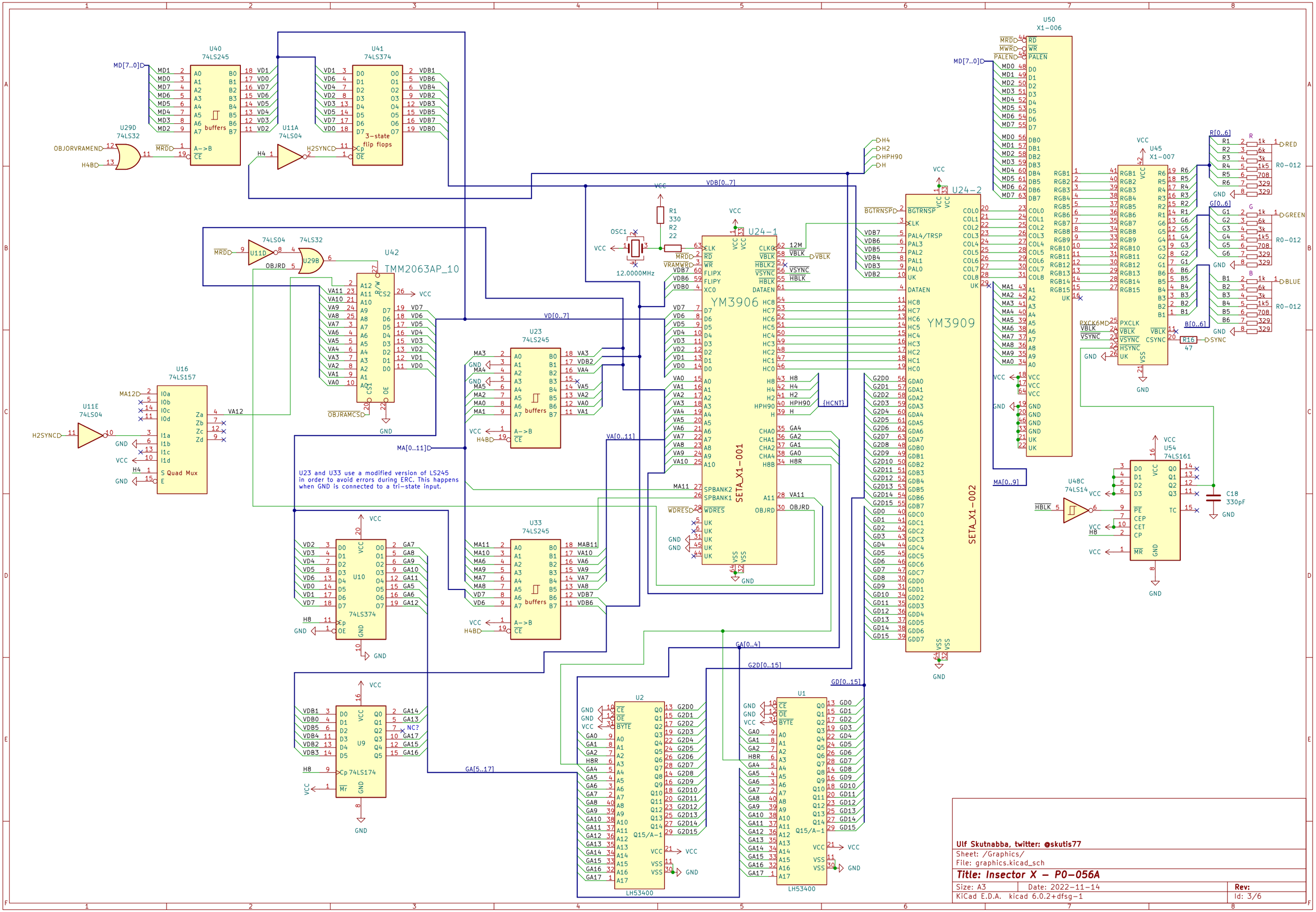
U40
74LS245
U41
74LS374
U29D
74LS32
U11A
74LS04
U42
TMM2063AP_10
U16
74LS157
U11E
74LS04
U23
74LS245
U33
74LS245
U10
74LS374
U9
74LS174
U24-1
YM3906
SETA_X1-001
U24-2
YM3909
SETA_X1-002
U50
X1-006
U45
X1-007
U54
74LS161
U48C
74LS14
U2
LH53400
U1
LH53400
OSC1
12.0000MHz
R1
330
R2
22
U23 and U33 use a modified version of LS245 in order to avoid errors during ERC. This happens when GND is connected to a tri-state input.
Ulf Skutnabba, twitter: @skutis77
Sheet: /Graphics/
File: graphics.kicad_sch
Title: Insector X – P0-056A
Size: A3
Date: 2022-11-14
Rev:
KiCad E.D.A. kicad 6.0.2+dfsg-1
Id: 3/6

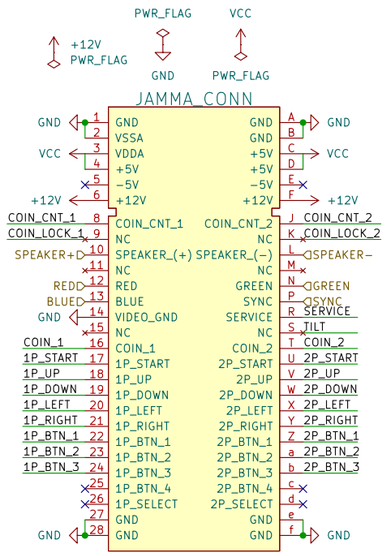

Ulf Skutnabba, twitter: @skutis77

Sheet: /IO/
File: io.kicad_sch

Title: Insector X – P0-056A

Size: A3	Date: 2022-11-14	**Rev:**
KiCad E.D.A. kicad 6.0.2+dfsg-1		Id: 4/6

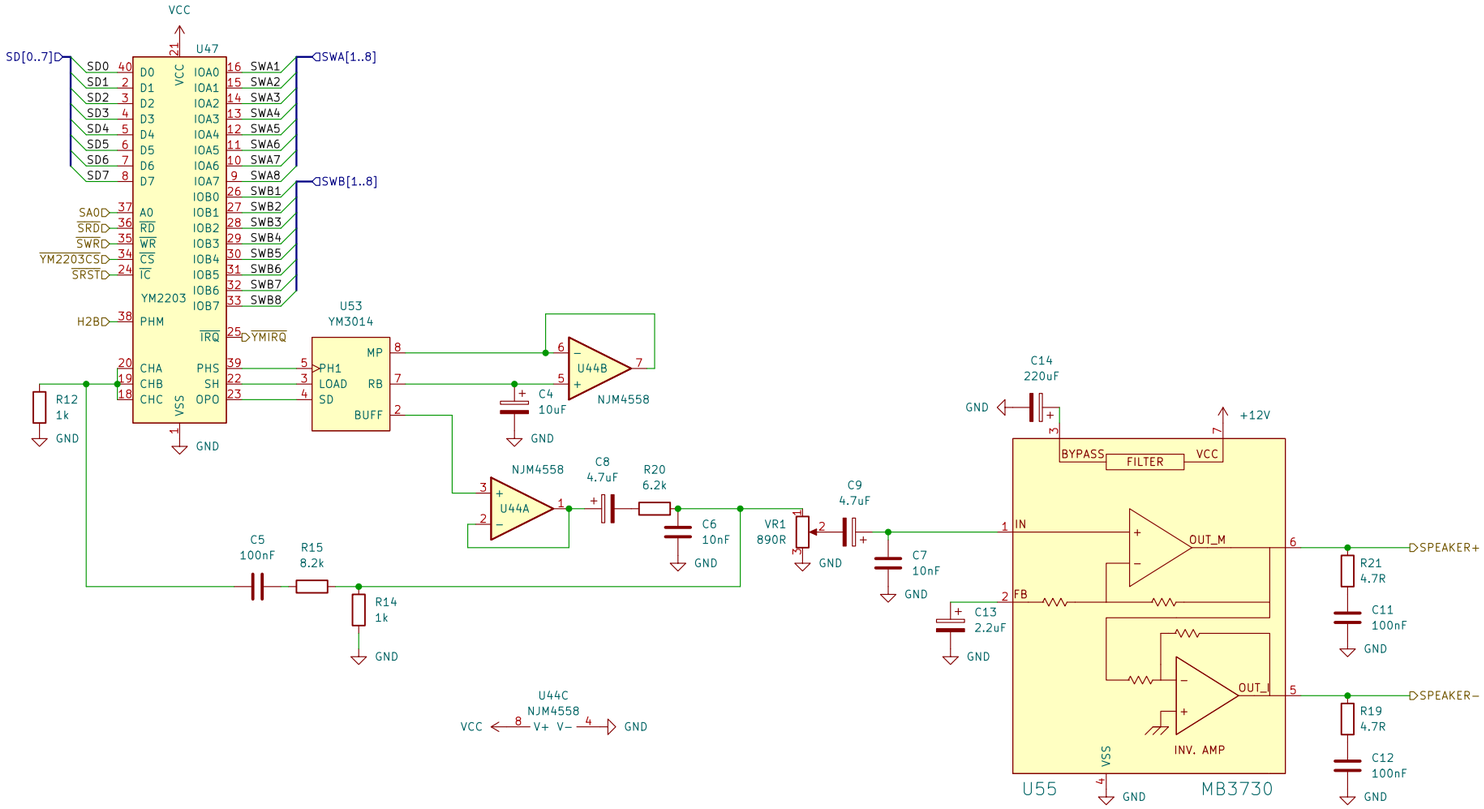

Ulf Skutnabba, twitter: @skutis77		
Sheet: /Sound/ File: sound.kicad_sch		
Title: Insector X – P0–056A		
Size: A3	Date: 2022–11–14	**Rev:**
KiCad E.D.A. kicad 6.0.2+dfsg–1		Id: 5/6

Clock

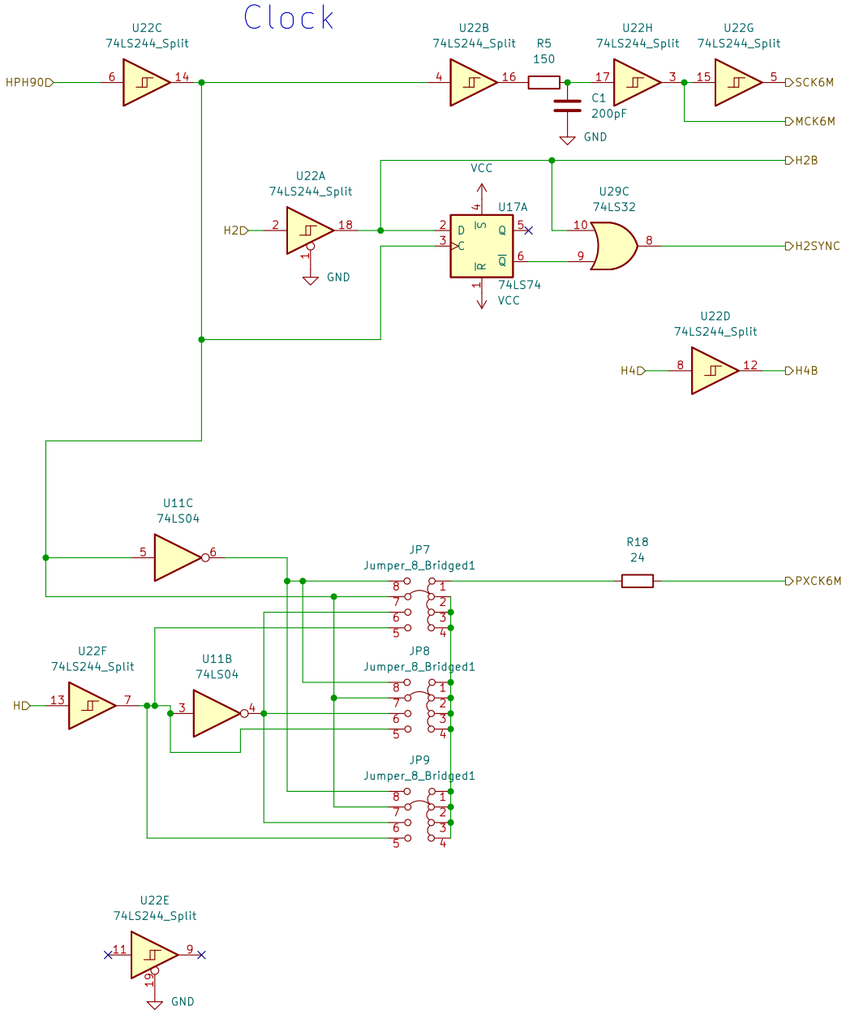

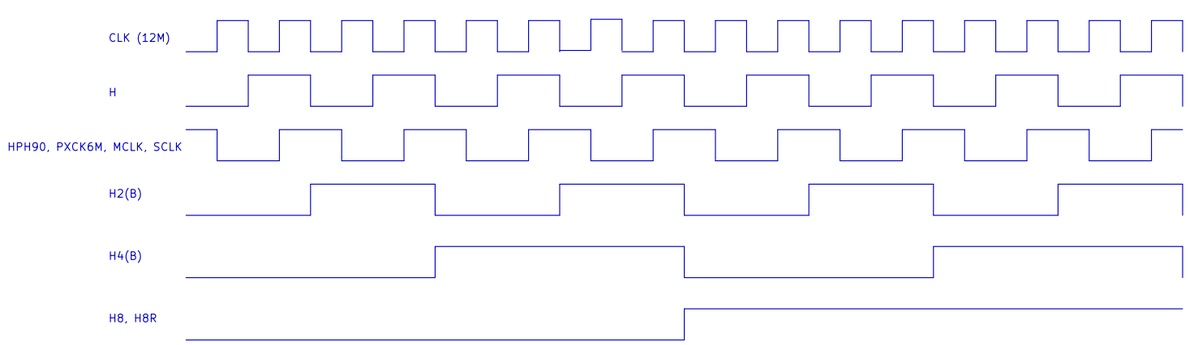

Watchdog

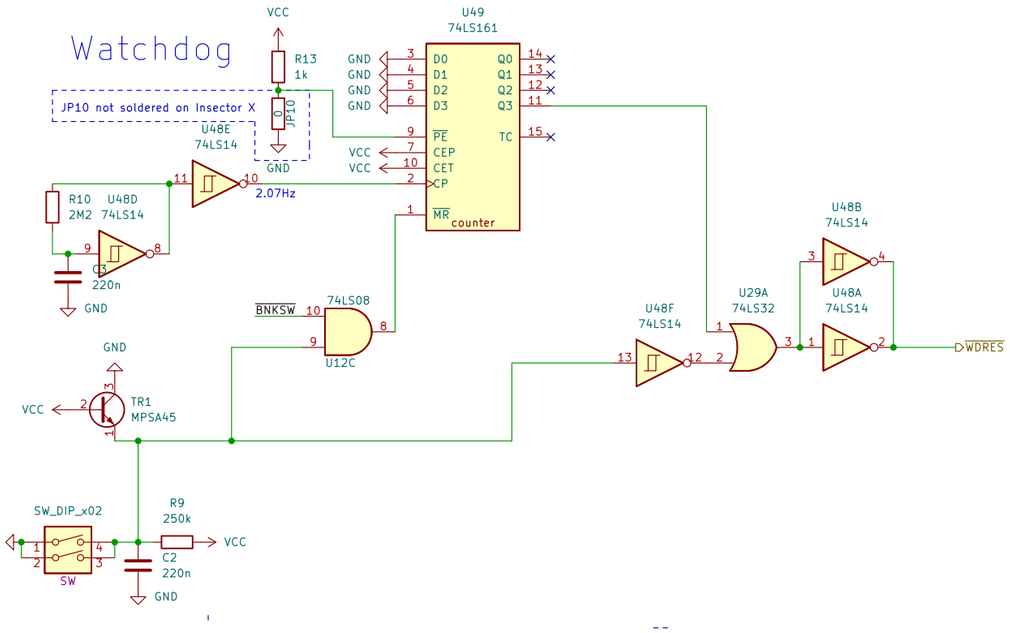

Ulf Skutnabba, twitter: @skutis77

Sheet: /Misc/
File: misc.kicad_sch

Title: Insector X – P0–056A

Size: A3	Date: 2022–11–14	**Rev:**
KiCad E.D.A. kicad 6.0.2+dfsg–1		Id: 6/6