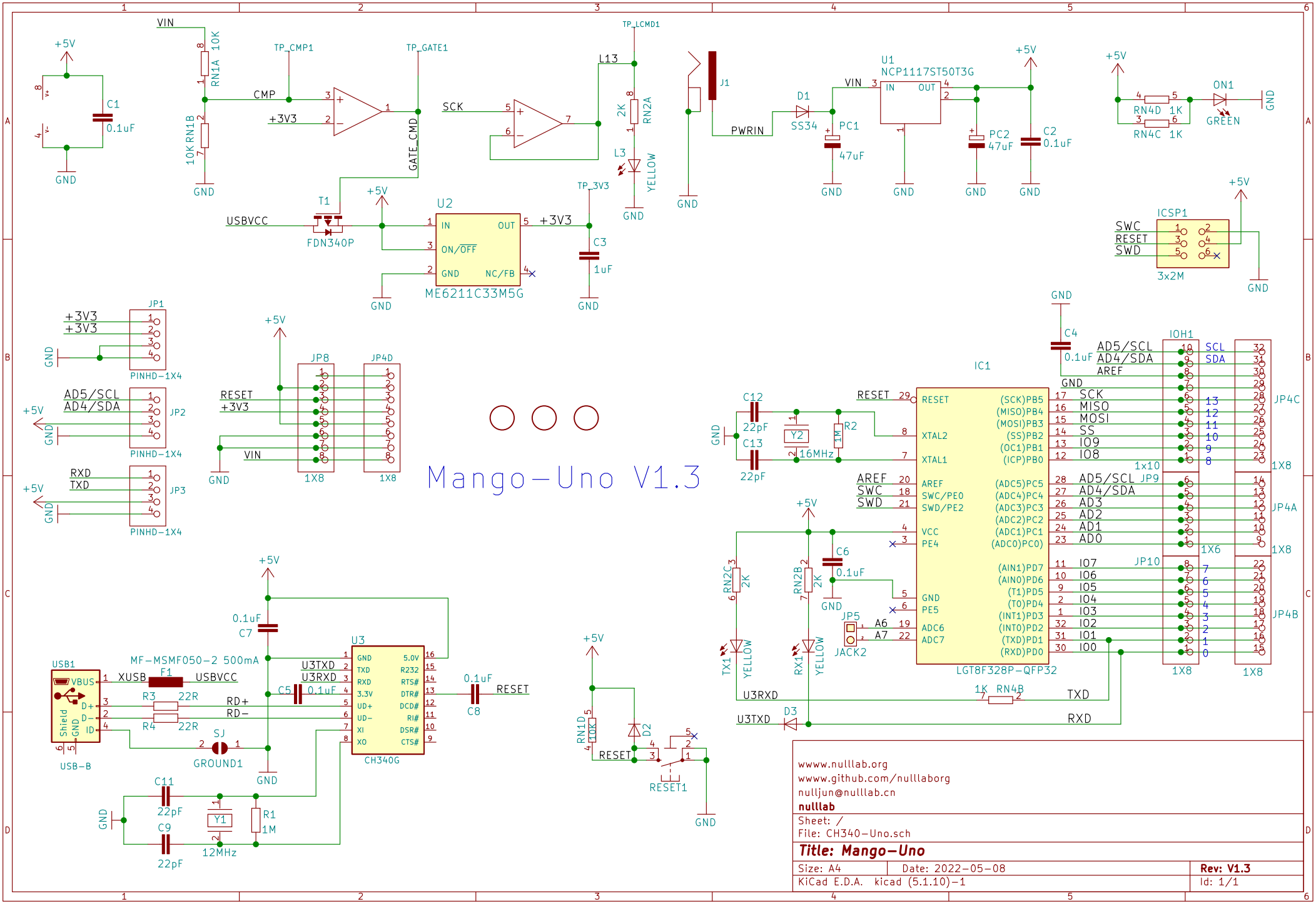
Mango-Uno V1.3
U1
NCP1117ST50T3G
U2
ME6211C33M5G
IC1
LGT8F328P-QFP32
U3
CH340G
USB1
MF-MSMF050-2 500mA
ICSP1
3x2M
JP1
JP2
JP3
JP8
JP4D
JP4C
JP4A
JP4B
JP9
JP10
IOH1
JP5
JACK2
J1
PWRIN
VIN
+5V
GND
+3V3
USBVCC
XUSB
USBVCC
RESET
U3TXD
U3RXD
RD+
RD-
AD5/SCL
AD4/SDA
SCK
MISO
MOSI
SS
IO9
IO8
AD3
AD2
AD1
AD0
IO7
IO6
IO5
IO4
IO3
IO2
IO1
IO0
TXD
RXD
SWC
SWD
A6
A7
www.nulllab.org
www.github.com/nulllaborg
nulljun@nulllab.cn
nulllab
Sheet: /
File: CH340-Uno.sch
Title: Mango-Uno
Size: A4
Date: 2022-05-08
Rev: V1.3
KiCad E.D.A. kicad (5.1.10)-1
Id: 1/1