Experimental Investigation of Dogbone Moment Connections

MICHAEL D. ENGELHARDT, TED WINNEBERGER, ANDREW J. ZEKANY, and TIMOTHY J. POTYRAJ

ABSTRACT

A test program was conducted on seismic-resistant steel moment connections constructed using a Reduced Beam Section, also known as a "dogbone." In the dogbone connection, portions of the beam flange near the beam-to-column connection are trimmed in order to enhance ductility under severe cyclic loads. This test program was conducted in order to evaluate the dogbone connection for use in a 25 story steel office building in Salt Lake City.

A total of five large scale specimens were tested in this program, with beam sizes ranging from W30×148 up to W36×194. The specimens combined the dogbone cutout in the beam flanges with an all welded beam-to-column connection constructed using improved welding practices. The test program showed excellent performance for specimens constructed with a circular radius cut dogbone. Cost comparisons indicated that this connection also provided good economy compared to other alternatives considered for this building construction project. Overall, the dogbone appears to be one of the more promising moment connection details for use in seismic-resistant steel moment frames.

This paper summarizes the results of the experimental program, and provides suggestions for the design of dogbone moment connections.

INTRODUCTION

This paper summarizes the results of five large scale tests conducted on seismic-resistant steel moment connections constructed using a Reduced Beam Section (RBS), also commonly referred to as a "dogbone." These tests were conducted to evaluate the moment connection design for a 25 story steel office building recently constructed in Salt Lake City, Utah. More specifically, the tests were intended to assess the ductility of the connection under severe cyclic loads. The test program was developed as a joint effort between W&W Steel Company of Oklahoma City, HKS, Inc. of Dallas, and The University of Texas at Austin.

A description of this 25 story steel building can be found in Reference 1. The article in Reference 1 also provides further background to the dogbone moment connection, briefly describes the connection test program, and discusses design and fabrication considerations for the connection. Much of the information presented in Reference 1 will not be repeated here. Rather, this paper will focus on the experimental program. Details for each of the five test specimens will be presented, along with their experimentally measured response. Design implications of this data will be discussed.

Development of Connection Concept

In the development of a connection concept for the 25 story office building, the goal was to achieve highly ductile performance together with good economy. Since the 1994 Northridge Earthquake, a wide variety of different moment connections have been developed in an attempt to address the problems observed in steel moment frames after the earthquake. Most of these connections incorporate significant improvements both in welding and in the connection design, and have generally shown a substantial increase in ductility in laboratory tests as compared to the "Pre-Northridge" connection. References 2 and 3 provide information on many of the moment connections which have been tested since the Northridge Earthquake. While many of the new moment connection designs have shown good performance in a limited number of laboratory tests, important concerns remain with respect to both the reliability and the cost of these connections.

A particularly popular moment connection used since the Northridge Earthquake is the cover plated connection. This was one of the first improved connections tested after the earthquake.[4] In laboratory tests on large scale specimens, cover plated connections have often shown large increases in ductility as compared to the "Pre-Northridge" connection, although some cover plated connections have also experi-

Michael D. Engelhardt is associate professor, civil and environmental engineering, The University of Texas at Austin, Austin, TX.

Ted Winneberger is senior vice president–engineering with W&W Steel Company, Oklahoma City, OK.

Andrew J. Zekany is vice president–structural engineering with HKS Inc., Dallas, TX.

Timothy J. Potyraj is a research assistant, The University of Texas at Austin, Austin, TX.

enced failures in the laboratory.[5] In the design of the 25 story office building in Salt Lake City, cover plated connections were considered as a first alternative, with the connection design based on guidelines presented in Reference 2.

While generally showing very good performance in the laboratory, there are also concerns with cover plated connections.[5] The welds on cover plated connections can be difficult to make and difficult to inspect. Similar difficulties in welding and inspection can also occur in connections reinforced with ribs or haunches. Further, when thick cover plates are combined with thick beam flanges, the resulting groove welds are very large and can potentially cause difficulties with weld shrinkage and restraint. Concerns have also been raised with respect to the presence of a stress concentration at the interface of the beam flange and the cover plate.[5]

Concerns both of cost and reliability lead to the search for an alternative to the cover plated connection for the 25 story office building in Salt Lake City. A number of alternatives were considered, including other types of welded connections as well as bolted connections. Based on this evaluation, the dogbone connection emerged as a preferred choice, with the potential to combine good performance and economy with improved reliability.

In dogbone moment connections, portions of the beam flanges are trimmed near the beam ends. The dogbone is intended to force yielding to occur away from the face of the column, and to reduce stress levels at the beam flange groove welds. The effect of the dogbone is similar to that of cover plates. With cover plates, the connection is made stronger than the beam by strengthening the connection. In the case of the dogbone, the connection is effectively made stronger than the beam by weakening the beam. While producing a benefit similar to that of cover plates, the dogbone connection can be constructed with considerably simpler details, leading to a potentially more reliable and more economical connection.

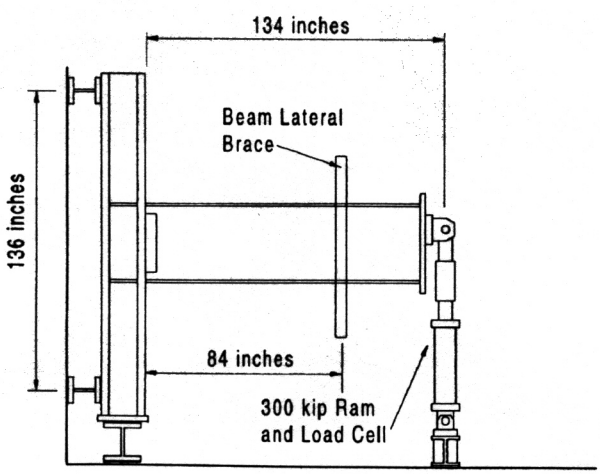

Fig. 1. Test setup.

Table 1.
Beam and Column Sections:
Measured Tensile Coupon Data

Spec.	Beam	Column	Yield Stress (ksi) Flange	Yield Stress (ksi) Web	Tensile Strength (ksi) Flange	Tensile Strength (ksi) Web
DB1	W36×160		54.7	53.5	75.6	79.2
		W14×426	NA	NA	NA	NA
DB2	W36×150		41.4	47.1	58.7	61.8
		W14×426	49.9	50.0	74.5	75.0
DB3	W36×170		58.0	58.5	73.0	76.7
		W14×426	NA	NA	NA	NA
DB4	W36×194		38.5	43.6	58.6	59.8
		W14×426	49.9	50.0	74.5	75.0
DB5	W30×148		46.6	48.5	64.5	65.4
		W14×257	48.7	49.4	69.0	66.2

Notes: All yield stress values measured at a testing machine crosshead rate of 0.02 inches/minute. Tensile coupon data not available for columns from DB1 and DB3.

At the time when various connection alternatives were being evaluated for the 25 story office building, considerable research work had already been completed elsewhere on the dogbone concept. Much of this work showed very promising performance. An early application of the dogbone concept appears in the literature in 1969.[6] More recently, research by Plumier of Belgium,[7] Chen and Yeh in Taiwan,[8] Iwankiw and Carter at AISC,[9] and Ove Arup and Partners in Los Angeles[10] has shown the potential of the dogbone concept. Based on the successes of these previous studies, the dogbone concept was adopted as a likely candidate for this office building in Salt Lake City. However, it was believed that insufficient large scale test data was available to permit use of this connection with confidence. Consequently, a test program was initiated to further develop and verify the dogbone connection for use on this construction project.

Experimental Program

A total of five large scale tests were conducted on single cantilever type test specimens subject to slowly applied cyclic loads. Figure 1 shows the test setup, and Figures 2 to 6 show the details for each of the test specimens. The specimens were designated as "DB1" through "DB5."

The member sizes and the results of tensile coupon tests are listed in Table 1. All of the columns were of A572 Gr. 50 steel. Mill certificates were not available for most of the beam sections used in the tests, so the specified grades of steel were

not known. Note that the actual measured beam flange yield stress values varied from a low of 38.5 ksi for the W36×194 of Specimen DB4, to a high of 58 ksi for the W36×170 of DB3. Consequently, a wide variety of beam yield stress values were tested in this program. The W14×426 column size used in Specimens DB1 through DB4 was selected to force most of the inelastic action into the beams. The member sizes used in DB5 were chosen to promote yielding of the column panel zone, in order to evaluate the effect of limited panel zone yielding on connection performance.

The concept adopted for these connections was to combine the dogbone cutout in the beam with a high quality all-welded beam-to-column connection. Preliminary calculations indicated that even with the dogbone cutout in the beam flanges, rather high levels of moment, perhaps in excess of M_p, could still develop in the beam at the face of the column. Consequently, a great deal of care was taken in designing and detailing the beam-to-column connection to avoid failures at the face of the column.

Each of the test specimens incorporated the following features:

- Use of dogbone cutout in beam flanges. In Specimen DB1, a dogbone of constant width was provided, as shown in Figure 2. In the remaining specimens, a circular cutout was provided, as illustrated in Figures 3 to 6. In each case, approximately 40 percent of the beam flange width was removed. A discussion of the criteria used to establish the dimensions of the cutouts is provided later. In each case, the cuts were made carefully, and then ground smooth in a direction parallel to the beam flange to minimize notches.
- Use of a fully welded web connection. The connection between the beam web and the column flange was made with a complete joint penetration groove weld, rather than with a more conventional bolted shear tab. While a bolted web connection is more economical, it was believed that a welded web would improve the reliability of the connection. Well before the Northridge Earthquake, a number of studies indicated that better performance is possible with a welded web connection as compared to a bolted web connection.[13-15] It is believed that the welded web provides for better force transfer in the web connection, and thereby reduces stress levels at the beam flanges and beam flange groove welds.
- Use of high toughness weld metal. Research conducted since the Northridge Earthquake has clearly demonstrated the importance of weld metal toughness in the groove welds of seismic resistant moment connections.[11,12] In the test specimens, all groove welds between the beam and column were made with the self shielded flux cored arc welding process using an E71T-8 electrode. This electrode provides a minimum specified CVN value of 20 ft-lbs. at –20 deg. F.
- Removal of weld tabs at both the top and bottom beam flange groove welds. The weld tabs were removed to eliminate any potential notches introduced by the tabs or by weld discontinuities in the groove weld runout regions.
- Removal of bottom flange backing bars. The bottom flange backing bars were removed to eliminate any potential notch effects introduced by the backing bar and to permit more reliable inspection of the weld. After the backing bar was removed and the weld root was inspected, a small reinforcing fillet weld was placed at the root of the groove weld.
- Use of a seal weld at the top flange backing bar. The top flange backing bar was left in place. There were several

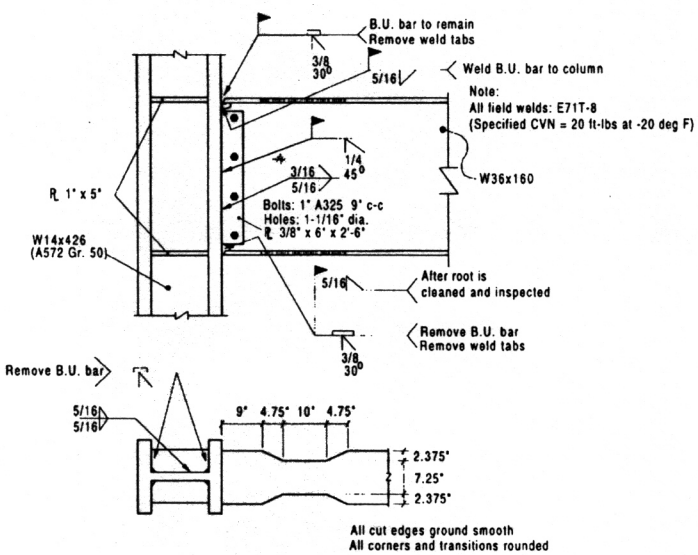

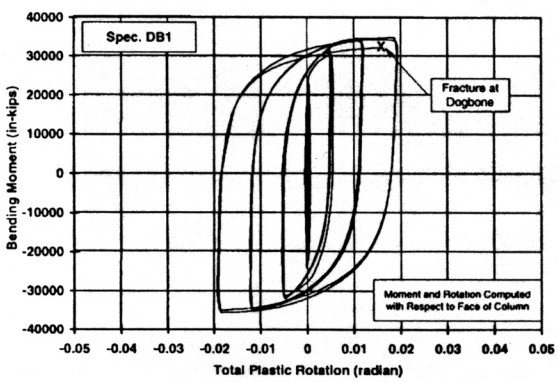

Fig. 2. Specimen DB1.

reasons for this. First, root defects are less likely at the top flange since neither the groove weld nor the ultrasonic testing of the groove weld is interrupted by the beam web, as they are at the bottom flange. Further, removal of the top flange backing bar is more difficult and costly than at the bottom flange, since the arc-gouging must be done through the weld access hole. Consequently, for this project the top backing bar was left in place. However, a continuous fillet weld was provided between the backing bar and the column flange. From a theoretical perspective, this fillet weld reduces the potential notch effect of a left in place backing bar.[19]

- Use of continuity plates with a thickness approximately equal to the beam flange thickness. According to continuity plate requirements specified in the UBC prior to the Northridge Earthquake, no continuity plates would have been required for any of the test specimens. However, continuity plates were provided in all cases to help minimize stress concentrations across the width of the beam flange groove welds. For the test specimens, beam flange thickness varied from 0.94 to 1.26 inches. One inch thick continuity plates were used for all specimens.

Table 2.
Specimen Loading History

Beam Tip Displacement (inches)	Number of Loading Cycles
±0.50	3
±0.75	3
±1.0	3
±2.0	3
±3.0	3
±4.0	2
±5.0	2
±6.0	2
etc.	

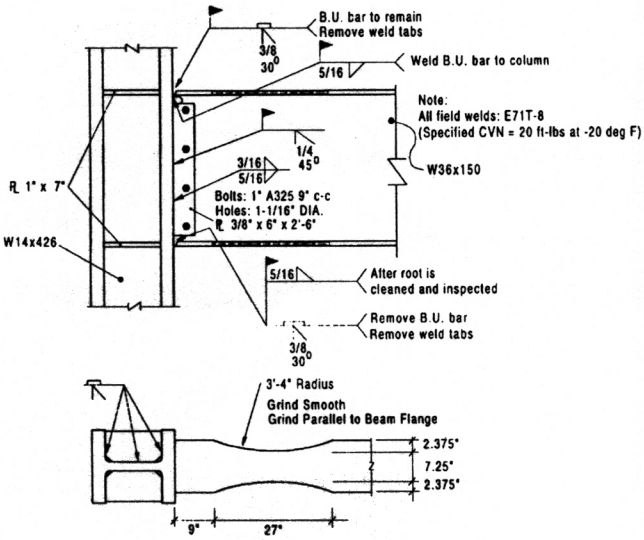

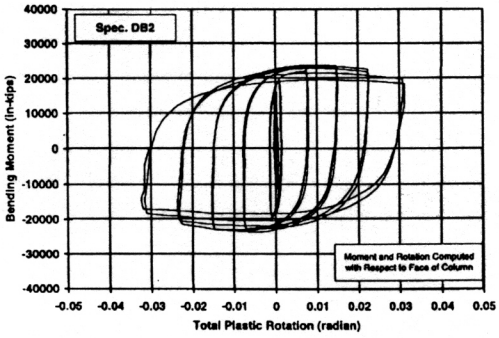

Fig. 3. Specimen DB2.

While the dogbone cutout is certainly the most distinguishing feature of these test specimens, it is believed that many of the other features of the connection noted above play an important role in developing reliable connection performance.

Figures 7 to 9 illustrate typical details of the test specimens. Figure 7 is an overall view of Specimen DB4 prior to testing. The detail at the bottom flange groove weld is shown in Figure 8. Note that the backing bar and weld tabs have been removed, and a reinforcing fillet weld has been placed at the base of the groove weld. Figure 9 shows details at the top flange groove weld. The weld tabs have been removed. The backing bar, which was left in place, is welded to the face of the column.

Test Results

Each of the specimens was subject to an identical displacement controlled loading history based on the protocol suggested in ATC-24.[16] The loading history used in these tests is shown in Table 2. The tests were continued until failure of the specimen, or until limitations of the test setup were reached.

The hysteretic response of each specimen is shown in Figures 2 to 6. These plots show beam moment versus total plastic rotation. The beam moment is measured at the face of the column, and was computed by taking the beam tip force multiplied by the distance to the face of the column (134 inches). The total plastic rotation was computed by taking the plastic portion of the tip deflection and dividing by the distance to the face of the column. Thus, both the moment and plastic rotation shown in Figures 2 to 6 are computed with respect to the face of the column. Note that the total plastic

Table 3. Summary of Test Results			
Spec.	**Dogbone Type**	**Total Plastic Rotation**	**Comments**
DB1	constant cut	0.020 rad	specimen failed by fracture at dogbone cut in beam
DB2	radius cut	0.030 rad	no connection failure–beam capacity deteriorated gradually due to local and lateral buckling
DB3	radius cut	0.038 rad	no connection failure–beam capacity deteriorated gradually due to local and lateral buckling; small cracks were observed in groove welds and in beam flanges at weld access holes; cracks remained small and had no effect on specimen performance
DB4	radius cut	0.037 rad	no connection failure–beam capacity deteriorated gradually due to local and lateral buckling
DB5	radius cut	0.040 rad	no connection failure–only slight local and lateral buckling observed in beam; substantial yielding observed in column panel zone; test terminated due to reaching displacement capacity of test setup

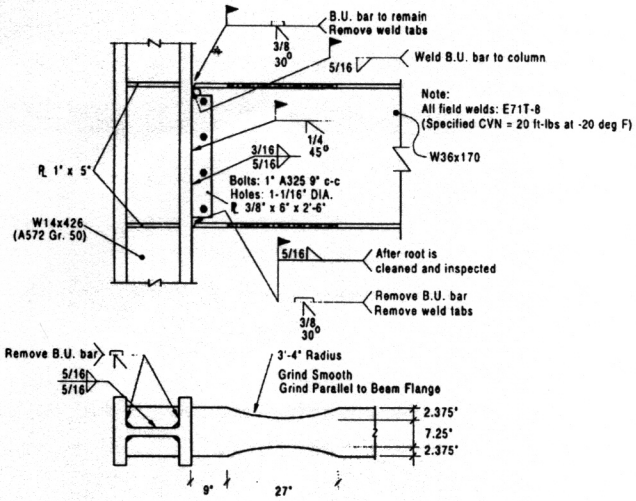

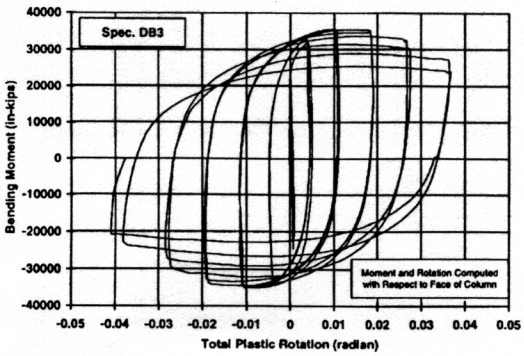

Fig. 4. Specimen DB3.

rotation includes all sources of inelastic action in the beam and column. Measurements and observations made during the tests indicated that virtually all of the plastic rotation in DB1 to DB4 was developed within the beam. Essentially no yielding occurred in the columns of these specimens. In Specimen DB5, significant yielding was observed in the column panel zone. Analysis of test data for DB5 indicates that about 25 percent of the total plastic rotation was developed by panel zone yielding, with the remainder developed by yielding in the beam.

Table 3 lists the total plastic rotation achieved by each specimen at the end of the test. The target level of plastic rotation for acceptable performance was taken as ±0.03 radian, as suggested in the Interim Guidelines developed by the SAC Joint Venture.[2]

Specimen DB1, which was provided with a constant width dogbone cutout, showed excellent performance in its early inelastic cycles. However, a fracture developed in the dogbone region of the beam at the end of the flat portion of the cutout nearest the face of the column. The stress concentration caused by the sudden change in cross-section at this location likely contributed to the fracture. Nonetheless, this specimen still developed 0.02 radian of plastic rotation and showed no sign of distress at the face of the column. Figure 10 shows Specimen DB1 at the end of testing.

Based on the first specimen, it appeared better performance might be possible by changing the shape of the dogbone cutout to minimize stress concentrations. Ted Winneberger of W&W Steel Company proposed the use of a circular radius cut dogbone. The same concept had been proposed independently by others, including Plumier[7] and Popov.[17]

Each of the remaining specimens, DB2 through DB5, were

Table 4.
Data on Beam Moments

Spec.	Beam	M_p (in-kips)	M_{p-RBS} (in-kips)	M_{max} (in-kips)	$M_{max-RBS}$ (in-kips)	M_{max} / M_p	$M_{max-RBS} / M_{p-RBS}$
DB1	W36×160	33907	24633	35510	31866	1.05	1.29
DB2	W36×150	25079	18620	23852	19847	0.95	1.07
DB3	W36×170	38842	28229	35644	29659	0.92	1.05
DB4	W36×194	30657	22764	34706	28879	1.13	1.27
DB5	W30×148	23547	17023	23852	20737	1.01	1.22

M_p = plastic moment of beam based on tensile coupon data
M_{p-RBS} = plastic moment at minimum section of reduced beam section, based on tensile coupon data
M_{max} = maximum moment developed in beam at face of column
$M_{max-RBS}$ = maximum moment developed at minimum section of reduced beam section

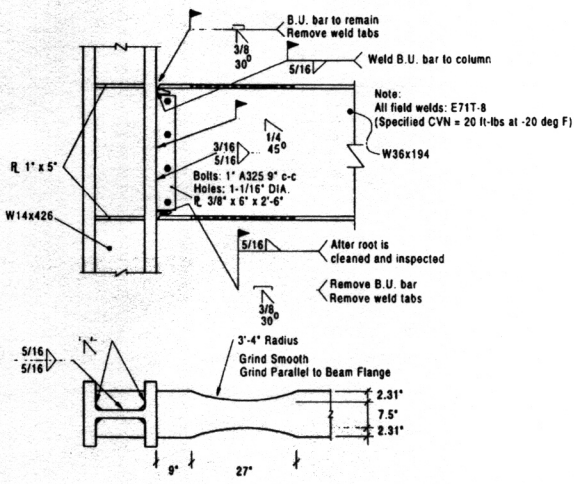

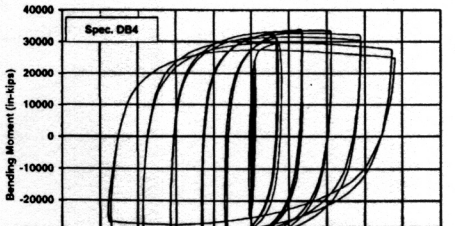

Fig. 5. Specimen DB4.

provided with radius cut dogbones, and each showed excellent performance. The hysteretic response for each specimen is shown in Figures 3 to 6. No failures occurred in these specimens. Testing was stopped in each case due to limitations in the test setup or to avoid damage to the test setup. Each of the four radius cut dogbone specimens developed at least 0.03 radian of plastic rotation prior to termination of the test.

The performance of each of the four radius cut dogbone specimens (DB2 to DB5) was similar. Significant yielding was typically first observed during the loading cycles at ±2-inch beam tip displacement, and then increased and spread during subsequent loading cycles. The most intense yielding was observed in the beam flanges, within the reduced section of the beam. The unreduced portion of the beam flanges near the face of the column also showed yielding, although significantly less severe than within the reduced section. The beam web also yielded over its full depth. In the case of DB5, significant yielding was also observed in the web of the column in the joint panel zone.

In the case of Specimen DB3, small cracks were observed in the beam flange groove welds and in the beam flanges at the end of the weld access holes, i.e., where the access hole meets the beam flange. These cracks were observed in the loading cycles at ±4-inch beam tip displacement. These cracks did not grow throughout the remainder of the test, and therefore had no adverse effect on the overall connection performance. Specimen DB3 had the highest beam yield stress (58 ksi yield stress in the beam flanges) and therefore likely placed the highest demands on the beam flange groove welds of the five specimens tested in this program. It is believed that the high toughness weld metal was a key factor that prevented the growth of the weld cracks. The small cracks

at the toe of the weld access holes may have been caused by the access hole geometry. Even though these cracks remained small, the access holes for the remaining specimens were enlarged and provided with a smoother transition to the beam flange in order to minimize stress concentrations introduced by the access hole.

For each of the specimens, a gradual deterioration of strength occurred due to local flange and web buckling combined with lateral torsional buckling of the beam. This gradual reduction in strength typically occurred after about 0.015 to 0.02 radian of plastic rotation. For Specimens DB2, DB3, and DB4, testing was ultimately stopped to prevent damage to the test setup from the twisting beam. In Specimen DB5, significantly less beam local buckling was observed, and testing was continued until the displacement limit of the test setup was reached. Local and lateral buckling of the beam occurs not only in dogbone connections, but has been observed in most connections that develop plastic rotation by yielding of the beam. The observed local and lateral buckling of these dogbone specimens was no more severe, and perhaps somewhat less severe than cover plated and other reinforced connections previously tested by the writers at The University of Texas. A question which arises in the design of dogbone moment connections is whether an additional lateral support is needed at the dogbone in order to control lateral torsional buckling. In the judgment of the writers, based on observations made during these tests, no additional lateral support appears necessary at the dogbone.

Figures 11 and 12 show Specimen DB4 at two stages of loading. Figure 11 shows the specimen after being loaded to a plastic rotation of 0.022 radian. Observe the yielding concentrated within the reduced section. Figure 12 shows Specimen DB4 at the end of testing, which corresponded to a plastic rotation of 0.037 radian.

Table 4 presents data on the magnitude of bending moments developed in the test specimen beams. The estimated plastic moment of each beam (based on measured tensile coupon data) is listed both for the full cross-section, and for the reduced section at mid-length of the dogbone cutout. These are compared to the maximum moment developed in each test beam at the face of the column, and at mid-length of the dogbone. The maximum moments developed within the reduced section varied from 1.05 to 1.29 times the plastic moment of the reduced section. These values suggest substantial strain hardening occurred within the dogbone. At the face of the column, the maximum beam moments ranged from 0.92 to 1.13 times the plastic moment of the full beam cross-section. The beam-to-column connection details used for the test specimens were capable of resisting these moments without failure.

In summary, each of the four radius cut dogbone specimens

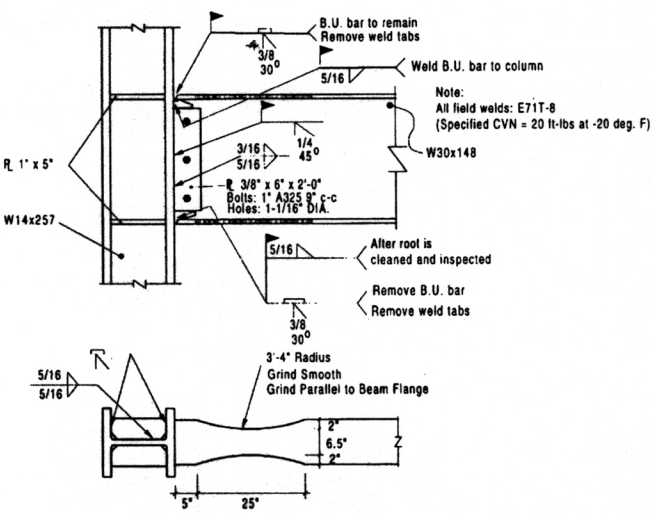

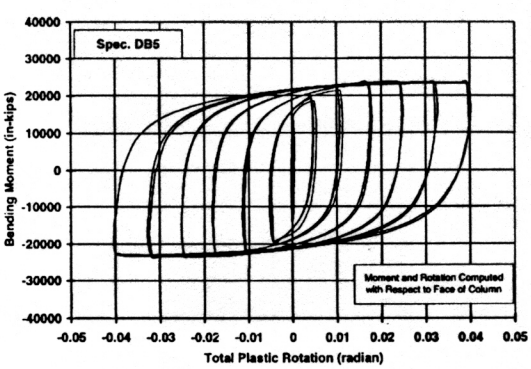

Fig. 6. Specimen DB5.

Fig. 7. Specimen DB4– Overall view prior to testing.

showed excellent cyclic loading performance, developing at least 0.03 radian of plastic rotation in each case. W&W Steel Company also conducted a comparative cost study for a variety of connection types. This study showed the radius cut dogbone connection was the least costly among nine different connection types considered, including cover plated connections.[1] Based on the excellent laboratory performance of this connection combined with the favorable cost analysis, the radius cut dogbone was adopted for use in the 25 story steel office building in Salt Lake City.

Design Implications

The limited number of tests conducted in this program is insufficient to develop general design guidelines for dogbone moment connections. However, the results can be used to develop preliminary guidelines that may be useful until further analytical and experimental data are available. This section provides some suggestions for design of dogbone moment connections based on the results of this test program and based on the judgment of the writers. Further suggestions on the design of dogbone moment connections can be found in References 1, 3, and 20.

The key features of the connections tested in this program include not only the radius cut dogbone, but also the other welding and design features of the beam-to-column connection listed earlier, i.e., the use of high toughness weld metal, the use of a welded web connection, the use of continuity plates, etc. Further research may show some of these items are not needed. For example, continuity plates may not be needed in all cases. However, until further research is available, the writers suggest using welding and design details similar to the tested connections. Other details should be verified experimentally before use.

An important design decision in the dogbone connection is the geometry of the cutout. Key dimensions for the radius cut dogbone are shown in Figure 13. These include the distance from the face of the column to the start of the cut (dimension *a*), the length of the cut (dimension *b*), and the depth of the cut (dimension *c*). Based on the judgment of the writers, the

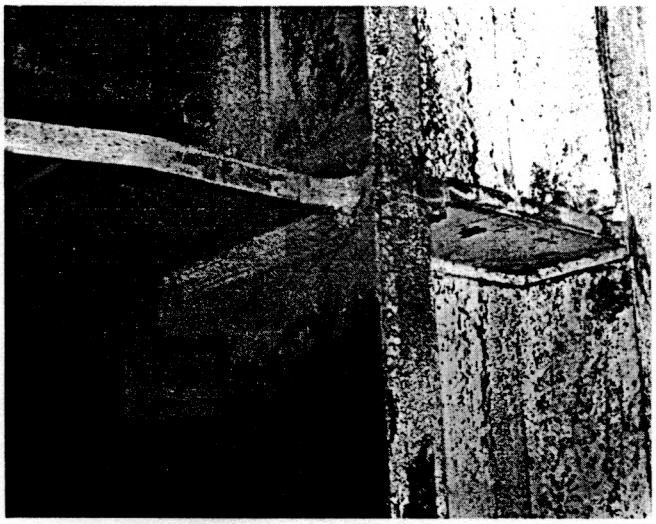

Fig. 8. Specimen DB4– Bottom flange groove weld.

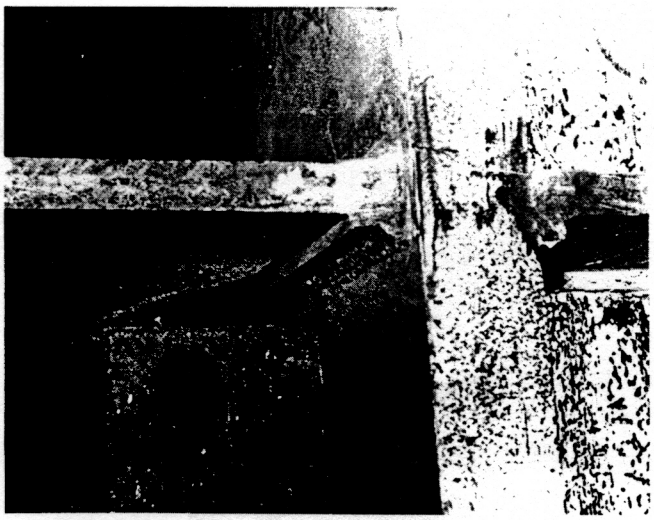

Fig. 9. Specimen DB4– Top flange groove weld.

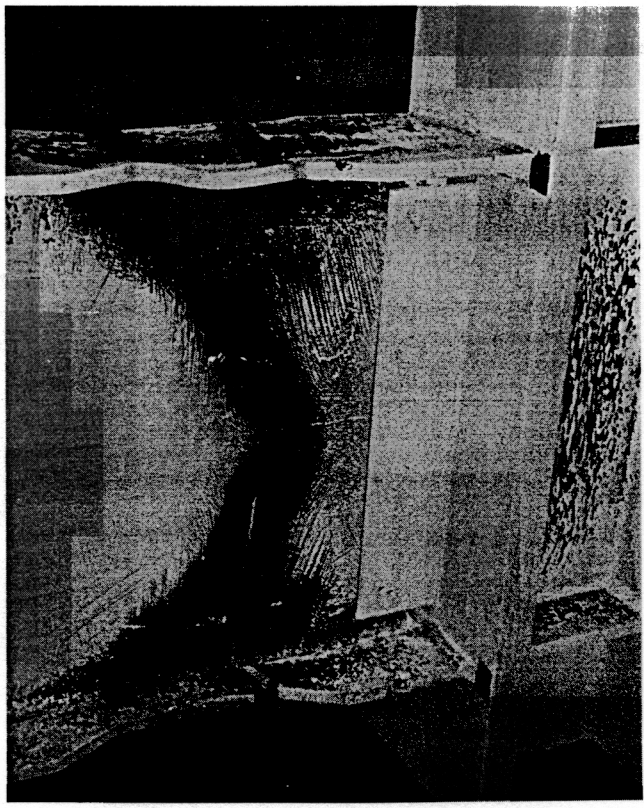

Fig. 10. Specimen DB1 after testing.

following suggestions are provided for selecting dimensions a and b:

$$a \approx (0.5 \text{ to } 0.75)b_f \tag{1}$$

$$b \approx (0.65 \text{ to } 0.85)d \tag{2}$$

where b_f and d are the flange width and depth of the beam. In general, the dimensions a and b should be kept small in order to minimize the growth of moment from the minimum section of the dogbone back to the face of the column. The larger these dimensions become, i.e., the further the dogbone moves away from the column, the less effective the dogbone will be in limiting the maximum beam moment at the face of the column. On the other hand, making these dimensions too short may result in undesirably high strain concentrations either at the face of the column or within the dogbone. Thus, the dimensions suggested above attempt to balance these differing requirements.

Once the dimensions a and b have been selected, the depth of the cut c must be determined. Referring to Figure 14, a preliminary method for choosing c was established based on the following assumptions:

- The maximum moment developed at mid-length of the dogbone cutout (M_{RBS} in Figure 14) is equal to 1.15 times the plastic moment of the reduced section. The 1.15 value accounts for strain hardening.
- From mid-length of the dogbone cutout, the moment can be projected to the face of the column based on a linear moment diagram, with a point of inflection assumed at a distance L from the face of the column.
- The maximum beam moment at the face of the column (M_F in Figure 14) is limited to αM_p, with α chosen in the range of about 0.85 to 1.0.
- The maximum practical cutout is about 50 percent of the beam flange width (corresponding to $c = 0.25\ b_f$).

Based on these assumptions, the following equation can be derived for the value of c:

$$c \geq \frac{Z}{2t_f(d-t_f)}\left[1-\frac{\alpha(L-a-0.5b)}{1.15L}\right] \leq 0.25b_f \tag{3}$$

where

Z = plastic section modulus of beam
t_f = beam flange thickness
b_f = beam flange width
d = beam depth
L = distance from face of column to point of inflection in beam moment diagram
a, b, c = dimensions shown in Figure 13
α = target bending moment at face of column divided by M_p of beam (i.e., target bending moment at face of column = αM_p).

Equation 3 neglects the influence of gravity loads on the moment diagram, assuming that gravity load moments are small compared to moments generated by lateral loads. If substantial gravity loads are present, the moment at the face of the column can be computed using methods presented in

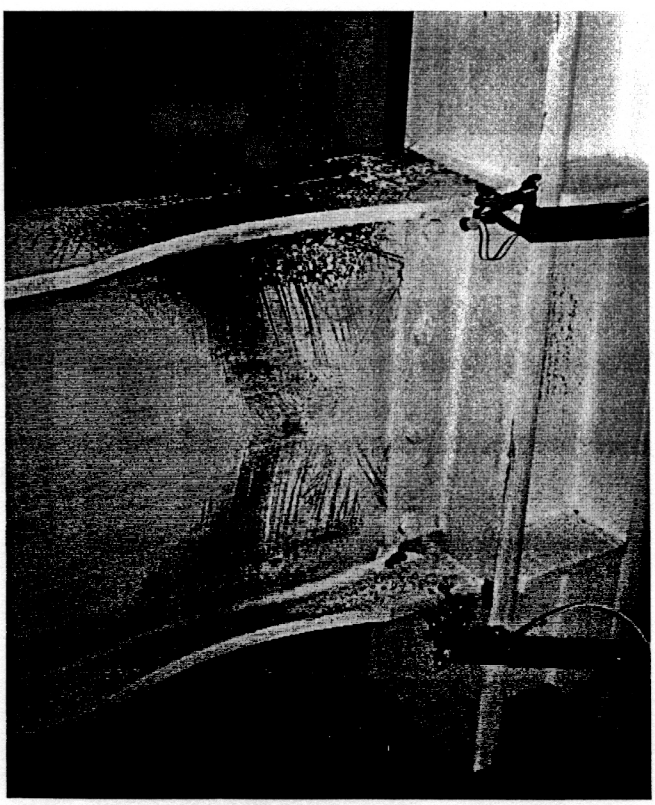

Fig. 11. Specimen DB4 at θ_p = 0.022 radian.

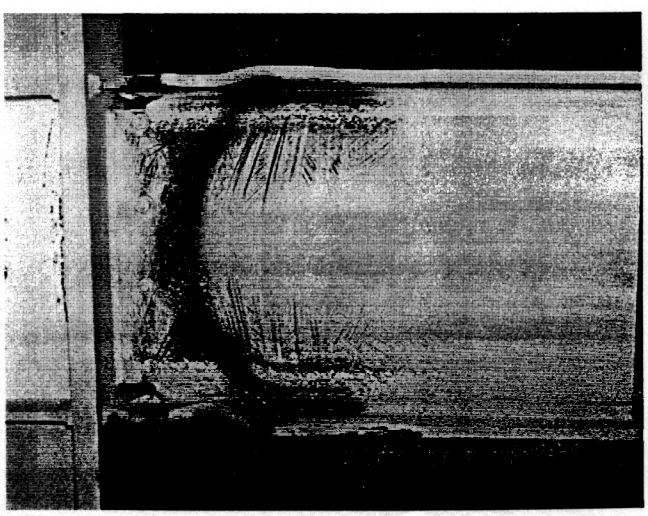

Fig. 12. Specimen DB4 at end of test (θ_p = 0.037 radian).

References 2 and 3. In this case, it is still recommended that the moment at the face of the column be limited to approximately 85 to 100 percent of M_p of the beam.

In general, it is desirable to limit the maximum moment at the face of the column to the smallest possible value in order to limit the possibility of fracture in the beam flange groove weld or surrounding base metal regions. Thus, the value of α in the above equation should be chosen to be as small as practically possible. In the case of the test specimens, a target value of α of about 1.0 leads to the approximate values of c actually used in the specimens. This implies that the maximum beam moments expected at the face of the column are on the order of M_p of the beam. As noted in Table 4, the actual maximum moments at the face of the column varied from 0.92 to 1.13 times M_p, reflecting a considerable variability in the actual strain hardening developed in the reduced section of the beams. Note that the test setup provides $L = 134$ inches, corresponding to a moment frame with a clear span of about 22 feet (assuming a point of inflection at midspan). The large moment gradient associated with such a short span did not permit any larger reduction of the maximum beam moment at the face of the column, due to the rapid growth of moment from the dogbone back to the face of the column. For longer spans more typical of moment frame construction, it will be possible to limit the maximum moment at the face of the column to smaller values, perhaps on the order of 85 to 90 percent of M_p. The writers recommend starting with a target value of α of about 0.9 in the above equation. As a point of comparison, tests on all-welded moment connections without dogbone cutouts often show maximum moments at the face of the column of about 125 percent of M_p or greater.[13-15] Consequently, the addition of the dogbone cutouts in the beam results in a substantial reduction in moment at the face of the column.

Due to the rather significant uncertainties involved in the many factors which may affect the performance of this connection, a great deal of precision in establishing the dimensions of the dogbone cutout is not justified. A wide range of choices in the values of a, b, and c will likely permit satisfactory connection performance. Thus, these dimensions can likely be simplified and standardized over a large number of beams on a project in order to simplify fabrication of the dogbones.

Once the dimensions of the dogbone cutouts have been established, the moment frame beams should be checked for compliance with all code mandated strength and stiffness requirements. The maximum moment developed at the minimum section of the dogbone under all code required combinations of gravity, wind, and earthquake loads should be checked against the capacity of the reduced section. In some cases, a small increase in beam size or an adjustment of the dogbone dimensions may be needed. In many practical cases, however, no adjustment in beam size may be needed to satisfy strength requirements, since moment frame beam sizes are typically controlled by code mandated drift limits.

The addition of dogbone cutouts will reduce the elastic stiffness of a steel moment frame. A recent study[21] evaluated the reduction in elastic lateral stiffness of steel moment frames due to the addition of circular dogbone cuts at both the top and bottom flange at each moment connection in a frame. This study showed that over a wide range of frame heights and configurations, the average reduction in stiffness for a 50 percent flange reduction was on the order of 6 to 7 percent. For a 40 percent flange reduction, the reduction in elastic

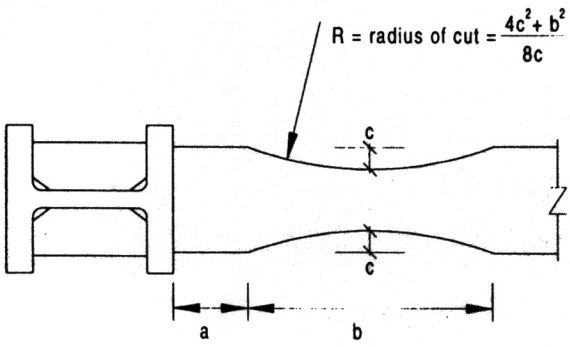

Fig. 13. Geometry of radius cut dogbone.

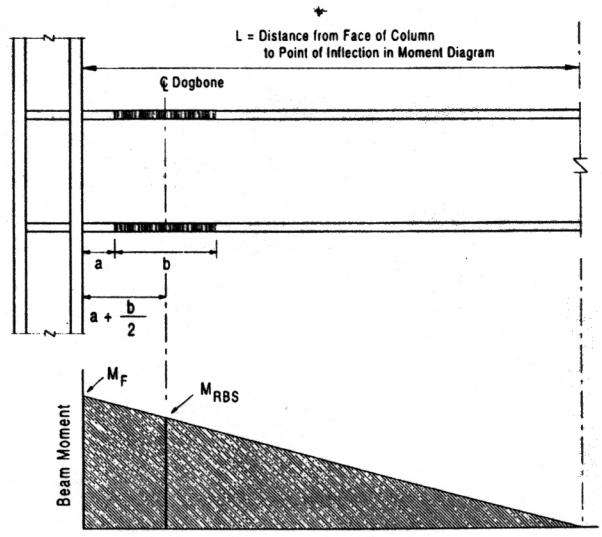

Fig. 14. Assumed moment diagram for design of dogbone cutout.

frame stiffness was on the order of 4 to 5 percent. If the reduction in stiffness is a concern, a refined structural model can be developed to check the stiffness of the frame with the dogbone cutouts.

CONCLUSIONS

Based on the experiments described in this paper, the dogbone appears to be one of the more promising connection concepts for the design of ductile steel moment frames for severe seismic applications. The radius cut dogbone connection appears to be capable of providing a high level of performance and good economy. Since the initial tests were conducted for this program, the writers are aware of at least two additional successful test programs involving the use of radius cut dogbones, by Popov[17] and by Tremblay.[18] The test program by Tremblay included dynamic tests and tests with composite slabs, where the slabs were modified to minimize composite action at the connection. Excellent performance of the radius cut dogbone connection was reported in these tests.

Prior to widespread adoption of the dogbone moment connection, additional research and testing should be done to further evaluate the reliability and limitations of this connection, and to further develop practical design guidelines.

ACKNOWLEDGMENTS

Funding for this test program was provided by W&W Steel Company, the American Institute of Steel Construction, Inc., and the National Science Foundation (Grant Nos. CMS-9358186 and CMS-9416287). The assistance of Nestor Iwankiw and Charlie Carter of AISC, Inc. is gratefully acknowledged.

REFERENCES

1. Engelhardt, M., Winneberger, T., Zekany, A., and Potyraj, T., "The Dogbone Connection, Part II," *Modern Steel Construction*, AISC, Vol. 36, No. 8, August 1996.
2. Federal Emergency Management Agency, "Interim Guidelines: Evaluation, Repair, Modification, and Design of Welded Steel Moment Frame Structures," *Report No. FEMA-267*, August 1995.
3. Federal Emergency Management Agency, "Interim Guidelines Advisory No. 1 - Supplement to FEMA-267," *Report No. FEMA-267A*, March 1997.
4. Engelhardt, M., Sabol, T., Aboutaha, R., and Frank, K., "An Overview of the AISC Northridge Moment Connection Test Program," *Proceedings of AISC National Steel Construction Conference,* San Antonio, TX, AISC, 1995.
5. Engelhardt, M., and Sabol, T., "Reinforcing of Steel Moment Connections with Cover Plates; Benefits and Limitations," *Engineering Structures,* Vol. 20, Nos. 4-6, April-June 1998.
6. Rea, D., Clough, R. W., and Bouwkamp, J. G., "Damping Capacity of a Model Steel Structure," *Report No. EERC 69-14*, Earthquake Engineering Research Center, University of California at Berkeley, Berkeley, CA, December 1969.
7. Plumier, A., "The Dogbone: Back to the Future," *Engineering Journal*, AISC, 2nd Quarter, Vol. 34, No. 2, 1997.
8. Chen, S. J., Yeh, C. H., and Chu, J. M., "Ductile Steel Beam-to-Column Connections for Seismic Resistance," *Journal of Structural Engineering*, ASCE, Vol. 122, No. 11, November 1996.
9. Iwankiw, N. R., and Carter, C. J., "The Dogbone: A New Idea to Chew On," *Modern Steel Construction,* AISC, Vol. 36, No. 4, April 1996.
10. Zekioglu, A., Mozaffarian, H., and Uang, C., "Moment Frame Connection Development and Testing for the City of Hope National Medical Center," *Proceedings; Structures Congress XV,* Portland, American Society of Civil Engineers, 1997.
11. Kaufmann, E., Xue, M., Lu, L., and Fisher, J., "Achieving Ductile Behavior of Moment Connections," *Modern Steel Construction,* AISC, Vol. 36, No. 1, January 1996.
12. Tide, R., "Stability of Weld Metal Subjected to Cyclic Static and Seismic Loading," *Engineering Structures,* Vol. 20, Nos. 4-6, April-June 1998.
13. Popov, E., and Stephen, R., " Cyclic Loading of Full Size Steel Connections," *Bulletin No. 21*, American Iron and Steel Institute, 1972.
14. Tsai, K. C. and Popov, E. P., "Steel Beam-Column Joints In Seismic Moment Resisting Frames", *Report No. UCB/EERC - 88/19*, Earthquake Engineering Research Center, University of California at Berkeley, Berkeley, CA, 1988.
15. Engelhardt, M. D., and Husain, A. S., "Cyclic Loading Performance Of Welded Flange - Bolted Web Connections," *Journal of Structural Engineering*, ASCE, Vol. 119, No. 12, December 1993.
16. Applied Technology Council,*Guidelines for Cyclic Seismic Testing of Components of Steel Structures*, Report No. ATC-24, 1992.
17. Popov, Egor P., Yang, Tzong-Shuoh, and Chang, Shih-Po, "Design of Steel MRF Connections Before and After 1994 Northridge Earthquake," *Proceedings; International Conference on Advances in Steel Structures*, Hong Kong, 1996.
18. Tremblay, R., Tchebotarev, N., and Filiatrault, A., "Seismic Performance of RBS Connections for Steel Moment Resisting Frames: Influence of Loading Rate and Floor Slab," *Proceedings; STESSA '97*, Kyoto, Japan, 1997.
19. Yang, T. S., and Popov, E. P., "Behavior of Pre-Northridge Moment Resisting Connections," *Report No. UCB/EERC - 95/08*, Earthquake Engineering Research Center, University of California at Berkeley, Berkeley, CA, 1995.

20. Iwankiw, N., "Ultimate Strength Considerations for Seismic Design of the Reduced Beam Section (Internal Plastic Hinge)," *Engineering Journal*, AISC, First Quarter, Vol. 34, No. 1, 1997.

21. Grubbs, K. V., "The Effect of the Dogbone Connection on the Elastic Stiffness of Steel Moment Frames," *Master's Thesis*, Department of Civil Engineering, The University of Texas at Austin, Austin, TX, August 1997.