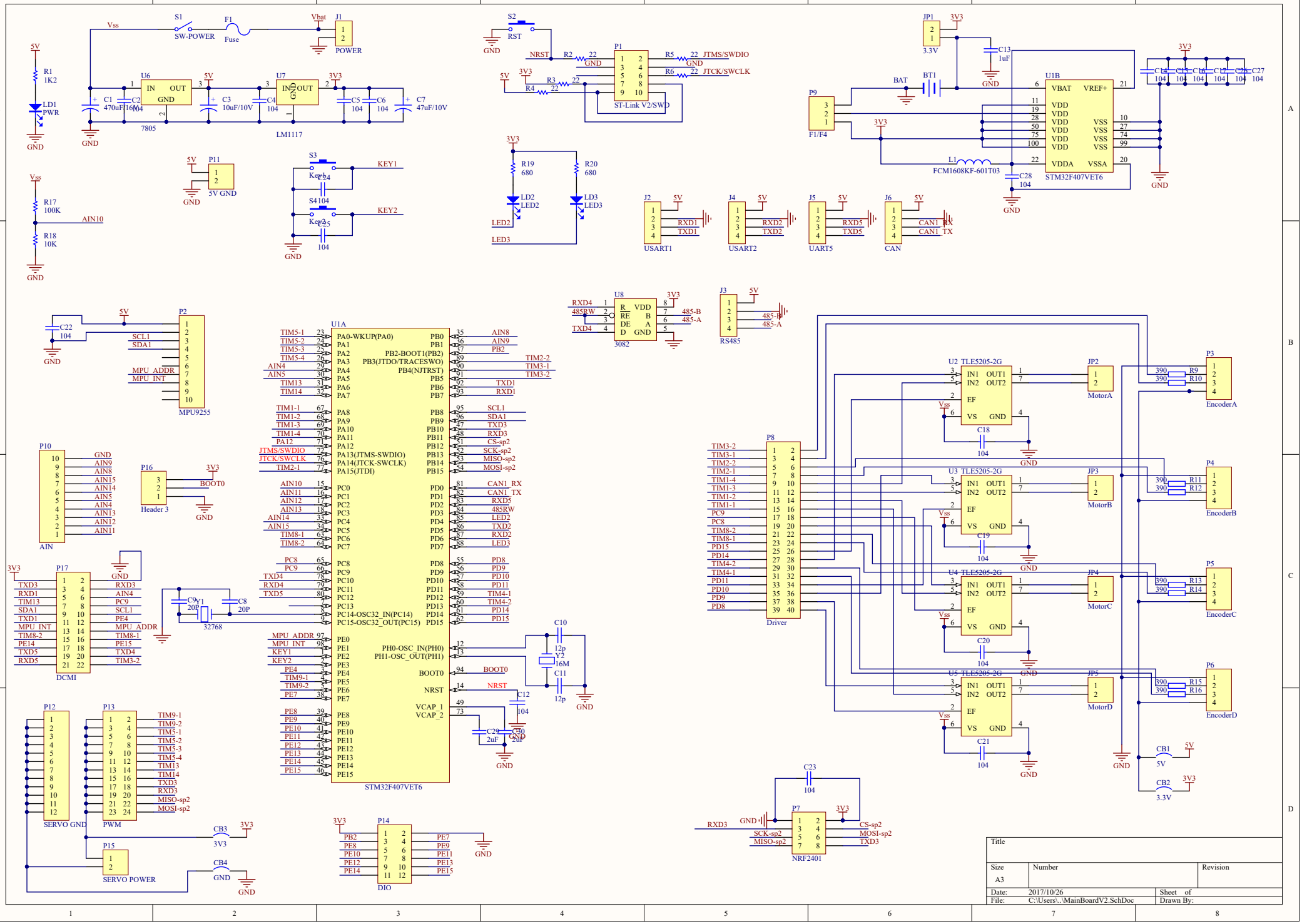
S1
SW-POWER
F1
Fuse
Vbat
J1
POWER
Vss
5V
R1
1K2
LD1
PWR
GND
U6
IN
OUT
GND
7805
C1
470uF/16V
C2
104
U7
IN
OUT
GND
LM1117
C3
10uF/10V
C4
104
3V3
C5
104
C6
104
C7
47uF/10V
S2
RST
NRST
R2
22
P1
ST-Link V2/SWD
R5
22
JTMS/SWDIO
R6
22
JTCK/SWCLK
R3
22
R4
22
JP1
3.3V
C13
1uF
BAT
BT1
P9
F1/F4
U1B
VBAT
VREF+
VDD
VSS
VDDA
VSSA
STM32F407VET6
L1
FCM1608KF-601T03
C28
104
C14
104
C15
104
C16
104
C17
104
C27
104
P11
5V GND
S3
Key1
KEY1
S4
Key2
KEY2
C24
104
C25
104
R17
100K
AIN10
R18
10K
R19
680
R20
680
LD2
LED2
LD3
LED3
J2
USART1
RXD1
TXD1
J4
USART2
RXD2
TXD2
J5
UART5
RXD5
TXD5
J6
CAN
CAN1_RX
CAN1_TX
C22
104
P2
MPU9255
SCL1
SDA1
MPU_ADDR
MPU_INT
U8
3082
RXD4
485RW
TXD4
R
RE
DE
D
VDD
B
A
GND
485-B
485-A
J3
RS485
U1A
STM32F407VET6
PA0-WKUP(PA0)
PA1
PA2
PA3
PA4
PA5
PA6
PA7
PA8
PA9
PA10
PA11
PA12
PA13(JTMS-SWDIO)
PA14(JTCK-SWCLK)
PA15(JTDI)
PC0
PC1
PC2
PC3
PC4
PC5
PC6
PC7
PC8
PC9
PC10
PC11
PC12
PC13
PC14-OSC32_IN(PC14)
PC15-OSC32_OUT(PC15)
PE0
PE1
PE2
PE3
PE4
PE5
PE6
PE7
PE8
PE9
PE10
PE11
PE12
PE13
PE14
PE15
PB0
PB1
PB2-BOOT1(PB2)
PB3(JTDO/TRACESWO)
PB4(NJTRST)
PB5
PB6
PB7
PB8
PB9
PB10
PB11
PB12
PB13
PB14
PB15
PD0
PD1
PD2
PD3
PD4
PD5
PD6
PD7
PD8
PD9
PD10
PD11
PD12
PD13
PD14
PD15
PH0-OSC_IN(PH0)
PH1-OSC_OUT(PH1)
BOOT0
NRST
VCAP_1
VCAP_2
P10
AIN
P16
Header 3
BOOT0
P17
DCMI
Y1
32768
C9
20P
C8
20P
C10
12p
Y2
16M
C11
12p
C12
104
C29
2uF
C30
2uF
P12
SERVO GND
P13
PWM
P15
SERVO POWER
CB3
3V3
CB4
P14
DIO
U2 TLE5205-2G
U3 TLE5205-2G
U4 TLE5205-2G
U5 TLE5205-2G
IN1
IN2
OUT1
OUT2
EF
VS
GND
C18
104
C19
104
C20
104
C21
104
JP2
MotorA
JP3
MotorB
JP4
MotorC
JP5
MotorD
P8
Driver
P3
EncoderA
P4
EncoderB
P5
EncoderC
P6
EncoderD
R9
390
R10
390
R11
390
R12
390
R13
390
R14
390
R15
390
R16
390
CB1
5V
CB2
3.3V
C23
104
P7
NRF2401
CS-sp2
MOSI-sp2
TXD3
SCK-sp2
MISO-sp2
RXD3
Title
Size
A3
Number
Revision
Date:
2017/10/26
File:
C:\Users\..\MainBoardV2.SchDoc
Sheet of
Drawn By:

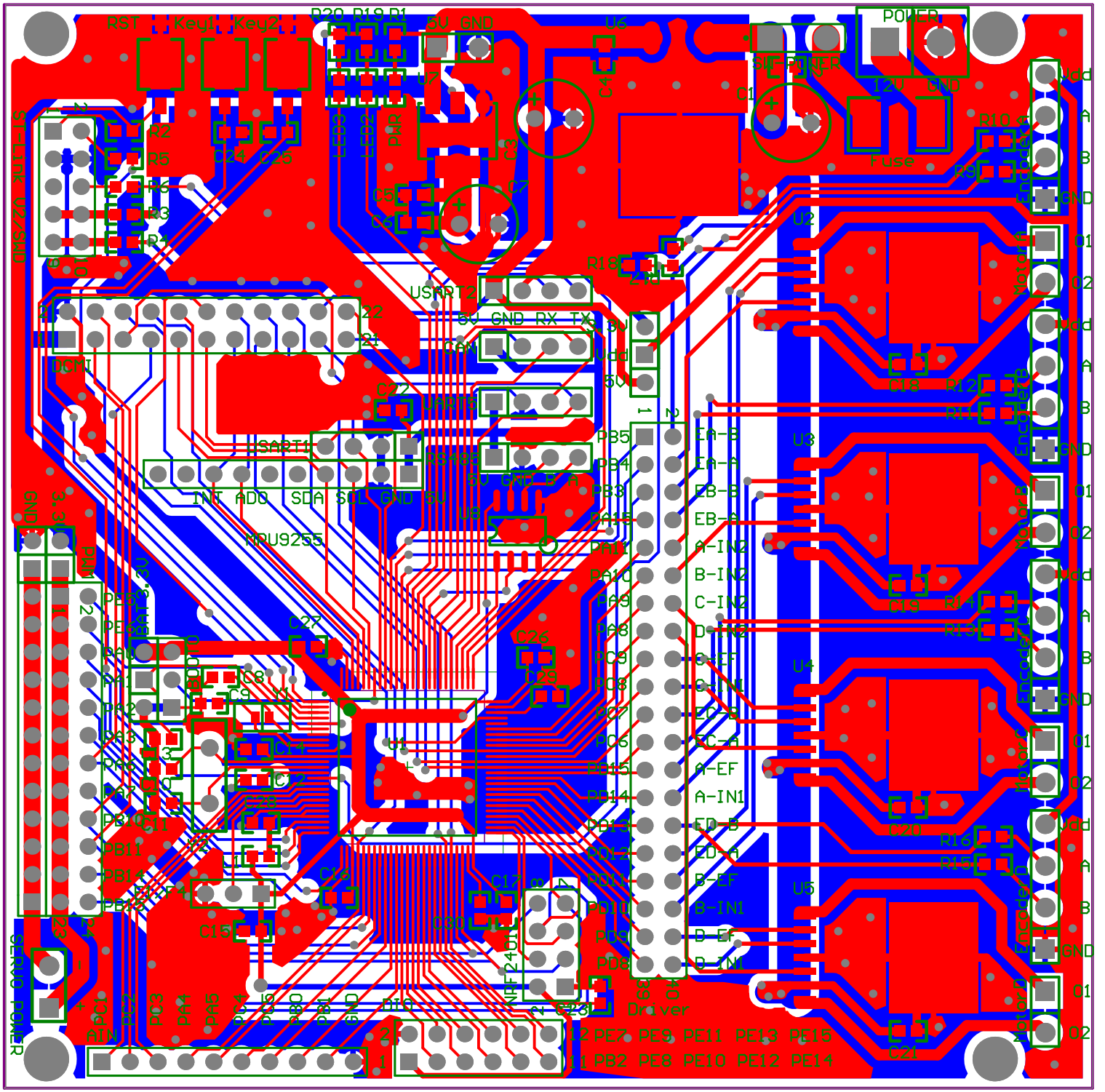
RST
Key1
Key2
POWER
12V GND
Fuse
U2
U3
U4
U5
U6
U1
MPU9255
USART2
USART1
JCMI
Driver
Motor
Encoder
Servo
EMC
PE7 PE9 PE11 PE13 PE15
PE8 PE10 PE12 PE14