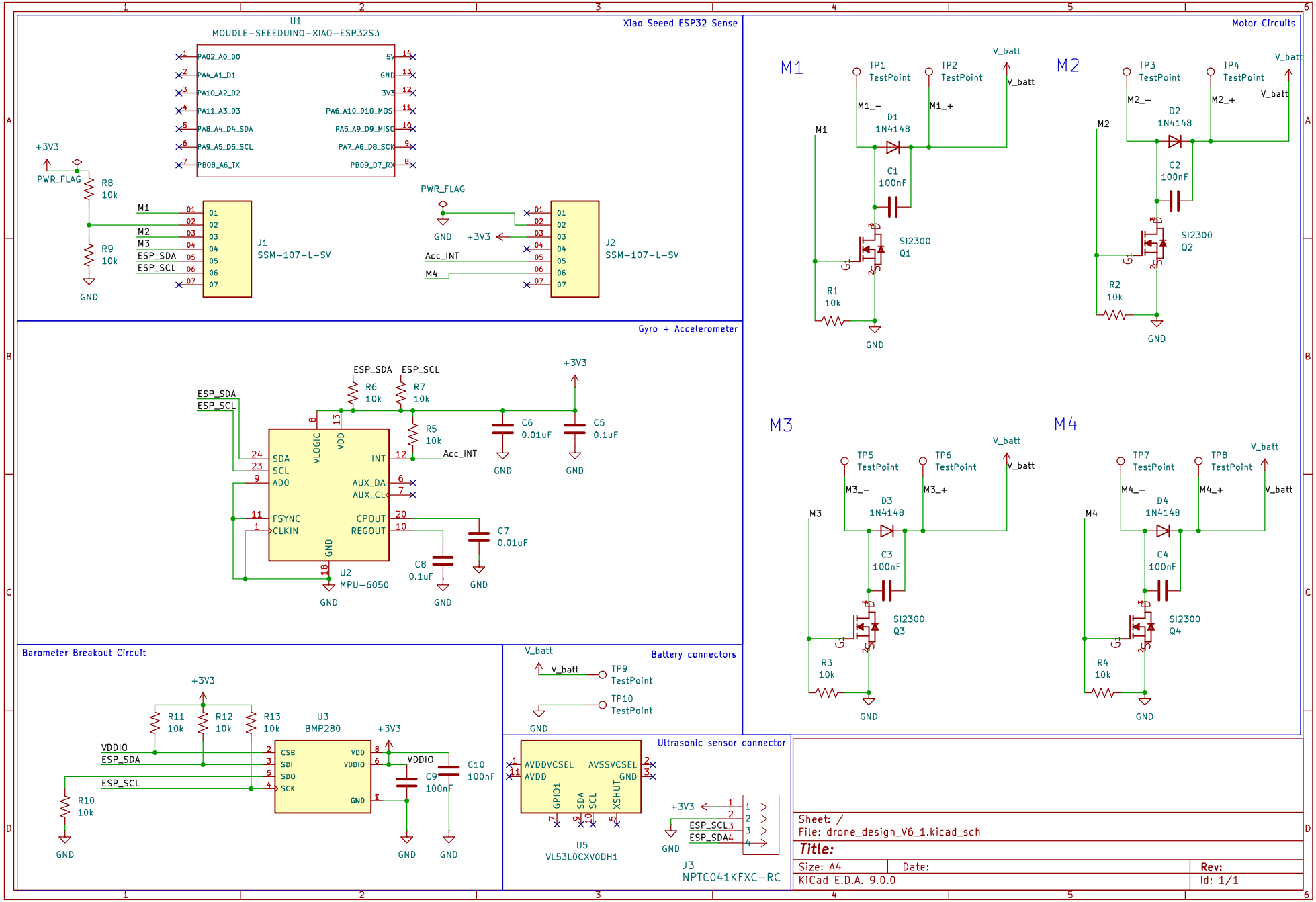
Xiao Seeed ESP32 Sense
U1
MOUDLE-SEEEDUINO-XIAO-ESP32S3
PA02_A0_D0
PA4_A1_D1
PA10_A2_D2
PA11_A3_D3
PA8_A4_D4_SDA
PA9_A5_D5_SCL
PB08_A6_TX
5V
GND
3V3
PA6_A10_D10_MOSI
PA5_A9_D9_MISO
PA7_A8_D8_SCK
PB09_D7_RX
+3V3
PWR_FLAG
R8
10k
R9
10k
GND
M1
M2
M3
ESP_SDA
ESP_SCL
J1
SSM-107-L-SV
PWR_FLAG
GND
+3V3
Acc_INT
M4
J2
SSM-107-L-SV
Gyro + Accelerometer
ESP_SDA
ESP_SCL
R6
10k
R7
10k
+3V3
R5
10k
Acc_INT
C6
0.01uF
C5
0.1uF
GND
GND
SDA
SCL
AD0
FSYNC
CLKIN
VLOGIC
VDD
INT
AUX_DA
AUX_CL
CPOUT
REGOUT
GND
C7
0.01uF
C8
0.1uF
GND
GND
U2
MPU-6050
GND
Motor Circuits
M1
TP1
TestPoint
TP2
TestPoint
V_batt
M1_-
M1_+
D1
1N4148
C1
100nF
SI2300
Q1
R1
10k
GND
M2
TP3
TestPoint
TP4
TestPoint
M2_-
M2_+
D2
1N4148
C2
100nF
SI2300
Q2
R2
10k
GND
M3
TP5
TestPoint
TP6
TestPoint
M3_-
M3_+
D3
1N4148
C3
100nF
SI2300
Q3
R3
10k
GND
M4
TP7
TestPoint
TP8
TestPoint
M4_-
M4_+
D4
1N4148
C4
100nF
SI2300
Q4
R4
10k
GND
Barometer Breakout Circuit
+3V3
R11
10k
R12
10k
R13
10k
U3
BMP280
VDDIO
ESP_SDA
ESP_SCL
CSB
SDI
SDO
SCK
VDD
VDDIO
GND
C9
100nF
C10
100nF
R10
10k
GND
GND
GND
Battery connectors
V_batt
TP9
TestPoint
TP10
TestPoint
GND
Ultrasonic sensor connector
AVDDVCSEL
AVDD
AVSSVCSEL
GND
GPIO1
SDA
SCL
XSHUT
U5
VL53L0CXV0DH1
+3V3
ESP_SCL
ESP_SDA
GND
J3
NPTC041KFXC-RC
Sheet: /
File: drone_design_V6_1.kicad_sch
Title:
Size: A4
Date:
Rev:
KiCad E.D.A. 9.0.0
Id: 1/1