Dwight Look College of
ENGINEERING
TEXAS A&M UNIVERSITY

Sound Localization Robot, Team 5

Bi-Weekly Update 2

Samuel Lackey, Sanjana Pasumarthi, Lucas Kettler, Joshua Teele

TA: Muhammad Bin Mughees
Sponsor: Dr. Moreira

Project Scope

Figure 1. First responder crawls through smoke and broken glass to rescue elderly man from house fire (Independent TV)

- Keeps **first responders safe** by entering hazardous or toxic areas first.
- **Reduces search and rescue time** by avoiding exploring unnecessary paths
- **Reliable in low-visibility** or high-stress conditions (smoke, debris, noise).

Problem: First Responders lack reliable methods for navigating dangerous environments, where visibility is limited, putting both their safety and the victims at risk.

Our Solution: Building a Sound Localization robot that can hear distress calls, pinpoint their direction, and move toward them autonomously, allowing first responders to focus on saving lives instead of risking theirs.

*A smarter, safer, and faster way to locate victims, all while protecting rescuers and saving more lives.

Robot Sub Systems:

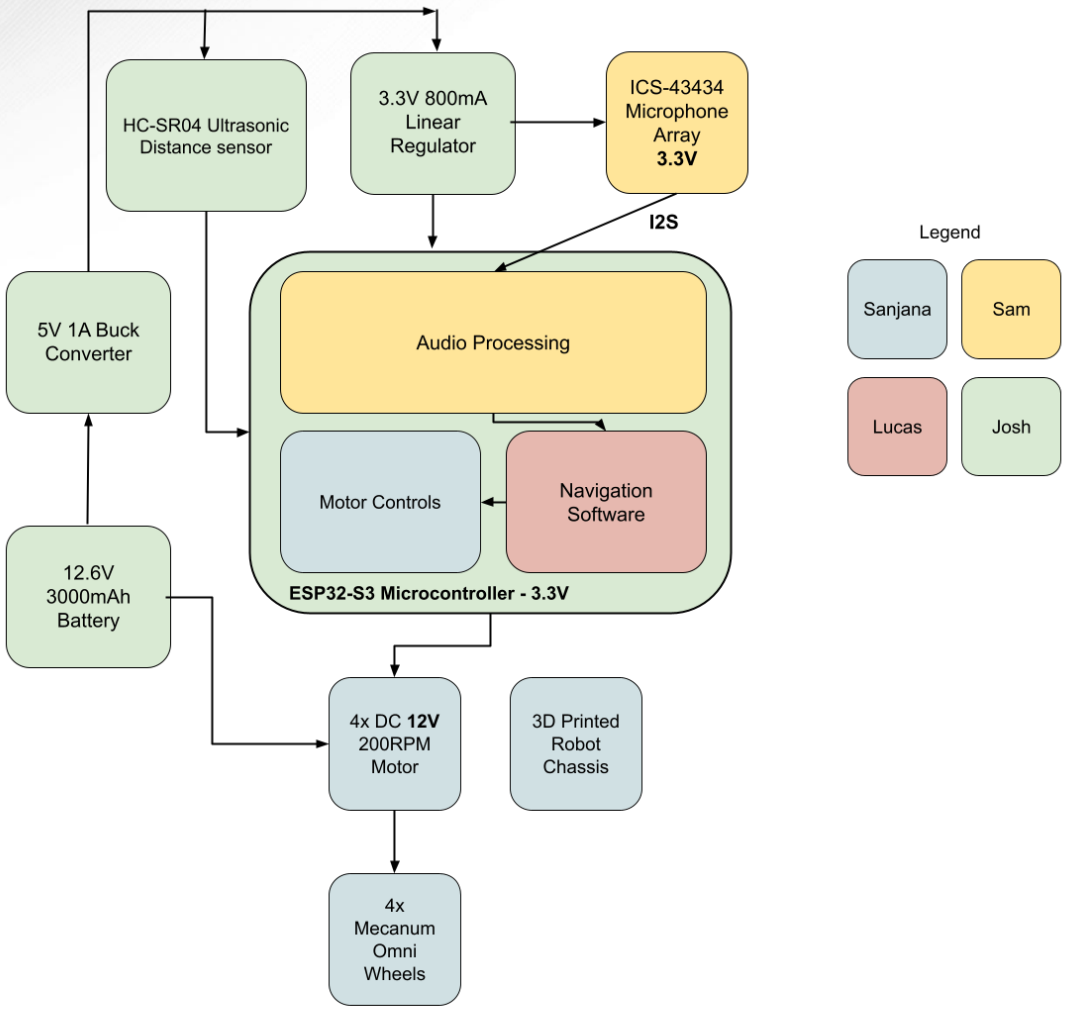

Project Timeline

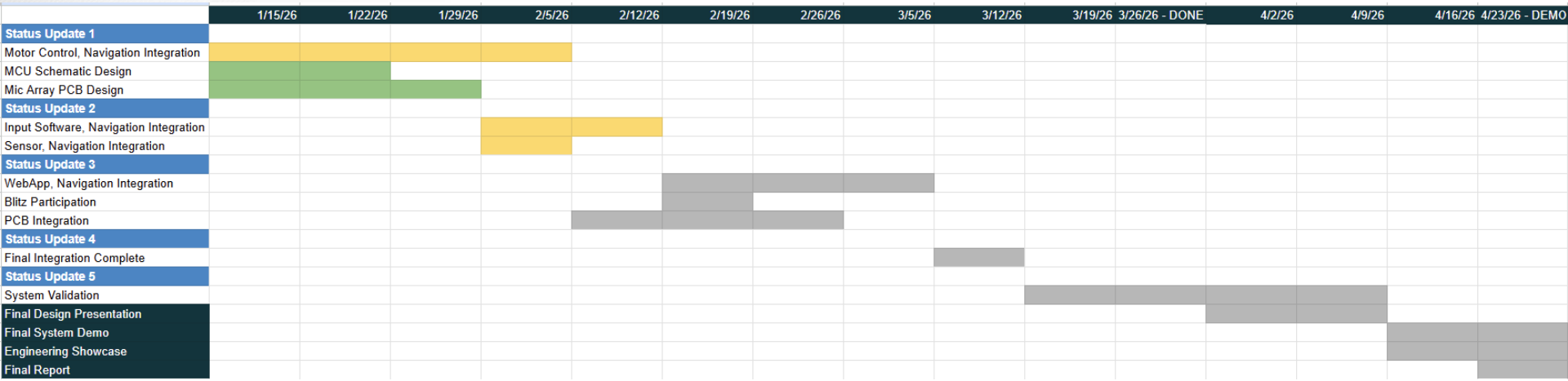

Input Signal Software

Samuel Lackey

Accomplishments since last update : 15 Hours of Effort	Ongoing progress/problems and plans until the next presentation
• Completed Microphone Array PCB • Adapted Sound Localization Algorithm into a single callable function	• Fully incorporate Signal Processing code into navigation subsystem

Input Signal Software

Samuel Lackey

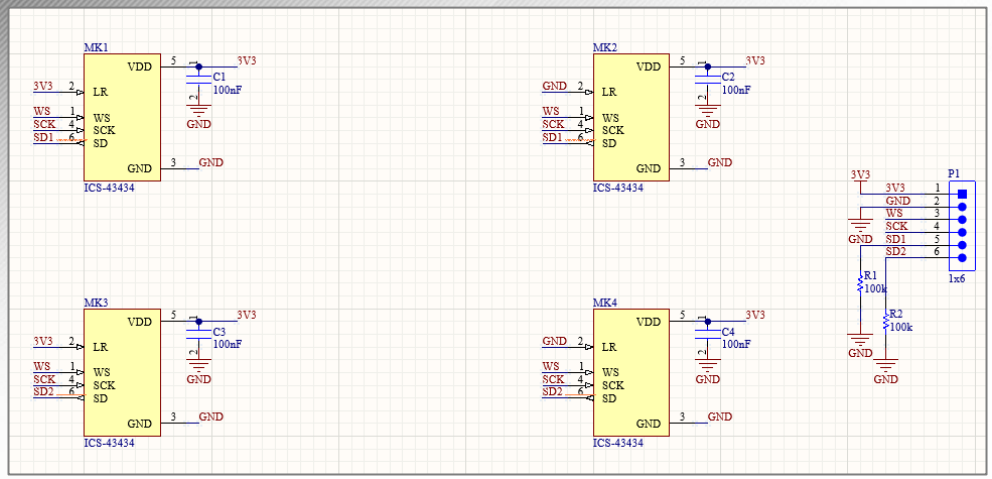

Microphone Array PCB Schematic

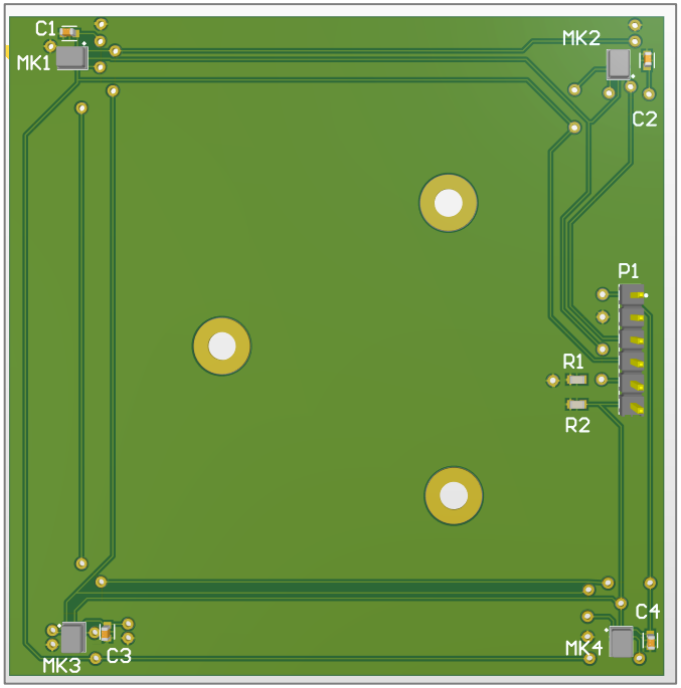

Microphone Array PCB 3D Design

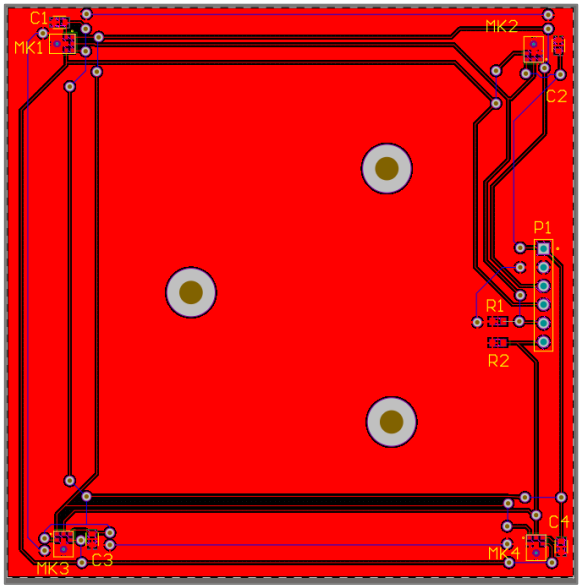

Microphone Array PCB Design

Mechanical/ Motor Controls Subsystem

Sanjana Pasumarthi

Accomplishments since Last Update 12 hours of effort	Ongoing progress/problems and plans until the next presentation
• Completed 3D prints of all parts • Integrated some parts of the navigation system with the motor controls	• Still working on integrating the code with Lucas • Have the webapp's UI complete and display the data (magnitude & direction, pathway, time duration)

Mechanical/ Motor Controls Subsystem

Sanjana Pasumarthi

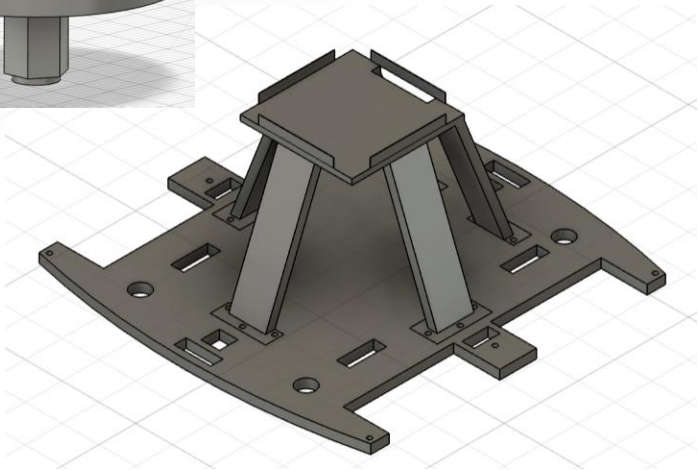

```
void setupAP() {
 Serial.println("Starting WiFi AP...");
 // LED: blinking blue - starting
 for (int i = 0; i < 6; i++) {
  setLED(0, 0, 50);
  delay(200);
  setLED(0, 0, 0);
  delay(200);
 }
WiFi.mode(WIFI_AP);
 WiFi.softAP("Sound_Rover");
 Serial.println(WiFi.softAPSSID());
 Serial.print("AP IP: ");
 Serial.println(WiFi.softAPIP());
 // LED: solid blue - active
 setLED(0, 0, 80);
}
```

- Two-part set up to hold the isolated microphone array
- Top stand is screwed onto the top layer of the chassis

- Set-up the Wi-Fi module for the webapp, still working on the UI
- Implemented necessary pauses before the motors' changes direction

Navigation Software Subsystem

Lucas Kettler

Accomplishments since Last Update 8 hrs of effort	Ongoing progress/problems and plans until the next presentation
• Integration of Motor Controls (Untested) • Integration of Webapp (Untested)	• Validate integration of Motor controls and webapp • Integration of code with Input Software/Sensor Software Code

Dwight Look College of
ENGINEERING
TEXAS A&M UNIVERSITY

Navigation Software Subsystem
Lucas Kettler

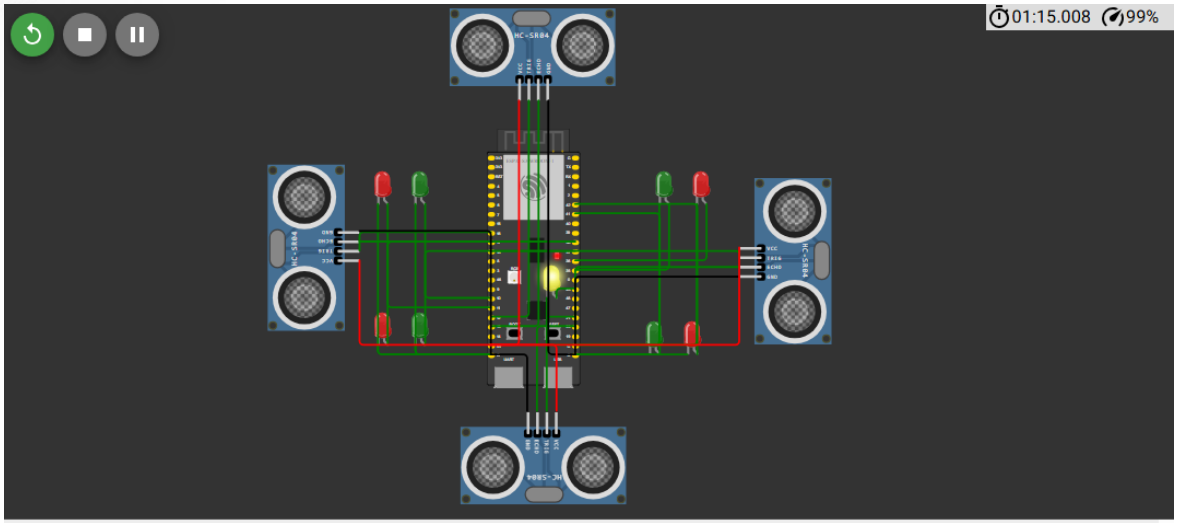


```
. . . . . # . # . . .
. . . # P P P P P . . .
. . . . P # P # P # . .
. . P P P P # . P P # G
. . P . . # . . # P P P
. . P # . . . . . . . .
. . P . . . . . . . . .
. . P . . . . . . . . .
. # P . . . . . . . . .
. P P . . . . . . . . .
. P # . . . . . . . . .
. P . . . . . . . . . .
. P . . . . . . . . . .
# S . . . . . . . . . .
```

Power & Distance Sensor Subsystem

Joshua Teele

Accomplishments since Last Update 10 hrs of effort	Ongoing progress/problems and plans until the next presentation
• Completed PCB design of MCU • Ordered MCU PCB and components	• Solder PCB and test with multimeter • Test individual subsystems on new MCU • Ongoing: Integrate distance sensor code with navigation software

Dwight Look College of
ENGINEERING
TEXAS A&M UNIVERSITY

Power & Distance Sensor Subsystem

Joshua Teele

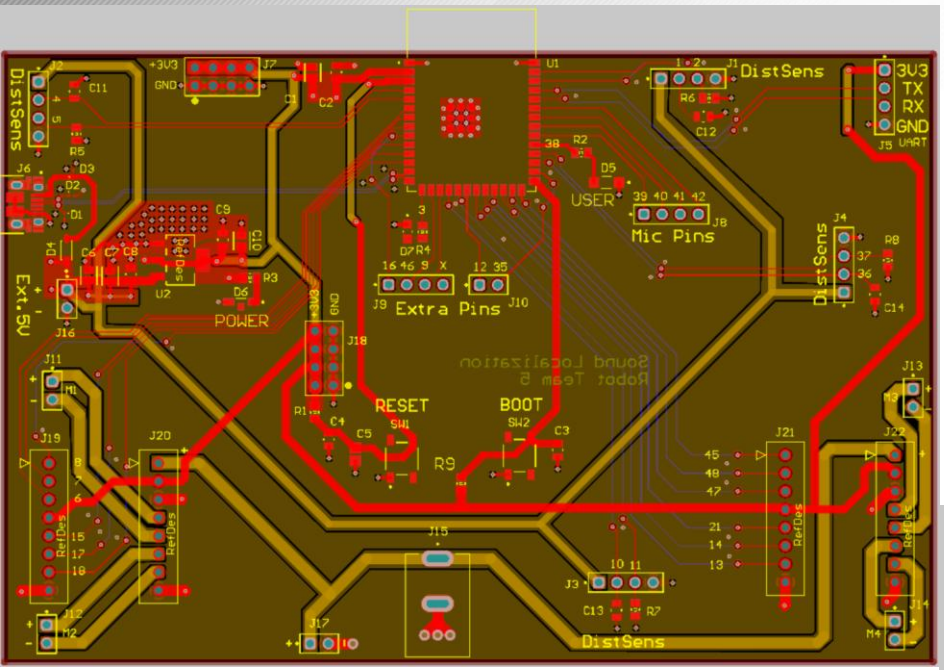

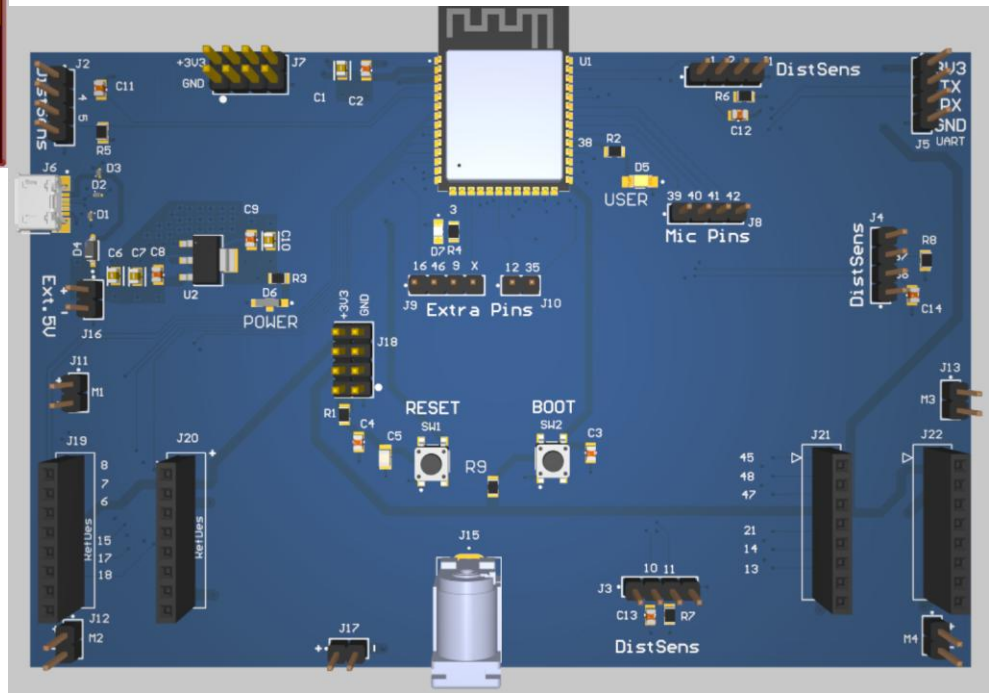

Parts and PCB

Part	Est. Arrival
MCU PCB	Feb 6th
Components for MCU PCB	Acquired
Microphone Array PCB	Feb 10th
Components for Mic Array PCB	Feb 10th

Execution Plan

Tests	1/15/26	1/22/26	1/29/26	2/5/26	2/12/26	2/19/26	2/26/26	3/5/26	3/12/26	3/19/26	3/26/26 - DONE
Motor Controls Subsystem ~ Sanjana Pasumarthi											
Design and 3D Print Proper Wheel Shaft											
Design integrated PCB w/ Josh for power and motor controls											
Design and 3D Print Top Layer											
Integrate Sound Rover Firmware with Navigation & Sound Software & Test Rover											
Navigation Software Subsystem ~ Lucas Kettler											
Integrate with Input Signal Code											
Integrate with Sensor Code											
Integrate with Motor Control Code											
Adapt Grid map for use with web app											
Adapt code from simulation to Real test code											
Power & Distance Sensor Subsystem ~ Joshua Teele											
Design MCU Board											
Solder PCBs											
Integrate Sensor Code with Lucas											
Input Signal Subsystem ~ Samuel Lackey											
Design Microphone Array PCB											
Integrate Input Signal Software with Navigation											
Finalize all Software Integration											
Solder and Connect PCB to Team system											

Validation Plan

Paragraph	Test Name	Success Criteria	Methodology	Status	Responsible Engineer(s)
3.2.1.1	DOA Angle Accuracy	All 5 tests must log a detected angle within an 3.6°	Place speaker playing 450Hz tone at a known angle, and 0.5m distance. Run the detection test 5 times	UNTESTED	Sam
3.2.1.2	DOA With Background Noise	All 5 tests must log a detected angle within an 3.6°	Place speaker playing 450Hz tone at a known angle, and 0.5m distance while separate 550Hz tone is playing. Repeat 5 times	UNTESTED	Sam
3.2.1.3	Obstacle Detection	Verify robot halts movement at the node prior to an object	Isolated test with robot attempting to drive to a goal behind an obstacle	UNTESTED	Lucas, Joshua, Sanjana
3.2.1.4	Grid Mapping	Verify the robot updates a grid map for the web app	View output of webapp upon completion of path	UNTESTED	Lucas, Sanjana
3.2.1.5	Webapp	The webapp must show the angle, estimated distance, and control the robot.	Run the program and connect to wifi, trigger a sound, access the webapp, and move.	UNTESTED	Sam, Sanjana
3.2.1.6	Distance Estimation	The estimated distance must be less than 0.5m of the true distance	Run the distance calibration software, move sound source from 0.5 to 1m to 2m.	UNTESTED	Sam
3.2.2.1	Accurate Robot Movement	Robot moves in intended direction determined by program	Series of coordination tests for the robot to move to the sound source	UNTESTED	Full Team
3.2.2.2	Constant Response rate of robot	Robot has a constant rate of response with +/- 5% of average time	Multiple trials of measuring time it takes for rover to change status	UNTESTED	Full Team
3.2.2.3	Structurally strong Robot	Wheel shaft does not break easily, no unintended movement from motors	Test robot with obstacles and quick movement	UNTESTED	Sanjana
3.2.3.3.1	Input Voltage(USB)	Ensure voltage at USB port is above 4.75V (minimum needed voltage for linear regulator)	Use multimeter to test output of buck converter	UNTESTED	Joshua
3.2.3.3.2	Input Voltage(DC jack)	Ensure voltage at DC jack is between 10.8 and 13.2 V (+/-10% of motor voltage)	Use multimeter to test output of buck converter	UNTESTED	Joshua
N/A	Full System Demo	Robot is able to navigate autonomously around obstacles, reach goal, and display data on app	Multiple observations and trials of robot	UNTESTED	Full Team

Thank You,
Any Questions?

Sound Localization Robot 5 – Team 23

Lucas Kettler, Samuel Lackey, Joshua Teele,
Sanjana Pasumarthi