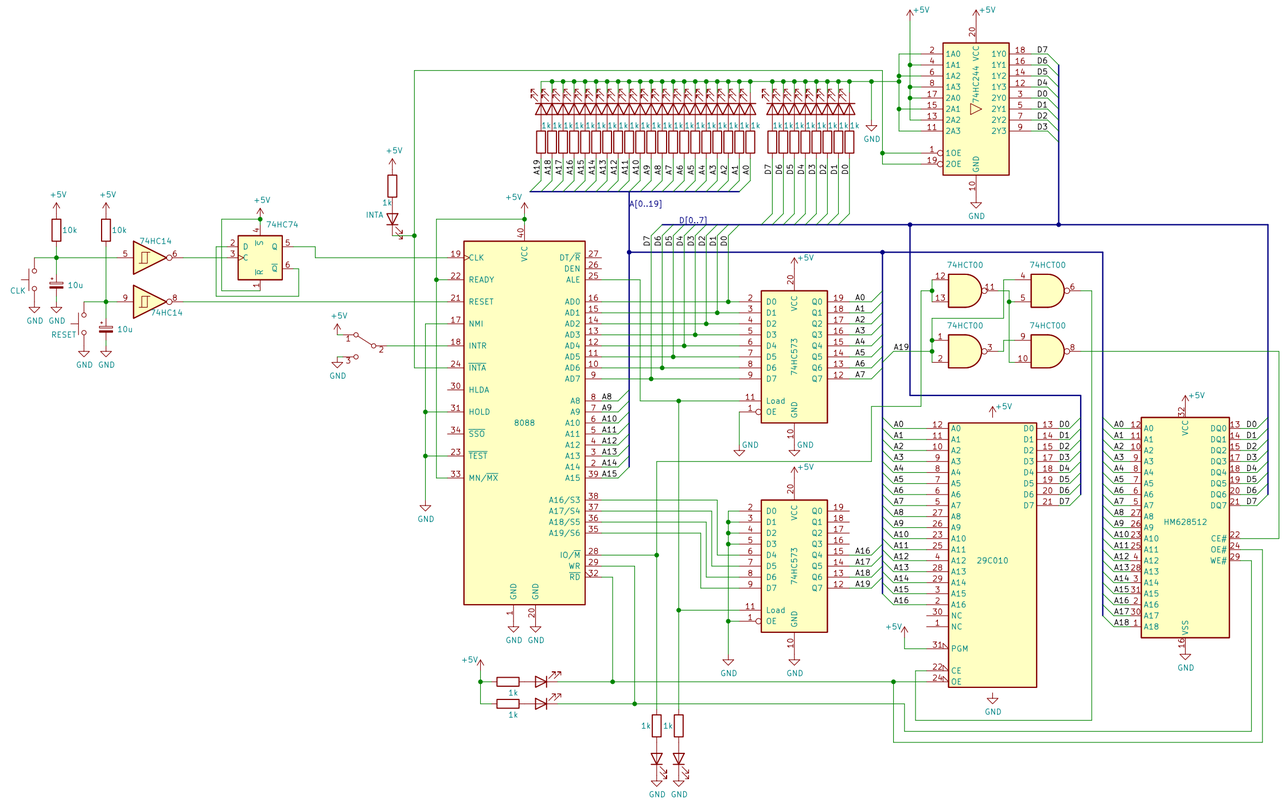

Sheet: /
File: part04_1.kicad_sch

Title:

Size: A2	Date:	Rev:
KiCad E.D.A. eeschema (6.0.2)		Id: 1/1