MP-Element:
A Unified Matpower Element Model

with Corresponding Functions and Derivatives

Ray D. Zimmerman

October 20, 2020

Matpower *Technical Note 5*

© 2019, 2020 Ray D. Zimmerman
All Rights Reserved

Contents

1 Notation **6**

2 Introduction **9**
2.1 Linear Transformations of $\mathbf{f}$ and $\boldsymbol{x}$ . . . 12
2.2 Selected Elements of a Function . . . 13
2.3 Chain Rule Trick . . . 14
2.4 Composition of $\boldsymbol{x}$ . . . 14
2.4.1 AC Model . . . 14
2.4.2 DC Model . . . 15

3 Individual Element **16**
3.1 AC Model . . . 16
3.1.1 Complex Power Injections . . . 17
3.1.2 Complex Current Injections . . . 18
3.2 DC Model . . . 19
3.2.1 Active Power Injections . . . 19

4 Aggregating Elements **20**
4.1 Aggregation by Element Class . . . 20
4.1.1 Forming the Aggregate Model . . . 20
4.1.2 Inputs for the Aggregate Model . . . 21
4.2 Full Network Model . . . 22
4.3 AC Model . . . 23
4.3.1 Complex vs. Real State Vectors . . . 23
4.3.2 Complex Power Injections . . . 24
4.3.3 Complex Current Injections . . . 25
4.4 DC Model . . . 25
4.4.1 Active Power Injections . . . 25

5 Complex Voltages and Derivatives **26**
5.1 Complex . . . 26
5.1.1 First Derivatives . . . 26
5.2 Polar Coordinates . . . 27
5.2.1 First Derivatives . . . 27
5.2.2 Second Derivatives . . . 27
5.3 Cartesian Coordinates . . . 28
5.3.1 First Derivatives . . . 28

5.3.2 Second Derivatives 29

6 Linear Current Injections **30**
6.1 Complex 30
6.1.1 First Derivatives 30
6.2 Polar 30
6.2.1 First Derivatives 30
6.2.2 Second Derivatives 31
6.3 Cartesian 32
6.3.1 First Derivatives 32
6.3.2 Second Derivatives 32

7 Linear Power Injections **33**
7.1 Complex 33
7.1.1 First Derivatives 33
7.2 Polar 33
7.2.1 First Derivatives 33
7.2.2 Second Derivatives 34
7.3 Cartesian 35
7.3.1 First Derivatives 35
7.3.2 Second Derivatives 35

8 Complex Power from Linear Current Term **36**
8.1 Polar 36
8.1.1 First Derivatives 36
8.1.2 Second Derivatives 37
8.2 Cartesian 41
8.2.1 First Derivatives 41
8.2.2 Second Derivatives 42

9 Complex Current from Linear Power Term **45**
9.1 Polar 45
9.1.1 First Derivatives 46
9.1.2 Second Derivatives 47
9.2 Cartesian 51
9.2.1 First Derivatives 51
9.2.2 Second Derivatives 52

10 Square of Complex Port Injections **56**
10.1 First Derivatives 56
10.2 Second Derivatives 56

11 Square of Real Port Injections **57**
11.1 First Derivatives 57
11.2 Second Derivatives 57

12 Node Balance Constraints **58**
12.1 AC Model 58
12.1.1 Power Balance 58
12.1.2 Current Balance 59
12.2 DC Model 59

13 Branch Flow Constraints **60**
13.1 AC Model 60
13.1.1 Squared Apparent Power 60
13.1.2 Squared Current Magnitude 61
13.1.3 Squared Active Power 61
13.2 DC Model 63
13.2.1 Squared Active Power 63

14 Reference Voltage Angle Constraint **64**
14.1 First Derivatives 64
14.2 Second Derivatives 64

15 Voltage Magnitude Limits **65**
15.1 First Derivatives 65
15.2 Second Derivatives 65

16 Voltage Magnitude Squared Limits **66**
16.1 First Derivatives 66
16.2 Second Derivatives 66

17 Branch Angle Difference Limits **67**
17.1 First Derivatives 67
17.2 Second Derivatives 68

18 Acknowledgments **69**

References **70**

1 Notation

Styles

x, θ	real scalars
x, θ	complex scalars
$\boldsymbol{x}, \boldsymbol{\theta}$	real vectors
$\mathbf{x}, \boldsymbol{\theta}$	complex vectors
$\boldsymbol{X}$, $\boldsymbol{\Theta}$	real matrices
$\mathbf{X}, \boldsymbol{\Theta}$	complex matrices
$x, \mathrm{x}, \boldsymbol{x}, \mathbf{x}, \boldsymbol{X}, \mathbf{X}$	variables, functions
$\underline{x}, \underline{\mathrm{x}}, \underline{\boldsymbol{x}}, \underline{\mathbf{x}}, \underline{\boldsymbol{X}}, \underline{\mathbf{X}}$	constants, parameters[1]
$\hat{\boldsymbol{x}}, \hat{\mathbf{x}}, \hat{\boldsymbol{X}}, \hat{\mathbf{X}}$	selected rows of interest of $\boldsymbol{x}, \mathbf{x}, \boldsymbol{X}, \mathbf{X}$, respectively[2]

Operators

$[\mathbf{a}]$	diagonal matrix with vector $\mathbf{a}$ on the diagonal
$\mathbf{A}^\mathsf{T}$	(non-conjugate) transpose of matrix $\mathbf{A}$
a^*, $\mathbf{a}^*$, $\mathbf{A}^*$	complex conjugate of a, $\mathbf{a}$, and $\mathbf{A}$, respectively
$\Re\{\mathbf{a}\}$, $\Im\{\mathbf{a}\}$	real and imaginary parts of $\mathbf{a}$, respectively
$\mathbf{a}^n$	element-wise exponent[3] for vector $\mathbf{a}$
$\mathbf{A}^n$	matrix exponent[3] for matrix $\mathbf{A}$
$a^{\boldsymbol{b}}$, $a^{\boldsymbol{B}}$	element-wise exponent[3] for vector $\boldsymbol{b}$ and matrix $\boldsymbol{B}$, respectively
$\mathrm{f}(\boldsymbol{x}), \mathbf{f}(\boldsymbol{x})$	scalar, vector functions of $\boldsymbol{x}$, respectively
$\mathrm{f}_{\boldsymbol{x}}, \mathbf{f}_{\boldsymbol{x}}$	transpose of gradient of f, Jacobian of $\mathbf{f}$, respectively, w.r.t. $\boldsymbol{x}$
$\mathrm{f}_{\boldsymbol{xx}}, \mathbf{f}_{\boldsymbol{xx}}(\boldsymbol{\lambda})$	Hessian of f, Jacobian of $\mathbf{f}_{\boldsymbol{x}}{}^\mathsf{T}\boldsymbol{\lambda}$, respectively, w.r.t. $\boldsymbol{x}$

[1] Constants and parameters are underlined, with the following exceptions: constants e and j, p, q, m and n when used as dimensions, and i, j, and k as indices.

[2] Obtained by multiplying by matrix $\underline{\boldsymbol{J}}$ (see Section 2.2).

[3] Superscripts may also be used as indices, indicated by context.

Constants and Dimensions

e, j	constants, e is base of natural log (≈ 2.71828), j is $\sqrt{-1}$
n_k, n_n, n_p, n_p^k	number of elements, nodes, ports, ports for element k, respectively
$n_{\mathbf{x}}, n_{\mathbf{v}}, n_{\mathbf{z}}$	dimension of vector $\mathbf{x}$, $\mathbf{v}$, $\mathbf{z}$, respectively.
$\mathbf{1}_n, [\mathbf{1}_n]$	$n \times 1$ vector of all ones, $n \times n$ identity matrix
$\mathbf{0}$	appropriately-sized vector or matrix of all zeros

Variables

v_i	complex voltage at node/port i
u_i, w_i	real and imaginary parts of voltage at node/port i, $\mathrm{v}_i = u_i + jw_i$
ν_i, θ_i	voltage magnitude and angle at node/port i, $\mathrm{v}_i = \nu_i e^{j\ i}$
$\mathbf{v}$	column vector of complex voltages v_i
$\mathbf{e}$	column vector $\mathbf{v}$ with elements scaled to unit magnitude, $\mathbf{e} = e^{j\boldsymbol{\theta}}$
$\boldsymbol{u}, \boldsymbol{w}$	column vectors of real (u_i) and imaginary (w_i) parts of voltage, respectively, $\mathbf{v} = \boldsymbol{u} + j\boldsymbol{w}$
$\boldsymbol{\nu}, \boldsymbol{\theta}$	column vectors of voltage magnitudes ν_i and angles θ_i, respectively, $\mathbf{v} = [\boldsymbol{\nu}]\,\mathbf{e} = [\boldsymbol{\nu}]\,e^{j\boldsymbol{\theta}}$
$\boldsymbol{\Lambda}$	column vector of inverse of complex voltages $\frac{1}{\mathrm{v}_i}$, $\boldsymbol{\Lambda} = \mathbf{v}^{-1}$
$\boldsymbol{z}$	column vector of real non-voltage state variables z_i
$\mathbf{z}$	column vector of complex non-voltage state variables z_i
$\boldsymbol{z}_r, \boldsymbol{z}_i$	column vectors of real and imaginary parts of $\mathbf{z} = \boldsymbol{z}_r + j\boldsymbol{z}_i$

Parameters

$\underline{\boldsymbol{J}_{\boldsymbol{k}}}$	matrix formed by taking selected rows, indexed by vector $\boldsymbol{k}$, from an identity matrix[4]
$\underline{\mathbf{Y}}$	AC model admittance matrix
$\underline{\mathbf{L}}$	linear coefficient (of $\mathbf{z}$) for affine complex current injections
$\underline{\mathbf{i}}$	vector of constant complex current injections
$\underline{\mathbf{M}}$	linear coefficient (of $\mathbf{v}$) for affine complex power injections
$\underline{\mathbf{N}}$	linear coefficient (of $\mathbf{z}$) for affine complex power injections
$\underline{\mathbf{s}}$	vector of constant complex power injections
$\underline{\boldsymbol{B}}$	DC model susceptance matrix
$\underline{\boldsymbol{K}}$	linear coefficient (of $\boldsymbol{z}$) for affine active power injections
$\underline{\boldsymbol{p}}$	vector of constant active power injections
$\underline{\boldsymbol{C}}$	element-node incidence matrix for a given port
$\underline{\boldsymbol{D}}$	element-variable incidence matrix for a given state variable
$\underline{\boldsymbol{A}}$	combined incidence matrix $\underline{\boldsymbol{A}} = \begin{bmatrix} \underline{\boldsymbol{C}} & \mathbf{0} \\ \mathbf{0} & \underline{\boldsymbol{D}} \end{bmatrix}$

[4] Often used simply as $\underline{\boldsymbol{J}}$ without the subscript.

2 Introduction

This document describes the generalized model architecture for MATPOWER [1–3] and shows the network balance and other constraints expressed in terms of complex matrices and how their first and second derivatives can be computed efficiently using complex sparse matrix manipulations. This note includes much that is based on the work documented previously in MATPOWER *Technical Note 2* [4], MATPOWER *Technical Note 3* [5] and MATPOWER *Technical Note 4* [6].

We will be looking at complex functions of the real valued $n \times 1$ vector $\boldsymbol{x}$. For the purposes of illustrating the notation, assume also that $\boldsymbol{x}$ is partitioned into subvectors $\boldsymbol{y}$ and $\boldsymbol{z}$,

$$\boldsymbol{x} = \begin{bmatrix} x_1 \\ \vdots \\ x_n \end{bmatrix} = \begin{bmatrix} \boldsymbol{y} \\ \boldsymbol{z} \end{bmatrix} = \begin{bmatrix} y_1 \\ \vdots \\ y_p \\ z_1 \\ \vdots \\ z_q \end{bmatrix} \tag{2.1}$$

where $\boldsymbol{y}$ is $p \times 1$ and $\boldsymbol{z}$ is $q \times 1$, hence $n = p + q$.

For a complex scalar function $\mathrm{f}\colon \mathbb{R}^n \to \mathbb{C}$ of $\boldsymbol{x}$, we use the following notation for the $1 \times n$ row vector of first derivatives (transpose of the gradient)

$$\mathrm{f}_{\boldsymbol{x}} = \frac{\partial \mathrm{f}}{\partial \boldsymbol{x}} = \begin{bmatrix} \frac{\partial \mathrm{f}}{\partial x_1} & \frac{\partial \mathrm{f}}{\partial x_2} & \cdots & \frac{\partial \mathrm{f}}{\partial x_n} \end{bmatrix} \tag{2.2}$$

$$= \begin{bmatrix} \mathrm{f}_{\boldsymbol{y}} & \mathrm{f}_{\boldsymbol{z}} \end{bmatrix}. \tag{2.3}$$

Using the following notation for the second partial derivatives of f,

$$\mathrm{f}_{\boldsymbol{yz}} = \frac{\partial^2 \mathrm{f}}{\partial \boldsymbol{z} \partial \boldsymbol{y}} = \frac{\partial}{\partial \boldsymbol{z}} \left(\frac{\partial \mathrm{f}}{\partial \boldsymbol{y}} \right)^{\mathsf{T}} = \begin{bmatrix} \frac{\partial^2 \mathrm{f}}{\partial y_1 \partial z_1} & \cdots & \frac{\partial^2 \mathrm{f}}{\partial y_1 \partial z_q} \\ \vdots & \ddots & \vdots \\ \frac{\partial^2 \mathrm{f}}{\partial y_p \partial z_1} & \cdots & \frac{\partial^2 \mathrm{f}}{\partial y_p \partial z_q} \end{bmatrix}, \tag{2.4}$$

the $n \times n$ Hessian of f is

$$\mathrm{f}_{\boldsymbol{xx}} = \frac{\partial^2 \mathrm{f}}{\partial \boldsymbol{x}^2} = \frac{\partial}{\partial \boldsymbol{x}} \left(\frac{\partial \mathrm{f}}{\partial \boldsymbol{x}} \right)^{\mathsf{T}} = \begin{bmatrix} \frac{\partial^2 \mathrm{f}}{\partial x_1^2} & \cdots & \frac{\partial^2 \mathrm{f}}{\partial x_1 \partial x_n} \\ \vdots & \ddots & \vdots \\ \frac{\partial^2 \mathrm{f}}{\partial x_n \partial x_1} & \cdots & \frac{\partial^2 \mathrm{f}}{\partial x_n^2} \end{bmatrix} \tag{2.5}$$

$$= \begin{bmatrix} \mathrm{f}_{\boldsymbol{yy}} & \mathrm{f}_{\boldsymbol{yz}} \\ \mathrm{f}_{\boldsymbol{zy}} & \mathrm{f}_{\boldsymbol{zz}} \end{bmatrix}. \tag{2.6}$$

For a complex vector function $\mathbf{f}\colon \mathbb{R}^n \to \mathbb{C}^m$ of a vector $\boldsymbol{x}$, where

$$\mathbf{f}(\boldsymbol{x}) = \left[\begin{array}{cccc} \mathrm{f}^1(\boldsymbol{x}) & \mathrm{f}^2(\boldsymbol{x}) & \cdots & \mathrm{f}^m(\boldsymbol{x}) \end{array}\right]^{\mathsf{T}}, \tag{2.7}$$

the first derivatives form the $m \times n$ Jacobian matrix, where row i is the transpose of the gradient of f^i.

$$\mathbf{f}_{\boldsymbol{x}} = \frac{\partial \mathbf{f}}{\partial \boldsymbol{x}} = \left[\begin{array}{ccc} \frac{@\mathrm{f}^1}{@x_1} & \cdots & \frac{@\mathrm{f}^1}{@x_n} \\ \vdots & \ddots & \vdots \\ \frac{@\mathrm{f}^m}{@x_1} & \cdots & \frac{@\mathrm{f}^m}{@x_n} \end{array}\right] \tag{2.8}$$

In the derivations in this document, the full 3-dimensional set of second partial derivatives of $\mathbf{f}$, consisting of the Hessians of each element of $\mathbf{f}$, will not be computed. Instead a weighted sum of these Hessians will be formed by computing the Jacobian of the vector function obtained by multiplying the transpose of the Jacobian of $\mathbf{f}$ by a constant real vector $\boldsymbol{\lambda}$. The following notation will be used to denote this $n \times n$ matrix.

$$\mathbf{f}_{\boldsymbol{xx}}(\boldsymbol{\alpha}) = \left(\frac{\partial}{\partial \boldsymbol{x}}\left(\mathbf{f}_{\boldsymbol{x}}{}^{\mathsf{T}}\boldsymbol{\lambda}\right)\right)\bigg|_{\boldsymbol{\lambda}=\boldsymbol{\alpha}} = \sum_{k=1}^{m} \alpha_k \mathrm{f}^k_{\boldsymbol{xx}} \tag{2.9}$$

$$= \left[\begin{array}{cc} \mathbf{f}_{\boldsymbol{yy}}(\boldsymbol{\alpha}) & \mathbf{f}_{\boldsymbol{yz}}(\boldsymbol{\alpha}) \\ \mathbf{f}_{\boldsymbol{zy}}(\boldsymbol{\alpha}) & \mathbf{f}_{\boldsymbol{zz}}(\boldsymbol{\alpha}) \end{array}\right] = \sum_{k=1}^{m} \alpha_k \left[\begin{array}{cc} \mathrm{f}^k_{\boldsymbol{yy}} & \mathrm{f}^k_{\boldsymbol{yz}} \\ \mathrm{f}^k_{\boldsymbol{zy}} & \mathrm{f}^k_{\boldsymbol{zz}} \end{array}\right], \tag{2.10}$$

where

$$\mathbf{f}_{\boldsymbol{yz}}(\boldsymbol{\alpha}) = \left(\frac{\partial}{\partial \boldsymbol{z}}\left(\mathbf{f}_{\boldsymbol{y}}{}^{\mathsf{T}}\boldsymbol{\lambda}\right)\right)\bigg|_{\boldsymbol{\lambda}=\boldsymbol{\alpha}} = \sum_{k=1}^{m} \alpha_k \mathrm{f}^k_{\boldsymbol{yz}}. \tag{2.11}$$

Alternatively, a different matrix of partial derivatives can be formed by computing the Jacobian of the vector function obtained by multiplying the *untransposed* Jacobian of $\mathbf{f}$ by a constant real vector $\boldsymbol{\lambda}$. For this $m \times n$ matrix, the following notation is used.

$$\mathbf{f}_{\overline{\boldsymbol{xx}}}(\boldsymbol{\alpha}) = \left(\frac{\partial}{\partial \boldsymbol{x}}\left(\mathbf{f}_{\boldsymbol{x}}\boldsymbol{\lambda}\right)\right)\bigg|_{\boldsymbol{\lambda}=\boldsymbol{\alpha}} = \left[\begin{array}{c} \boldsymbol{\alpha}^{\mathsf{T}}\mathrm{f}^1_{\boldsymbol{xx}} \\ \vdots \\ \boldsymbol{\alpha}^{\mathsf{T}}\mathrm{f}^m_{\boldsymbol{xx}} \end{array}\right] \tag{2.12}$$

$$= \left[\begin{array}{cc} \boldsymbol{\alpha}_{\boldsymbol{y}}{}^{\mathsf{T}}\mathrm{f}^1_{\boldsymbol{yy}} + \boldsymbol{\alpha}_{\boldsymbol{z}}{}^{\mathsf{T}}\mathrm{f}^1_{\boldsymbol{zy}} & \boldsymbol{\alpha}_{\boldsymbol{y}}{}^{\mathsf{T}}\mathrm{f}^1_{\boldsymbol{yz}} + \boldsymbol{\alpha}_{\boldsymbol{z}}{}^{\mathsf{T}}\mathrm{f}^1_{\boldsymbol{zz}} \\ & \vdots \\ \boldsymbol{\alpha}_{\boldsymbol{y}}{}^{\mathsf{T}}\mathrm{f}^m_{\boldsymbol{yy}} + \boldsymbol{\alpha}_{\boldsymbol{z}}{}^{\mathsf{T}}\mathrm{f}^m_{\boldsymbol{zy}} & \boldsymbol{\alpha}_{\boldsymbol{y}}{}^{\mathsf{T}}\mathrm{f}^m_{\boldsymbol{yz}} + \boldsymbol{\alpha}_{\boldsymbol{z}}{}^{\mathsf{T}}\mathrm{f}^m_{\boldsymbol{zz}} \end{array}\right] \tag{2.13}$$

$$= \left[\begin{array}{cc} \mathbf{f}_{\overline{\boldsymbol{yy}}}(\boldsymbol{\alpha}_{\boldsymbol{y}}) + \mathbf{f}_{\overline{\boldsymbol{zy}}}(\boldsymbol{\alpha}_{\boldsymbol{z}}) & \mathbf{f}_{\overline{\boldsymbol{yz}}}(\boldsymbol{\alpha}_{\boldsymbol{y}}) + \mathbf{f}_{\overline{\boldsymbol{zz}}}(\boldsymbol{\alpha}_{\boldsymbol{z}}) \end{array}\right], \tag{2.14}$$

where $\boldsymbol{\lambda}$ and $\boldsymbol{\alpha}$ are partitioned into $\boldsymbol{\lambda}_y$, $\boldsymbol{\lambda}_z$ and $\boldsymbol{\alpha}_y$, $\boldsymbol{\alpha}_z$, respectively, and

$$\mathbf{f}_{\overline{yz}}(\boldsymbol{\alpha}_y) = \left(\frac{\partial}{\partial \boldsymbol{z}}\left(\mathbf{f}_{\boldsymbol{y}}\boldsymbol{\lambda}_y\right)\right)\Bigg|_{\boldsymbol{\lambda}_y=\boldsymbol{\alpha}_y} = \begin{bmatrix} \boldsymbol{\alpha}_y{}^{\mathsf{T}}\mathrm{f}^1_{\boldsymbol{yz}} \\ \vdots \\ \boldsymbol{\alpha}_y{}^{\mathsf{T}}\mathrm{f}^m_{\boldsymbol{yz}} \end{bmatrix}, \tag{2.15}$$

$$\mathbf{f}_{\overline{zy}}(\boldsymbol{\alpha}_z) = \left(\frac{\partial}{\partial \boldsymbol{y}}\left(\mathbf{f}_{\boldsymbol{z}}\boldsymbol{\lambda}_z\right)\right)\Bigg|_{\boldsymbol{\lambda}_z=\boldsymbol{\alpha}_z} = \begin{bmatrix} \boldsymbol{\alpha}_z{}^{\mathsf{T}}\mathrm{f}^1_{\boldsymbol{zy}} \\ \vdots \\ \boldsymbol{\alpha}_z{}^{\mathsf{T}}\mathrm{f}^m_{\boldsymbol{zy}} \end{bmatrix}. \tag{2.16}$$

The second derivatives in this alternative form are not yet derived in this document but would be useful, for example, for efficiently computing the optimal multiplier for Newton step-sizes in a Newton power flow.

2.1 Linear Transformations of $\mathbf{f}$ and $\boldsymbol{x}$

Suppose we have a function $\mathbf{g}$ that is a linear transformation of $\mathbf{f}$ by a matrix $\mathbf{A}$,

$$\mathbf{g}(\boldsymbol{x}) = \mathbf{A}\mathbf{f}(\boldsymbol{x}), \tag{2.17}$$

and a variable $\boldsymbol{z}$ is obtained via a linear transformation of the variable $\boldsymbol{x}$ by the matrix $\mathbf{B}$.

$$\boldsymbol{z} = \mathbf{B}\boldsymbol{x} \tag{2.18}$$

Then let $\mathbf{h}$ be a new function that combines these two linear transformations.

$$\mathbf{h}(\boldsymbol{x}) = \mathbf{g}(\boldsymbol{z}) = \mathbf{g}(\mathbf{B}\boldsymbol{x}) \tag{2.19}$$
$$= \mathbf{A}\mathbf{f}(\boldsymbol{z}) = \mathbf{A}\mathbf{f}(\mathbf{B}\boldsymbol{x}) \tag{2.20}$$

Then the derivatives of $\mathbf{h}$ can be expressed in terms of the derivatives of $\mathbf{f}$ as follows.

$$\mathbf{h}_{\boldsymbol{x}} = \frac{\partial \mathbf{h}}{\partial \boldsymbol{x}} = \mathbf{A}\frac{\partial \mathbf{f}}{\partial \boldsymbol{z}}\frac{\partial \boldsymbol{z}}{\partial \boldsymbol{x}} \tag{2.21}$$
$$= \mathbf{A}\mathbf{f}_{\boldsymbol{z}}\mathbf{B} \tag{2.22}$$

$$\mathbf{h}_{\boldsymbol{xx}}(\boldsymbol{\alpha}) = \left(\frac{\partial}{\partial \boldsymbol{x}}\left(\mathbf{h}_{\boldsymbol{x}}{}^{\mathsf{T}}\boldsymbol{\lambda}\right)\right)\Big|_{\boldsymbol{\lambda}=\boldsymbol{\alpha}} \tag{2.23}$$
$$= \left(\frac{\partial}{\partial \boldsymbol{z}}\left(\mathbf{h}_{\boldsymbol{x}}{}^{\mathsf{T}}\boldsymbol{\lambda}\right)\frac{\partial \boldsymbol{z}}{\partial \boldsymbol{x}}\right)\Big|_{\boldsymbol{\lambda}=\boldsymbol{\alpha}} \tag{2.24}$$
$$= \left(\frac{\partial}{\partial \boldsymbol{z}}\left(\mathbf{B}^{\mathsf{T}}\mathbf{f}_{\boldsymbol{z}}{}^{\mathsf{T}}\mathbf{A}^{\mathsf{T}}\boldsymbol{\lambda}\right)\mathbf{B}\right)\Big|_{\boldsymbol{\lambda}=\boldsymbol{\alpha}} \tag{2.25}$$
$$= \left(\mathbf{B}^{\mathsf{T}}\frac{\partial}{\partial \boldsymbol{z}}\left(\mathbf{f}_{\boldsymbol{z}}{}^{\mathsf{T}}\boldsymbol{\mu}\right)\mathbf{B}\right)\Big|_{\boldsymbol{\mu}=\mathbf{A}^{\mathsf{T}}\boldsymbol{\alpha}} \tag{2.26}$$
$$= \mathbf{B}^{\mathsf{T}}\mathbf{f}_{\boldsymbol{zz}}(\mathbf{A}^{\mathsf{T}}\boldsymbol{\alpha})\mathbf{B} \tag{2.27}$$

To summarize, for a function $\mathbf{f}(\boldsymbol{x})$, whose derivatives $\mathbf{f}_{\boldsymbol{x}}$ and $\mathbf{f}_{\boldsymbol{xx}}(\boldsymbol{\alpha})$ we know, and a function $\mathbf{h}$, defined in terms of $\mathbf{f}$ as

$$\mathbf{h}(\boldsymbol{x}) = \mathbf{A}\mathbf{f}(\mathbf{B}\boldsymbol{x}), \tag{2.28}$$

the derivatives of $\mathbf{h}$ are given by

$$\mathbf{h}_{\boldsymbol{x}} = \mathbf{A}\mathbf{f}_{\boldsymbol{x}}\mathbf{B} \tag{2.29}$$
$$\mathbf{h}_{\boldsymbol{xx}}(\boldsymbol{\alpha}) = \mathbf{B}^{\mathsf{T}}\mathbf{f}_{\boldsymbol{xx}}(\mathbf{A}^{\mathsf{T}}\boldsymbol{\alpha})\mathbf{B}. \tag{2.30}$$

2.2 Selected Elements of a Function

Consider the case when only a subset of the elements of a vector function $\mathbf{f}$ is of interest. Rather than calculating all terms, then selecting the subset of elements of interest, we want to maximize computational efficiency by avoiding the calculation of unused terms.

To this end, we want to express all functions and derivatives in a form that facilitates the use of only the required elements.

Suppose, we are interested a subset of m elements of the $n \times 1$ vector function $\mathbf{f}$, namely the elements indexed by the $m \times 1$ vector $\boldsymbol{k}$, or $\mathbf{f}_{\{\boldsymbol{k}\}}$, where each element of $\boldsymbol{k}$ is unique. If we define the $m \times n$ matrix $\underline{\boldsymbol{J}}_{\boldsymbol{k}}$ as the m rows, indexed by $\boldsymbol{k}$, of an $n \times n$ identity matrix, then we can define the subset $\hat{\mathbf{f}}$ of $\mathbf{f}$ as follows.

$$\hat{\mathbf{f}} \equiv \underline{\boldsymbol{J}}_{\boldsymbol{k}}\mathbf{f} = \mathbf{f}_{\{\boldsymbol{k}\}} = \begin{bmatrix} \mathrm{f}_{k_1} \\ \mathrm{f}_{k_2} \\ \vdots \\ \mathrm{f}_{k_m} \end{bmatrix} \tag{2.31}$$

A similar notation is used to denote selecting a subset of the rows of a matrix $\mathbf{A}$ corresponding to a vector $\boldsymbol{k}$ of row indices.

$$\hat{\mathbf{A}} \equiv \underline{\boldsymbol{J}}_{\boldsymbol{k}}\mathbf{A} \tag{2.32}$$

For simplicity of notation, the $\boldsymbol{k}$ subscript for $\underline{\boldsymbol{J}}$ will typically be omitted, with $\underline{\boldsymbol{J}}$ generically denoting the matrix used to select the desired rows of a post-multiplied matrix or vector.

It follows from the definition of $\underline{\boldsymbol{J}}$ that

$$\underline{\boldsymbol{J}}\underline{\boldsymbol{J}}^{\mathsf{T}} = [\mathbf{1}_m] \tag{2.33}$$

and $\underline{\boldsymbol{J}}^{\mathsf{T}}\underline{\boldsymbol{J}}$ is an $n \times n$ identity matrix with diagonal terms zeroed out for rows not included in $\boldsymbol{k}$. Some other useful relationships, using vector $\mathbf{g}$ and matrix $\mathbf{A}$, follow.

$$[\hat{\mathbf{g}}] = [\underline{\boldsymbol{J}}\mathbf{g}] = \underline{\boldsymbol{J}}\,[\mathbf{g}]\,\underline{\boldsymbol{J}}^{\mathsf{T}} \tag{2.34}$$

$$[\hat{\mathbf{g}}]\,\underline{\boldsymbol{J}} = \underline{\boldsymbol{J}}\,[\mathbf{g}] \tag{2.35}$$

$$\underline{\boldsymbol{J}}^{\mathsf{T}}\,[\hat{\mathbf{g}}] = [\mathbf{g}]\,\underline{\boldsymbol{J}}^{\mathsf{T}} \tag{2.36}$$

$$\underline{\boldsymbol{J}}\,[\mathbf{g}]\,\mathbf{A} = [\hat{\mathbf{g}}]\,\hat{\mathbf{A}} \tag{2.37}$$

$$\underline{\boldsymbol{A}}^{\mathsf{T}}\,[\mathbf{g}]\,\underline{\boldsymbol{J}}^{\mathsf{T}} = \hat{\mathbf{A}}^{\mathsf{T}}\,[\hat{\mathbf{g}}] \tag{2.38}$$

2.3 Chain Rule Trick

One common operation encountered in these derivations is the element-wise multiplication of a vector $\mathbf{a}$ by a vector $\mathbf{b}$ to form a new vector $\mathbf{c}$ of the same dimension, which can be expressed in either of the following forms

$$\mathbf{c} = [\mathbf{a}]\,\mathbf{b} = [\mathbf{b}]\,\mathbf{a} \tag{2.39}$$

It is useful to note that the derivative of such a vector can be calculated by the chain rule as

$$\mathbf{c}_{\boldsymbol{x}} = \frac{\partial \mathbf{c}}{\partial \boldsymbol{x}} = [\mathbf{a}]\,\frac{\partial \mathbf{b}}{\partial \boldsymbol{x}} + [\mathbf{b}]\,\frac{\partial \mathbf{a}}{\partial \boldsymbol{x}} = [\mathbf{a}]\,\mathbf{b}_{\boldsymbol{x}} + [\mathbf{b}]\,\mathbf{a}_{\boldsymbol{x}} \tag{2.40}$$

2.4 Composition of $\boldsymbol{x}$

The unified element model described here will always have a vector of state variables consisting of the voltages at each terminal as well as optional additional non-voltage state variables.

2.4.1 AC Model

The AC model is defined in terms of a complex state vector $\mathbf{x}$, consisting of complex voltages $\mathbf{v}$ and complex non-voltage state variables $\mathbf{z}$.

$$\mathbf{x} = \begin{bmatrix} \mathbf{v} \\ \mathbf{z} \end{bmatrix} \tag{2.41}$$

The complex vectors $\mathbf{x}$, $\mathbf{v}$ and $\mathbf{z}$ are actually functions of the corresponding real vectors $\boldsymbol{x}$, $\boldsymbol{v}$, and $\boldsymbol{z}$ consisting of the real components of the complex values. For the purposes of this document, two options will be considered, one with voltages $\mathbf{v}$ expressed in polar coordinates and the other in cartesian coordinates, with the non-voltage state $\mathbf{z}$ using cartesian coordinates in both cases.

Real Vectors

Polar	Cartesian	
$\boldsymbol{v} = \begin{bmatrix} \boldsymbol{\theta} \\ \boldsymbol{\nu} \end{bmatrix}$	$\boldsymbol{v} = \begin{bmatrix} \boldsymbol{u} \\ \boldsymbol{w} \end{bmatrix}$	(2.42)
$\boldsymbol{z} = \begin{bmatrix} \boldsymbol{z}_r \\ \boldsymbol{z}_i \end{bmatrix}$	$\boldsymbol{z} = \begin{bmatrix} \boldsymbol{z}_r \\ \boldsymbol{z}_i \end{bmatrix}$	(2.43)
$\boldsymbol{x} = \begin{bmatrix} \boldsymbol{v} \\ \hdashline \boldsymbol{z} \end{bmatrix} = \begin{bmatrix} \boldsymbol{\theta} \\ \boldsymbol{\nu} \\ \hdashline \boldsymbol{z}_r \\ \boldsymbol{z}_i \end{bmatrix}$	$\boldsymbol{x} = \begin{bmatrix} \boldsymbol{v} \\ \hdashline \boldsymbol{z} \end{bmatrix} = \begin{bmatrix} \boldsymbol{u} \\ \boldsymbol{w} \\ \hdashline \boldsymbol{z}_r \\ \boldsymbol{z}_i \end{bmatrix}$	(2.44)

Complex Vectors

Polar	Cartesian	
$\mathbf{v}(\boldsymbol{v}) = \boldsymbol{\nu} e^{j\boldsymbol{\theta}}$	$\mathbf{v}(\boldsymbol{v}) = \boldsymbol{u} + j\boldsymbol{w}$	(2.45)
$\mathbf{z}(\boldsymbol{z}) = \boldsymbol{z}_r + j\boldsymbol{z}_i$	$\mathbf{z}(\boldsymbol{z}) = \boldsymbol{z}_r + j\boldsymbol{z}_i$	(2.46)
$\mathbf{x}(\boldsymbol{x}) = \begin{bmatrix} \mathbf{v}(\boldsymbol{v}) \\ \mathbf{z}(\boldsymbol{z}) \end{bmatrix}$	$\mathbf{x}(\boldsymbol{x}) = \begin{bmatrix} \mathbf{v}(\boldsymbol{v}) \\ \mathbf{z}(\boldsymbol{z}) \end{bmatrix}$	(2.47)

For a given function of the complex vector $\mathbf{x}$, for example $\mathbf{g}(\mathbf{x})$, we will use $\mathbf{g}(\boldsymbol{x})$ as shorthand notation to refer to the equivalent function of the corresponding real $\boldsymbol{x}$, that is, to refer to $\mathbf{g}(\mathbf{x}(\boldsymbol{x}))$. While the AC model itself is expressed directly in terms of the complex state vector $\mathbf{x}$ (e.g. $\mathbf{g}(\mathbf{x})$), with its components $\mathbf{v}$ and $\mathbf{z}$, the derivatives are based on the real valued state vector $\boldsymbol{x}$ and its 4 real components from (2.44) (e.g. $\mathbf{g}_{\boldsymbol{x}}$ and $\mathbf{g}_{\boldsymbol{xx}}(\boldsymbol{\lambda})$).

2.4.2 DC Model

The DC model is defined in terms of a real state vector $\boldsymbol{x}$ consisting of the voltage angles $\boldsymbol{\theta}$ and non-voltage state variables $\boldsymbol{z}$.

$$\boldsymbol{x} = \begin{bmatrix} \boldsymbol{\theta} \\ \boldsymbol{z} \end{bmatrix} \tag{2.48}$$

3 Individual Element

For a given model and formulation, a generic element with n_p ports is defined by (1) a vector of state variables, which may vary depending on the model and formulation, and (2) functions of that state representing the injections at each port. The first part of the state always represents the voltage at each port, e.g. complex voltages for the AC model and voltage angles for the DC model.

3.1 AC Model

For the AC model, shown in Figure 1, the state vector $\mathbf{x}$ begins with the $n_p \times 1$ vector $\mathbf{v}$ of complex voltages at the n_p ports, and may include an $n_\mathbf{z} \times 1$ real vector of additional state variables $\mathbf{z}$, for a total of $n_\mathbf{x}$ state variables.

$$\mathbf{x} = \begin{bmatrix} \mathbf{v} \\ \mathbf{z} \end{bmatrix} \tag{3.1}$$

The port injection functions for the model, both complex power injection $\mathbf{g}^S(\mathbf{x})$ and complex current injection $\mathbf{g}^I(\mathbf{x})$, are defined by three terms, a linear current injection component $\mathbf{i}^{lin}(\mathbf{x})$, a linear power injection component $\mathbf{s}^{lin}(\mathbf{x})$, and an arbitrary nonlinear component, $\mathbf{s}^{nln}(\mathbf{x})$ or $\mathbf{i}^{nln}(\mathbf{x})$, respectively.

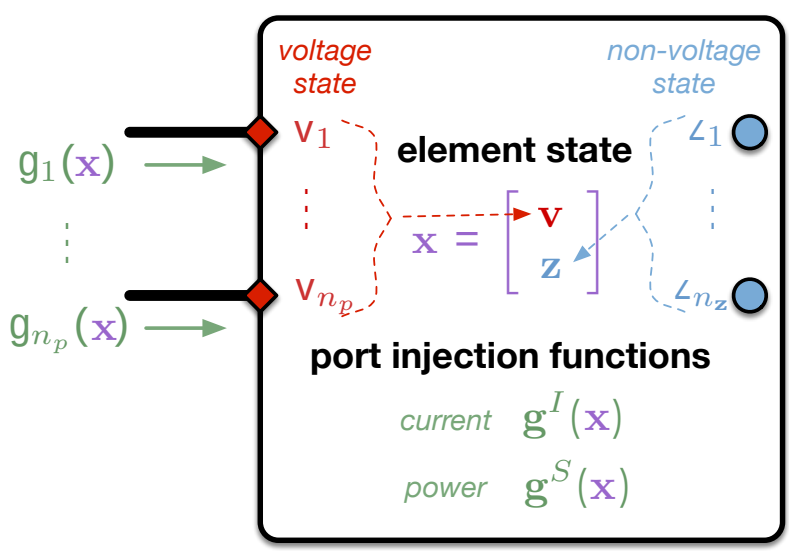

Figure 1: AC Model for Element with n_p Ports

The linear current and power injection components are expressed in terms of the six parameters, $\underline{\mathbf{Y}}$, $\underline{\mathbf{L}}$, $\underline{\mathbf{M}}$, $\underline{\mathbf{N}}$, $\underline{\mathbf{i}}$, and $\underline{\mathbf{s}}$. The admittance matrix $\underline{\mathbf{Y}}$ and linear power coefficient matrix $\underline{\mathbf{M}}$ are $n_p \times n_p$, linear coefficient matrices $\underline{\mathbf{L}}$ and $\underline{\mathbf{N}}$ are $n_p \times n_{\mathbf{z}}$, and $\underline{\mathbf{i}}$ and $\underline{\mathbf{s}}$ are $n_p \times 1$ vectors of constant current and power injections.

$$\mathbf{i}^{lin}(\mathbf{x}) = \begin{bmatrix} \underline{\mathbf{Y}} & \underline{\mathbf{L}} \end{bmatrix} \mathbf{x} + \underline{\mathbf{i}} \tag{3.2}$$
$$= \underline{\mathbf{Y}}\mathbf{v} + \underline{\mathbf{L}}\mathbf{z} + \underline{\mathbf{i}} \tag{3.3}$$

$$\mathbf{s}^{lin}(\mathbf{x}) = \begin{bmatrix} \underline{\mathbf{M}} & \underline{\mathbf{N}} \end{bmatrix} \mathbf{x} + \underline{\mathbf{s}} \tag{3.4}$$
$$= \underline{\mathbf{M}}\mathbf{v} + \underline{\mathbf{N}}\mathbf{z} + \underline{\mathbf{s}} \tag{3.5}$$

Note that the arbitrary *nonlinear* injection component, represented by either $\mathbf{s}^{nln}$ or $\mathbf{i}^{nln}$, corresponds to a single set of injections represented either as a complex power injection or as a complex current injection, but not both. Since the functions represent the same set of injections, they are not additive components, but rather must be related to one another by the following relationship.

$$\mathbf{s}^{nln}(\mathbf{x}) = [\mathbf{v}] \left(\mathbf{i}^{nln}(\mathbf{x})\right)^* \tag{3.6}$$

3.1.1 Complex Power Injections

To facilitate the derivations of the derivatives of each term, we define $\mathbf{s}^{l}(\mathbf{x})$ to be the power injection corresponding to the linear current term.

$$\mathbf{s}^{l}(\mathbf{x}) = [\mathbf{v}] \left(\mathbf{i}^{lin}(\mathbf{x})\right)^* \tag{3.7}$$

Then the port injection function for complex power and its derivatives can be written as follows,

$$\mathbf{g}^{S}(\mathbf{x}) = \mathbf{s}^{l}(\mathbf{x}) + \mathbf{s}^{lin}(\mathbf{x}) + \mathbf{s}^{nln}(\mathbf{x}) \tag{3.8}$$
$$= [\mathbf{v}] \left(\mathbf{i}^{lin}(\mathbf{x})\right)^* + \mathbf{s}^{lin}(\mathbf{x}) + \mathbf{s}^{nln}(\mathbf{x}) \tag{3.9}$$
$$= [\mathbf{v}] \left(\underline{\mathbf{Y}}\mathbf{v} + \underline{\mathbf{L}}\mathbf{z} + \underline{\mathbf{i}}\right)^* + \underline{\mathbf{M}}\mathbf{v} + \underline{\mathbf{N}}\mathbf{z} + \underline{\mathbf{s}} + \mathbf{s}^{nln}(\mathbf{x}) \tag{3.10}$$

$$\mathbf{g}^{S}_{\boldsymbol{x}} = \mathbf{s}^{l}_{\boldsymbol{x}} + \mathbf{s}^{lin}_{\boldsymbol{x}} + \mathbf{s}^{nln}_{\boldsymbol{x}} \tag{3.11}$$

$$\mathbf{g}^{S}_{\boldsymbol{xx}}(\boldsymbol{\lambda}) = \mathbf{s}^{l}_{\boldsymbol{xx}}(\boldsymbol{\lambda}) + \mathbf{s}^{lin}_{\boldsymbol{xx}}(\boldsymbol{\lambda}) + \mathbf{s}^{nln}_{\boldsymbol{xx}}(\boldsymbol{\lambda}) \tag{3.12}$$

where the derivatives of $\mathbf{s}^{lin}$ and $\mathbf{s}^{l}$ are derived in Sections 7 and 8, respectively, and the derivatives of $\mathbf{s}^{nln}$ are assumed to be provided explicitly.

3.1.2 Complex Current Injections

Similarly, we define $\mathbf{i}^{S}(\mathbf{x})$ to be the current injection corresponding to the linear power term.

$$\mathbf{i}^{S}(\mathbf{x}) = \left[\mathbf{s}^{lin}(\mathbf{x})\right]^{*}\boldsymbol{\Lambda}^{*} \tag{3.13}$$

where $\boldsymbol{\Lambda}$ is shorthand for $\mathbf{v}^{-1}$.

Then the port injection function for complex current and its derivatives can be written as follows,

$$\begin{aligned}
\mathbf{g}^{l}(\mathbf{x}) &= \mathbf{i}^{lin}(\mathbf{x}) + \mathbf{i}^{S}(\mathbf{x}) + \mathbf{i}^{nln}(\mathbf{x}) && (3.14)\\
&= \mathbf{i}^{lin}(\mathbf{x}) + \left[\mathbf{s}^{lin}(\mathbf{x})\right]^{*}\boldsymbol{\Lambda}^{*} + \mathbf{i}^{nln}(\mathbf{x}) && (3.15)\\
&= \underline{\mathbf{Y}}\mathbf{v} + \underline{\mathbf{L}}\mathbf{z} + \underline{\mathbf{i}} + [\underline{\mathbf{M}}\mathbf{v} + \underline{\mathbf{N}}\mathbf{z} + \underline{\mathbf{s}}]^{*}\boldsymbol{\Lambda}^{*} + \mathbf{i}^{nln}(\mathbf{x}) && (3.16)
\end{aligned}$$

$$\mathbf{g}^{l}_{\boldsymbol{x}} = \mathbf{i}^{lin}_{\boldsymbol{x}} + \mathbf{i}^{S}_{\boldsymbol{x}} + \mathbf{i}^{nln}_{\boldsymbol{x}} \tag{3.17}$$

$$\mathbf{g}^{l}_{\boldsymbol{xx}}(\boldsymbol{\lambda}) = \mathbf{i}^{lin}_{\boldsymbol{xx}}(\boldsymbol{\lambda}) + \mathbf{i}^{S}_{\boldsymbol{xx}}(\boldsymbol{\lambda}) + \mathbf{i}^{nln}_{\boldsymbol{xx}}(\boldsymbol{\lambda}) \tag{3.18}$$

where the derivatives of $\mathbf{i}^{lin}$ and $\mathbf{i}^{S}$ are derived in Sections 6 and 9, respectively, and the derivatives of $\mathbf{i}^{nln}$ are assumed to be provided explicitly.

3.2 DC Model

For the DC model, the state vector $\boldsymbol{x}$ is real and begins with the $n_p \times 1$ vector $\boldsymbol{\theta}$ of voltage angles at the n_p ports, and may include an $n_z \times 1$ real vector of additional state variables $\boldsymbol{z}$, for a total of n_x state variables.

$$\boldsymbol{x} = \begin{bmatrix} \boldsymbol{\theta} \\ \boldsymbol{z} \end{bmatrix} \tag{3.19}$$

The port injection function in this case defines the active power port injections as a linear function of a set of parameters $\underline{\boldsymbol{B}}$, $\underline{\boldsymbol{K}}$ and $\underline{\boldsymbol{p}}$, where $\underline{\boldsymbol{B}}$ is an $n_p \times n_p$ susceptance matrix, $\underline{\boldsymbol{K}}$ is an $n_p \times n_z$ matrix coefficient for a linear power injection function, and $\underline{\boldsymbol{p}}$ is an $n_p \times 1$ constant power injection.

3.2.1 Active Power Injections

$$\boldsymbol{g}^P(\boldsymbol{x}) = \begin{bmatrix} \underline{\boldsymbol{B}} & \underline{\boldsymbol{K}} \end{bmatrix} \boldsymbol{x} + \underline{\boldsymbol{p}} \tag{3.20}$$

$$= \underline{\boldsymbol{B}}\boldsymbol{\theta} + \underline{\boldsymbol{K}}\boldsymbol{z} + \underline{\boldsymbol{p}} \tag{3.21}$$

$$\boldsymbol{g}_{\boldsymbol{x}}^P = \begin{bmatrix} \underline{\boldsymbol{B}} & \underline{\boldsymbol{K}} \end{bmatrix} \tag{3.22}$$

4 Aggregating Elements

4.1 Aggregation by Element Class

Given a set or class[5] of n_k elements with a uniform number of ports (n_p) and state variables ($n_{\mathbf{x}}$), it is often convenient to aggregate the models together, with all of their variables, parameters and functions, and treat the set as a single large element with $n_k \times n_p$ ports and $n_k \times n_{\mathbf{x}}$ state variables.

4.1.1 Forming the Aggregate Model

Parameters $\underline{\mathbf{Y}}$ and $\underline{\mathbf{s}}$ from the AC model will be used to demonstrate how the aggregation is done, but the process is the same for all variables, parameters and functions. That is, matrices $\underline{\mathbf{L}}$, $\underline{\mathbf{M}}$, $\underline{\mathbf{N}}$, $\underline{\boldsymbol{B}}$, and $\underline{\boldsymbol{K}}$ are handled just like $\underline{\mathbf{Y}}$, and vector variables $\mathbf{v}$, $\mathbf{z}$, $\boldsymbol{\theta}$, parameters $\underline{\mathbf{i}}$, $\underline{\boldsymbol{p}}$, and functions $\mathbf{i}^{nln}$, and $\mathbf{s}^{nln}$ are handled just like vector parameter $\underline{\mathbf{s}}$.

Indexing the parameters and functions for a single element k, as $\underline{\mathbf{Y}}^k$, $\underline{\mathbf{L}}^k$, $\underline{\mathbf{i}}^k$, $\underline{\mathbf{M}}^k$, $\underline{\mathbf{N}}^k$, $\underline{\mathbf{s}}^k$, $\mathbf{i}^{nln;k}$, $\mathbf{s}^{nln;k}$, $\underline{\boldsymbol{B}}^k$, $\underline{\boldsymbol{K}}^k$, and $\underline{\boldsymbol{p}}^k$ we first take each scalar entry (i.e. from each row i and column j) of each parameter,

$$\underline{\mathbf{Y}}^k = \begin{bmatrix} \underline{y}^k_{11} & \cdots & \underline{y}^k_{1n_p} \\ \vdots & \ddots & \vdots \\ \underline{y}^k_{n_p1} & \cdots & \underline{y}^k_{n_pn_p} \end{bmatrix}, \qquad \underline{\mathbf{s}}^k = \begin{bmatrix} \underline{s}^k_1 \\ \vdots \\ \underline{s}^k_{n_p} \end{bmatrix}, \tag{4.1}$$

and define a corresponding "stacked" matrix or vector version of the entry drawn from all n_k network elements. Individual matrix entries are stacked with k going from 1 to n_k along the diagonal to form a corresponding diagonal matrix. Similarly, individual vector entries are stacked vertically to form a corresponding column vector, as follows.

$$\underline{\mathbf{Y}}_{ij} = \begin{bmatrix} \underline{y}^1_{ij} & & \\ & \ddots & \\ & & \underline{y}^{n_k}_{ij} \end{bmatrix}, \qquad \underline{\mathbf{s}}_i = \begin{bmatrix} \underline{s}^1_i \\ \vdots \\ \underline{s}^{n_k}_i \end{bmatrix} \tag{4.2}$$

[5] E.g. Each of the following could be considered its own separate class of elements: AC transmission lines, two-winding transformers, three-winding transformers, generators, non-dispatchable ZIP loads, shunts, DC transmission lines, etc.

The full set of parameters for the aggregate element can then be assembled from these "stacked" parameters as

$$\underline{\mathbf{Y}} = \begin{bmatrix} \underline{\mathbf{Y}}_{11} & \cdots & \underline{\mathbf{Y}}_{1n_p} \\ \vdots & \ddots & \vdots \\ \underline{\mathbf{Y}}_{n_p1} & \cdots & \underline{\mathbf{Y}}_{n_pn_p} \end{bmatrix}, \qquad \underline{\mathbf{s}} = \begin{bmatrix} \underline{\mathbf{s}}_1 \\ \vdots \\ \underline{\mathbf{s}}_{n_p} \end{bmatrix}. \tag{4.3}$$

Assembling aggregate versions of all of the parameters and functions in this way yields a model of the aggregate $(n_k \times n_p)$–port device whose port injections are expressed by (3.10) and (3.16) for AC formulations, or (3.21) for the DC formulation.

4.1.2 Inputs for the Aggregate Model

For a given class c of n_p^c–port elements to be aggregated as described above, let us denote the corresponding aggregate variables, parameters and functions with the superscript c.

Given that each port of the aggregate element c is connected to one of the n_n network nodes, and using the AC model for illustration, the appropriate port voltage vector $\mathbf{v}^c$ for this connected aggregate model is constructed from the corresponding node voltages $\mathbf{v}$ using a set of n_p^c element-node incidence matrices $\underline{\boldsymbol{C}}_j^c$, where j is the index for the port number, ranging from 1 to n_p^c. That is, the dimension of $\underline{\boldsymbol{C}}_j^c$ is $n_n \times n_k^c$, and its (i,k) element is 1 if port j of element k is connected to node i, and 0 otherwise.

Stacking these per-port incidence matrices horizontally to form

$$\underline{\boldsymbol{C}}^c = \begin{bmatrix} \underline{\boldsymbol{C}}_1^c & \cdots & \underline{\boldsymbol{C}}_{n_p^c}^c \end{bmatrix} \tag{4.4}$$

yields

$$\mathbf{v}^c = \underline{\boldsymbol{C}}^{c\mathsf{T}}\mathbf{v} \tag{4.5}$$

$$\begin{bmatrix} \mathbf{v}_1^c \\ \vdots \\ \mathbf{v}_{n_p^c}^c \end{bmatrix} = \begin{bmatrix} \underline{\boldsymbol{C}}_1^{c\mathsf{T}} \\ \vdots \\ \underline{\boldsymbol{C}}_{n_p^c}^{c\ \mathsf{T}} \end{bmatrix} \mathbf{v}. \tag{4.6}$$

where $\mathbf{v}_j^c$ is the $n_k^c \times 1$ vector of port j voltages for all n_k^c elements.

If each individual element in class c has $n_{\mathbf{z}}^c$ non-voltage state variables ($\mathbf{z}$ variables), indexed by j, a similar incidence matrix $\underline{\boldsymbol{D}}_j^c$ can be used to select from the full system $\mathbf{z}$ the subset of state variables corresponding to variable j for the aggregate element for all of class c. That is, the dimension of $\underline{\boldsymbol{D}}_j^c$ is $n_{\mathbf{z}} \times n_{\mathbf{z}}^c$, and its (i,k)

element is 1 if the j

Stacking the $\underline{\boldsymbol{C}}^c$ and $\underline{\boldsymbol{D}}^c$ incidence matrices horizontally as well, results in corresponding incidence matrices for the full system model.

$$\underline{\boldsymbol{C}}^s = \begin{bmatrix} \underline{\boldsymbol{C}}^1 & \cdots & \underline{\boldsymbol{C}}^{n_c} \end{bmatrix} \quad \underline{\boldsymbol{D}}^s = \begin{bmatrix} \underline{\boldsymbol{D}}^1 & \cdots & \underline{\boldsymbol{D}}^{n_c} \end{bmatrix} \quad \underline{\boldsymbol{A}}^s = \begin{bmatrix} \underline{\boldsymbol{C}}^s & \mathbf{0} \\ \mathbf{0} & \underline{\boldsymbol{D}}^s \end{bmatrix} \tag{4.13}$$

This gives us the state variables for the full network model. Here $\mathbf{v}^s$ represents the port voltages for all network elements, expressed in terms of the network node voltages $\mathbf{v}$.

$$\mathbf{v}^s = \underline{\boldsymbol{C}}^{s\mathsf{T}}\mathbf{v} \tag{4.14}$$

$$\mathbf{z}^s = \underline{\boldsymbol{D}}^{s\mathsf{T}}\mathbf{z} \tag{4.15}$$

$$\mathbf{x}^s = \underline{\boldsymbol{A}}^{s\mathsf{T}}\mathbf{x} \tag{4.16}$$

Similarly for the DC model.

$$\boldsymbol{\theta}^s = \underline{\boldsymbol{C}}^{s\mathsf{T}}\boldsymbol{\theta} \tag{4.17}$$

$$\boldsymbol{z}^s = \underline{\boldsymbol{D}}^{s\mathsf{T}}\boldsymbol{z} \tag{4.18}$$

$$\boldsymbol{x}^s = \underline{\boldsymbol{A}}^{s\mathsf{T}}\boldsymbol{x} \tag{4.19}$$

Note: In general, the element classes and the full vector $\mathbf{z}$ of all non-voltage state variables can always be ordered such that $\underline{\boldsymbol{D}}^s$ is an identity matrix, that is, $\mathbf{z}^s = \mathbf{z}$.

The aggregate models, whether for a single class of elements or for the entire network, then take the following form, where we drop the c or s superscripts for simplicity and use the $\mathbf{x}$, $\mathbf{v}$, and $\mathbf{z}$ variables based on the network node voltages (as opposed to port voltages) and full system state variables.

4.3 AC Model

4.3.1 Complex vs. Real State Vectors

As described in Section 2.4.1, the complex vector $\mathbf{x}$ is defined as a function of a corresponding real vector $\boldsymbol{x}$, as in (2.44) and (2.47). Likewise, complex $\mathbf{v}$ is a function of real $\boldsymbol{v}$ (i.e. of $\boldsymbol{\theta}$ and $\boldsymbol{\nu}$, or of $\boldsymbol{u}$ and $\boldsymbol{w}$), and complex $\mathbf{z}$ is a function of real $\boldsymbol{z}$ (i.e. of $\boldsymbol{z}_r$ and $\boldsymbol{z}_i$).

Given incidence matrices $\underline{\boldsymbol{C}}$, $\underline{\boldsymbol{D}}$ and $\underline{\boldsymbol{A}}$ used to select the appropriate elements of the complex vectors $\mathbf{v}$, $\mathbf{z}$, and $\mathbf{x}$, respectively, it is straightforward to construct equivalent incidence matrices $\underline{\boldsymbol{C}}'$, $\underline{\boldsymbol{D}}'$, and $\underline{\boldsymbol{A}}'$ for the corresponding real vectors $\boldsymbol{v}$, $\boldsymbol{z}$, and $\boldsymbol{x}$. Because $\underline{\boldsymbol{C}}$ and $\underline{\boldsymbol{D}}$ each have a single non-zero entry in each column, it turns

out that they can be duplicated on the block diagonal of $\underline{\boldsymbol{C}}'$ and $\underline{\boldsymbol{D}}'$, respectively, with $\underline{\boldsymbol{A}}'$ constructed from $\underline{\boldsymbol{C}}'$ and $\underline{\boldsymbol{D}}'$ as expected.

$$\underline{\boldsymbol{C}}' = \begin{bmatrix} \underline{\boldsymbol{C}} & \mathbf{0} \\ \mathbf{0} & \underline{\boldsymbol{C}} \end{bmatrix} \qquad \underline{\boldsymbol{D}}' = \begin{bmatrix} \underline{\boldsymbol{D}} & \mathbf{0} \\ \mathbf{0} & \underline{\boldsymbol{D}} \end{bmatrix} \qquad \underline{\boldsymbol{A}}' = \begin{bmatrix} \underline{\boldsymbol{C}}' & \mathbf{0} \\ \mathbf{0} & \underline{\boldsymbol{D}}' \end{bmatrix} \tag{4.20}$$

Applying the new primed matrices to the real vectors is equivalent to applying the original matrices to the complex vectors. In other words,

$$\underline{\boldsymbol{C}}^{\mathsf{T}}\mathbf{v}(\boldsymbol{v}) = \mathbf{v}(\underline{\boldsymbol{C}}'^{\mathsf{T}}\boldsymbol{v}) \tag{4.21}$$

$$\underline{\boldsymbol{D}}^{\mathsf{T}}\mathbf{z}(\boldsymbol{z}) = \mathbf{z}(\underline{\boldsymbol{D}}'^{\mathsf{T}}\boldsymbol{z}) \tag{4.22}$$

$$\underline{\boldsymbol{A}}^{\mathsf{T}}\mathbf{x}(\boldsymbol{x}) = \mathbf{x}(\underline{\boldsymbol{A}}'^{\mathsf{T}}\boldsymbol{x}). \tag{4.23}$$

This means that, for a given function $\mathbf{g}(\mathbf{x})$ and its corresponding $\mathbf{g}(\boldsymbol{x})$, transforming the complex input $\mathbf{x}$ by $\underline{\boldsymbol{A}}^{\mathsf{T}}$ is equivalent to transforming the real input $\boldsymbol{x}$ by $\underline{\boldsymbol{A}}'^{\mathsf{T}}$. That is, $\mathbf{g}(\underline{\boldsymbol{A}}^{\mathsf{T}}\mathbf{x})$ is equivalent to $\mathbf{g}(\underline{\boldsymbol{A}}'^{\mathsf{T}}\boldsymbol{x})$.

4.3.2 Complex Power Injections

The complex power port injections from (3.8)–(3.10) are expressed for the aggregate model in terms of the system state variables as follows.

$$\begin{aligned}
\mathbf{g}^{S;\mathrm{sys}}(\mathbf{x}) &= \mathbf{g}^{S}(\underline{\boldsymbol{A}}^{\mathsf{T}}\mathbf{x}) && (4.24)\\
&= \mathbf{s}^{l}(\underline{\boldsymbol{A}}^{\mathsf{T}}\mathbf{x}) + \mathbf{s}^{lin}(\underline{\boldsymbol{A}}^{\mathsf{T}}\mathbf{x}) + \mathbf{s}^{nln}(\underline{\boldsymbol{A}}^{\mathsf{T}}\mathbf{x}) && (4.25)\\
&= \left[\underline{\boldsymbol{C}}^{\mathsf{T}}\mathbf{v}\right]\left(\mathbf{i}^{lin}(\underline{\boldsymbol{A}}^{\mathsf{T}}\mathbf{x})\right)^{*} + \mathbf{s}^{lin}(\underline{\boldsymbol{A}}^{\mathsf{T}}\mathbf{x}) + \mathbf{s}^{nln}(\mathbf{x}) && (4.26)\\
&= \left[\underline{\boldsymbol{C}}^{\mathsf{T}}\mathbf{v}\right]\left(\underline{\mathbf{Y}}\underline{\boldsymbol{C}}^{\mathsf{T}}\mathbf{v} + \underline{\mathbf{L}}\underline{\boldsymbol{D}}^{\mathsf{T}}\mathbf{z} + \underline{\mathbf{i}}\right)^{*} + \underline{\mathbf{M}}\underline{\boldsymbol{C}}^{\mathsf{T}}\mathbf{v} + \underline{\mathbf{N}}\underline{\boldsymbol{D}}^{\mathsf{T}}\mathbf{z} + \underline{\mathbf{s}} + \mathbf{s}^{nln}(\underline{\boldsymbol{A}}^{\mathsf{T}}\mathbf{x}) && (4.27)
\end{aligned}$$

The derivatives of this complex power port injection function can be expressed based on (3.11)–(3.12) as follows,

$$\begin{aligned}
\mathbf{g}_{\boldsymbol{x}}^{S;\mathrm{sys}} &= \mathbf{g}_{\boldsymbol{x}}^{S}\underline{\boldsymbol{A}}'^{\mathsf{T}} && (4.28)\\
&= \left(\mathbf{s}_{\boldsymbol{x}}^{l} + \mathbf{s}_{\boldsymbol{x}}^{lin} + \mathbf{s}_{\boldsymbol{x}}^{nln}\right)\underline{\boldsymbol{A}}'^{\mathsf{T}} && (4.29)\\
\mathbf{g}_{\boldsymbol{xx}}^{S;\mathrm{sys}}(\boldsymbol{\lambda}) &= \underline{\boldsymbol{A}}'\mathbf{g}_{\boldsymbol{xx}}^{S}(\boldsymbol{\lambda})\underline{\boldsymbol{A}}'^{\mathsf{T}} && (4.30)\\
&= \underline{\boldsymbol{A}}'\left(\mathbf{s}_{\boldsymbol{xx}}^{l}(\boldsymbol{\lambda}) + \mathbf{s}_{\boldsymbol{xx}}^{lin}(\boldsymbol{\lambda}) + \mathbf{s}_{\boldsymbol{xx}}^{nln}(\boldsymbol{\lambda})\right)\underline{\boldsymbol{A}}'^{\mathsf{T}} && (4.31)
\end{aligned}$$

where the derivatives of $\mathbf{s}^{lin}$ and $\mathbf{s}^{l}$ are derived in Sections 7 and 8, respectively, and the derivatives of $\mathbf{s}^{nln}$ are assumed to be provided explicitly.

4.3.3 Complex Current Injections

Likewise, the complex current port injections from (3.14)–(3.16) are expressed for the aggregate model in terms of the system state variables as follows.

$$\begin{aligned}
\mathbf{g}^{I;\text{sys}}(\mathbf{x}) &= \mathbf{g}^{I}(\underline{\boldsymbol{A}}^{\mathsf{T}}\mathbf{x}) && (4.32)\\
&= \mathbf{i}^{lin}(\underline{\boldsymbol{A}}^{\mathsf{T}}\mathbf{x}) + \mathbf{i}^{S}(\underline{\boldsymbol{A}}^{\mathsf{T}}\mathbf{x}) + \mathbf{i}^{nln}(\underline{\boldsymbol{A}}^{\mathsf{T}}\mathbf{x}) && (4.33)\\
&= \mathbf{i}^{lin}(\underline{\boldsymbol{A}}^{\mathsf{T}}\mathbf{x}) + \left[\mathbf{s}^{lin}(\underline{\boldsymbol{A}}^{\mathsf{T}}\mathbf{x})\right]^{*}\underline{\boldsymbol{C}}^{\mathsf{T}}\boldsymbol{\Lambda}^{*} + \mathbf{i}^{nln}(\underline{\boldsymbol{A}}^{\mathsf{T}}\mathbf{x}) && (4.34)\\
&= \underline{\mathbf{Y}\boldsymbol{C}}^{\mathsf{T}}\mathbf{v} + \underline{\mathbf{L}\boldsymbol{D}}^{\mathsf{T}}\mathbf{z} + \underline{\mathbf{i}} + \left[\underline{\mathbf{M}\boldsymbol{C}}^{\mathsf{T}}\mathbf{v} + \underline{\mathbf{N}\boldsymbol{D}}^{\mathsf{T}}\mathbf{z} + \underline{\mathbf{s}}\right]^{*}\underline{\boldsymbol{C}}^{\mathsf{T}}\boldsymbol{\Lambda}^{*} + \mathbf{i}^{nln}(\underline{\boldsymbol{A}}^{\mathsf{T}}\mathbf{x}) && (4.35)
\end{aligned}$$

The derivatives of this complex current port injection function can be expressed based on (3.17)–(3.18) as follows,

$$\begin{aligned}
\mathbf{g}_{\boldsymbol{x}}^{I;\text{sys}} &= \mathbf{g}_{\boldsymbol{x}}^{I}\underline{\boldsymbol{A}}'^{\mathsf{T}} && (4.36)\\
&= \left(\mathbf{i}_{\boldsymbol{x}}^{lin} + \mathbf{i}_{\boldsymbol{x}}^{S} + \mathbf{i}_{\boldsymbol{x}}^{nln}\right)\underline{\boldsymbol{A}}'^{\mathsf{T}} && (4.37)\\
\mathbf{g}_{\boldsymbol{xx}}^{I;\text{sys}}(\boldsymbol{\lambda}) &= \underline{\boldsymbol{A}}'\mathbf{g}_{\boldsymbol{xx}}^{I}(\boldsymbol{\lambda})\underline{\boldsymbol{A}}'^{\mathsf{T}} && (4.38)\\
&= \underline{\boldsymbol{A}}'\left(\mathbf{i}_{\boldsymbol{xx}}^{lin}(\boldsymbol{\lambda}) + \mathbf{i}_{\boldsymbol{xx}}^{S}(\boldsymbol{\lambda}) + \mathbf{i}_{\boldsymbol{xx}}^{nln}(\boldsymbol{\lambda})\right)\underline{\boldsymbol{A}}'^{\mathsf{T}} && (4.39)
\end{aligned}$$

where the derivatives of $\mathbf{i}^{lin}$ and $\mathbf{i}^{S}$ are derived in Sections 6 and 9, respectively, and the derivatives of $\mathbf{i}^{nln}$ are assumed to be provided explicitly.

4.4 DC Model

4.4.1 Active Power Injections

The active power port injections from (3.20)–(3.21) are expressed for the aggregate model in terms of the system state variables as follows.

$$\begin{aligned}
\boldsymbol{g}^{P;\text{sys}}(\boldsymbol{x}) &= \boldsymbol{g}^{P}(\underline{\boldsymbol{A}}^{\mathsf{T}}\boldsymbol{x}) && (4.40)\\
&= \underline{\boldsymbol{B}\boldsymbol{C}}^{\mathsf{T}}\boldsymbol{\theta} + \underline{\boldsymbol{K}\boldsymbol{D}}^{\mathsf{T}}\boldsymbol{z} + \underline{\boldsymbol{p}} && (4.41)
\end{aligned}$$

The derivatives of this active power port injection function can be expressed based on (3.22) as follows.

$$\begin{aligned}
\boldsymbol{g}_{\boldsymbol{x}}^{P;\text{sys}} &= \boldsymbol{g}_{\boldsymbol{x}}^{P}\underline{\boldsymbol{A}}^{\mathsf{T}} && (4.42)\\
&= \begin{bmatrix} \underline{\boldsymbol{B}\boldsymbol{C}}^{\mathsf{T}} & \underline{\boldsymbol{K}\boldsymbol{D}}^{\mathsf{T}} \end{bmatrix} && (4.43)
\end{aligned}$$

5 Complex Voltages and Derivatives

Each complex voltage v_i can be expressed in polar form as $\mathrm{v}_i = \nu_i e^{j\ i}$ or in cartesian form as $\mathrm{v}_i = u_i + jw_i$. A vector of such voltages (node voltages, port voltages, etc.) is denoted $\mathbf{v}$, where the real vectors $\boldsymbol{\nu}$ and $\boldsymbol{\theta}$ are the voltage magnitudes and angles, and $\boldsymbol{u}$ and $\boldsymbol{w}$ are the real and imaginary parts of $\mathbf{v}$, respectively.

Consider also the vector of inverses of bus voltages $\frac{1}{\mathrm{v}_i}$, denoted by $\boldsymbol{\Lambda}$. Note that

$$\frac{1}{\mathrm{v}_i} = \frac{1}{u_i + jw_i} = \frac{u_i - jw_i}{u_i^2 + w_i^2} = \frac{\mathrm{v}_i{}^*}{\nu_i^2} \tag{5.1}$$

$$\boldsymbol{\Lambda} = \mathbf{v}^{-1} = [\boldsymbol{\nu}]^{-2}\,\mathbf{v}^* \tag{5.2}$$

$$\boldsymbol{\theta} = \tan^{-1}\left([\boldsymbol{u}]^{-1}\,\boldsymbol{w}\right) \tag{5.3}$$

$$\boldsymbol{\nu} = \left(\boldsymbol{u}^2 + \boldsymbol{w}^2\right)^{\frac{1}{2}} \tag{5.4}$$

We will also define $\mathbf{e}$ as

$$\mathbf{e} = [\boldsymbol{\nu}]^{-1}\,\mathbf{v} = e^{j\boldsymbol{\theta}} \tag{5.5}$$

which means that

$$\mathbf{v} = [\boldsymbol{\nu}]\,\mathbf{e}. \tag{5.6}$$

Any of the variables $\mathbf{v}$, $\boldsymbol{\Lambda}$, $\boldsymbol{\nu}$, $\boldsymbol{\theta}$, $\boldsymbol{u}$, $\boldsymbol{w}$, and $\mathbf{e}$ can be multiplied by the matrix $\boldsymbol{J}$

5.2 Polar Coordinates

5.2.1 First Derivatives

$$\hat{\mathbf{v}}_{\boldsymbol{\theta}} = \frac{\partial \hat{\mathbf{v}}}{\partial \boldsymbol{\theta}} = j\,[\hat{\mathbf{v}}]\,\underline{\boldsymbol{J}} \tag{5.9}$$

$$\hat{\mathbf{v}}_{\boldsymbol{\nu}} = \frac{\partial \hat{\mathbf{v}}}{\partial \boldsymbol{\nu}} = [\hat{\boldsymbol{\nu}}]^{-1}\,[\hat{\mathbf{v}}]\,\underline{\boldsymbol{J}} = [\hat{\mathbf{e}}]\,\underline{\boldsymbol{J}} \tag{5.10}$$

$$\hat{\boldsymbol{\Lambda}}_{\boldsymbol{\theta}} = \frac{\partial \hat{\boldsymbol{\Lambda}}}{\partial \boldsymbol{\theta}} = -\,[\hat{\mathbf{v}}]^{-2}\,\hat{\mathbf{v}}_{\boldsymbol{\theta}} = -j\,[\hat{\mathbf{v}}]^{-1}\,\underline{\boldsymbol{J}} = -j\,[\hat{\boldsymbol{\Lambda}}]\,\underline{\boldsymbol{J}} \tag{5.11}$$

$$\hat{\boldsymbol{\Lambda}}_{\boldsymbol{\nu}} = \frac{\partial \hat{\boldsymbol{\Lambda}}}{\partial \boldsymbol{\nu}} = -\,[\hat{\mathbf{v}}]^{-2}\,\hat{\mathbf{v}}_{\boldsymbol{\nu}} = -\,[\hat{\mathbf{v}}]^{-1}\,[\hat{\boldsymbol{\nu}}]^{-1}\,\underline{\boldsymbol{J}} = -\,[\hat{\boldsymbol{\nu}}]^{-1}\,[\hat{\boldsymbol{\Lambda}}]\,\underline{\boldsymbol{J}} \tag{5.12}$$

$$\hat{\mathbf{e}}_{\boldsymbol{\theta}} = \frac{\partial \hat{\mathbf{e}}}{\partial \boldsymbol{\theta}} = j\,[\hat{\mathbf{e}}]\,\underline{\boldsymbol{J}} \tag{5.13}$$

$$\hat{\mathbf{e}}_{\boldsymbol{\nu}} = \frac{\partial \hat{\mathbf{e}}}{\partial \boldsymbol{\nu}} = \mathbf{0} \tag{5.14}$$

5.2.2 Second Derivatives

It may be useful in later derivations to note that

$$\hat{\mathbf{v}}_{\boldsymbol{\nu}\boldsymbol{\nu}}(\hat{\boldsymbol{\lambda}}) = \frac{\partial}{\partial \boldsymbol{\nu}}\left(\frac{\partial \hat{\mathbf{v}}}{\partial \boldsymbol{\nu}}^{\mathsf{T}}\,\hat{\boldsymbol{\lambda}}\right) = \underline{\boldsymbol{J}}^{\mathsf{T}}\,[\hat{\boldsymbol{\lambda}}]\,\hat{\mathbf{e}}_{\boldsymbol{\nu}} = \mathbf{0} \tag{5.15}$$

5.3 Cartesian Coordinates

5.3.1 First Derivatives

$$\hat{\mathbf{v}}_{\boldsymbol{u}} = \frac{\partial \hat{\mathbf{v}}}{\partial \boldsymbol{u}} = \underline{\boldsymbol{J}} \tag{5.16}$$

$$\hat{\mathbf{v}}_{\boldsymbol{w}} = \frac{\partial \hat{\mathbf{v}}}{\partial \boldsymbol{w}} = j\underline{\boldsymbol{J}} \tag{5.17}$$

$$\hat{\boldsymbol{\Lambda}}_{\boldsymbol{u}} = \frac{\partial \hat{\boldsymbol{\Lambda}}}{\partial \boldsymbol{u}} = -\left[\hat{\boldsymbol{\Lambda}}\right]^2 \underline{\boldsymbol{J}} \tag{5.18}$$

$$\hat{\boldsymbol{\Lambda}}_{\boldsymbol{w}} = \frac{\partial \hat{\boldsymbol{\Lambda}}}{\partial \boldsymbol{w}} = -j\left[\hat{\boldsymbol{\Lambda}}\right]^2 \underline{\boldsymbol{J}} \tag{5.19}$$

$$\hat{\boldsymbol{\theta}}_{\boldsymbol{u}} = \frac{\partial \hat{\boldsymbol{\theta}}}{\partial \boldsymbol{u}} = -\left[\hat{\boldsymbol{\nu}}\right]^{-2}\left[\hat{\boldsymbol{w}}\right] \underline{\boldsymbol{J}} \tag{5.20}$$

$$\hat{\boldsymbol{\theta}}_{\boldsymbol{w}} = \frac{\partial \hat{\boldsymbol{\theta}}}{\partial \boldsymbol{w}} = \left[\hat{\boldsymbol{\nu}}\right]^{-2}\left[\hat{\boldsymbol{u}}\right] \underline{\boldsymbol{J}} \tag{5.21}$$

$$\hat{\boldsymbol{\nu}}_{\boldsymbol{u}} = \frac{\partial \hat{\boldsymbol{\nu}}}{\partial \boldsymbol{u}} = \left[\hat{\boldsymbol{\nu}}\right]^{-1}\left[\hat{\boldsymbol{u}}\right] \underline{\boldsymbol{J}} \tag{5.22}$$

$$\hat{\boldsymbol{\nu}}_{\boldsymbol{w}} = \frac{\partial \hat{\boldsymbol{\nu}}}{\partial \boldsymbol{w}} = \left[\hat{\boldsymbol{\nu}}\right]^{-1}\left[\hat{\boldsymbol{w}}\right] \underline{\boldsymbol{J}} \tag{5.23}$$

5.3.2 Second Derivatives

$$\hat{\boldsymbol{\theta}}_{\boldsymbol{uu}}(\hat{\boldsymbol{\lambda}}) = \frac{\partial}{\partial \boldsymbol{u}} \left(\hat{\boldsymbol{\theta}}_{\boldsymbol{u}}{}^{\mathsf{T}} \hat{\boldsymbol{\lambda}} \right) \tag{5.24}$$

$$= 2\underline{\boldsymbol{J}}^{\mathsf{T}} \left[\hat{\boldsymbol{\lambda}}\right] \left[\hat{\boldsymbol{\nu}}\right]^{-4} \left[\hat{\boldsymbol{u}}\right] \left[\hat{\boldsymbol{w}}\right] \underline{\boldsymbol{J}} \tag{5.25}$$

$$\hat{\boldsymbol{\theta}}_{\boldsymbol{uw}}(\hat{\boldsymbol{\lambda}}) = \frac{\partial}{\partial \boldsymbol{w}} \left(\hat{\boldsymbol{\theta}}_{\boldsymbol{u}}{}^{\mathsf{T}} \hat{\boldsymbol{\lambda}} \right) \tag{5.26}$$

$$= \underline{\boldsymbol{J}}^{\mathsf{T}} \left[\hat{\boldsymbol{\lambda}}\right] \left[\hat{\boldsymbol{\nu}}\right]^{-4} \left(\left[\hat{\boldsymbol{w}}\right]^2 - \left[\hat{\boldsymbol{u}}\right]^2 \right) \underline{\boldsymbol{J}} \tag{5.27}$$

$$\hat{\boldsymbol{\theta}}_{\boldsymbol{wu}}(\hat{\boldsymbol{\lambda}}) = \frac{\partial}{\partial \boldsymbol{u}} \left(\hat{\boldsymbol{\theta}}_{\boldsymbol{w}}{}^{\mathsf{T}} \hat{\boldsymbol{\lambda}} \right) \tag{5.28}$$

$$= \underline{\boldsymbol{J}}^{\mathsf{T}} \left[\hat{\boldsymbol{\lambda}}\right] \left[\hat{\boldsymbol{\nu}}\right]^{-4} \left(\left[\hat{\boldsymbol{w}}\right]^2 - \left[\hat{\boldsymbol{u}}\right]^2 \right) \underline{\boldsymbol{J}} \tag{5.29}$$

$$\hat{\boldsymbol{\theta}}_{\boldsymbol{ww}}(\hat{\boldsymbol{\lambda}}) = \frac{\partial}{\partial \boldsymbol{w}} \left(\hat{\boldsymbol{\theta}}_{\boldsymbol{w}}{}^{\mathsf{T}} \hat{\boldsymbol{\lambda}} \right) \tag{5.30}$$

$$= -2\underline{\boldsymbol{J}}^{\mathsf{T}} \left[\hat{\boldsymbol{\lambda}}\right] \left[\hat{\boldsymbol{\nu}}\right]^{-4} \left[\hat{\boldsymbol{u}}\right] \left[\hat{\boldsymbol{w}}\right] \underline{\boldsymbol{J}} \tag{5.31}$$

$$\hat{\boldsymbol{\nu}}_{\boldsymbol{uu}}(\hat{\boldsymbol{\lambda}}) = \frac{\partial}{\partial \boldsymbol{u}} \left(\hat{\boldsymbol{\nu}}_{\boldsymbol{u}}{}^{\mathsf{T}} \hat{\boldsymbol{\lambda}} \right) \tag{5.32}$$

$$= \underline{\boldsymbol{J}}^{\mathsf{T}} \left[\hat{\boldsymbol{\lambda}}\right] \left[\hat{\boldsymbol{\nu}}\right]^{-3} \left[\hat{\boldsymbol{w}}\right]^2 \underline{\boldsymbol{J}} \tag{5.33}$$

$$\hat{\boldsymbol{\nu}}_{\boldsymbol{uw}}(\hat{\boldsymbol{\lambda}}) = \frac{\partial}{\partial \boldsymbol{w}} \left(\hat{\boldsymbol{\nu}}_{\boldsymbol{u}}{}^{\mathsf{T}} \hat{\boldsymbol{\lambda}} \right) \tag{5.34}$$

$$= -\underline{\boldsymbol{J}}^{\mathsf{T}} \left[\hat{\boldsymbol{\lambda}}\right] \left[\hat{\boldsymbol{\nu}}\right]^{-3} \left[\hat{\boldsymbol{u}}\right] \left[\hat{\boldsymbol{w}}\right] \underline{\boldsymbol{J}} \tag{5.35}$$

$$\hat{\boldsymbol{\nu}}_{\boldsymbol{wu}}(\hat{\boldsymbol{\lambda}}) = \frac{\partial}{\partial \boldsymbol{u}} \left(\hat{\boldsymbol{\nu}}_{\boldsymbol{w}}{}^{\mathsf{T}} \hat{\boldsymbol{\lambda}} \right) \tag{5.36}$$

$$= -\underline{\boldsymbol{J}}^{\mathsf{T}} \left[\hat{\boldsymbol{\lambda}}\right] \left[\hat{\boldsymbol{\nu}}\right]^{-3} \left[\hat{\boldsymbol{u}}\right] \left[\hat{\boldsymbol{w}}\right] \underline{\boldsymbol{J}} \tag{5.37}$$

$$\hat{\boldsymbol{\nu}}_{\boldsymbol{ww}}(\hat{\boldsymbol{\lambda}}) = \frac{\partial}{\partial \boldsymbol{w}} \left(\hat{\boldsymbol{\nu}}_{\boldsymbol{w}}{}^{\mathsf{T}} \hat{\boldsymbol{\lambda}} \right) \tag{5.38}$$

$$= \underline{\boldsymbol{J}}^{\mathsf{T}} \left[\hat{\boldsymbol{\lambda}}\right] \left[\hat{\boldsymbol{\nu}}\right]^{-3} \left[\hat{\boldsymbol{u}}\right]^2 \underline{\boldsymbol{J}} \tag{5.39}$$

6 Linear Current Injections

The linear current injection term $\mathbf{i}^{lin}$ from (3.3), namely,

$$\hat{\mathbf{i}}^{lin}(\mathbf{x}) = \underline{\hat{\mathbf{Y}}}\mathbf{v} + \underline{\hat{\mathbf{L}}}\mathbf{z} + \underline{\hat{\mathbf{i}}}, \tag{6.1}$$

has the following derivatives.

6.1 Complex

6.1.1 First Derivatives

$$\hat{\mathbf{i}}^{lin}_{\mathbf{x}} = \frac{\partial \hat{\mathbf{i}}^{lin}}{\partial \mathbf{x}} = \begin{bmatrix} \frac{@\hat{\mathbf{i}}^{lin}}{@\mathbf{v}} & \frac{@\hat{\mathbf{i}}^{lin}}{@\mathbf{z}} \end{bmatrix} \tag{6.2}$$

$$\hat{\mathbf{i}}^{lin}_{\mathbf{v}} = \frac{\partial \hat{\mathbf{i}}^{lin}}{\partial \mathbf{v}} = \underline{\hat{\mathbf{Y}}} \tag{6.3}$$

$$\hat{\mathbf{i}}^{lin}_{\mathbf{z}} = \frac{\partial \hat{\mathbf{i}}^{lin}}{\partial \mathbf{z}} = \underline{\hat{\mathbf{L}}} \tag{6.4}$$

6.2 Polar

6.2.1 First Derivatives

$$\hat{\mathbf{i}}^{lin}_{\mathbf{x}} = \frac{\partial \hat{\mathbf{i}}^{lin}}{\partial \mathbf{x}} = \begin{bmatrix} \frac{@\hat{\mathbf{i}}^{lin}}{@\boldsymbol{\theta}} & \frac{@\hat{\mathbf{i}}^{lin}}{@\boldsymbol{\nu}} & \frac{@\hat{\mathbf{i}}^{lin}}{@\boldsymbol{z}_r} & \frac{@\hat{\mathbf{i}}^{lin}}{@\boldsymbol{z}_i} \end{bmatrix} \tag{6.5}$$

$$\hat{\mathbf{i}}^{lin}_{\boldsymbol{\theta}} = \frac{\partial \hat{\mathbf{i}}^{lin}}{\partial \boldsymbol{\theta}} = \hat{\mathbf{i}}^{lin}_{\mathbf{v}}\mathbf{v}_{\boldsymbol{\theta}} = j\underline{\hat{\mathbf{Y}}}\,[\mathbf{v}] \tag{6.6}$$

$$\hat{\mathbf{i}}^{lin}_{\boldsymbol{\nu}} = \frac{\partial \hat{\mathbf{i}}^{lin}}{\partial \boldsymbol{\nu}} = \hat{\mathbf{i}}^{lin}_{\mathbf{v}}\mathbf{v}_{\boldsymbol{\nu}} = \underline{\hat{\mathbf{Y}}}\,[\mathbf{e}] \tag{6.7}$$

$$\hat{\mathbf{i}}^{lin}_{\boldsymbol{z}_r} = \frac{\partial \hat{\mathbf{i}}^{lin}}{\partial \boldsymbol{z}_r} = \hat{\mathbf{i}}^{lin}_{\mathbf{z}}\mathbf{z}_{\boldsymbol{z}_r} = \underline{\hat{\mathbf{L}}} \tag{6.8}$$

$$\hat{\mathbf{i}}^{lin}_{\boldsymbol{z}_i} = \frac{\partial \hat{\mathbf{i}}^{lin}}{\partial \boldsymbol{z}_i} = \hat{\mathbf{i}}^{lin}_{\mathbf{z}}\mathbf{z}_{\boldsymbol{z}_i} = j\underline{\hat{\mathbf{L}}} \tag{6.9}$$

6.2.2 Second Derivatives

Since $\mathbf{i}_{\mathbf{z}}^{lin}$ is constant, all second derivatives involving $\boldsymbol{z}_r$ and $\boldsymbol{z}_i$ are zero. Similarly, $\mathbf{i}_{\boldsymbol{\nu\nu}}^{lin}(\boldsymbol{\lambda})$ is zero and the other three are diagonal matrices.

$$\hat{\mathbf{i}}_{\boldsymbol{xx}}^{lin}(\hat{\boldsymbol{\lambda}}) = \frac{\partial}{\partial \boldsymbol{x}} \left(\hat{\mathbf{i}}_{\boldsymbol{x}}^{lin\,\mathsf{T}} \hat{\boldsymbol{\lambda}} \right) \tag{6.10}$$

$$= \begin{bmatrix} \hat{\mathbf{i}}_{\boldsymbol{\theta\theta}}^{lin}(\hat{\boldsymbol{\lambda}}) & \hat{\mathbf{i}}_{\boldsymbol{\theta\nu}}^{lin}(\hat{\boldsymbol{\lambda}}) & \mathbf{0} & \mathbf{0} \\ \hat{\mathbf{i}}_{\boldsymbol{\nu\theta}}^{lin}(\hat{\boldsymbol{\lambda}}) & \mathbf{0} & \mathbf{0} & \mathbf{0} \\ \mathbf{0} & \mathbf{0} & \mathbf{0} & \mathbf{0} \\ \mathbf{0} & \mathbf{0} & \mathbf{0} & \mathbf{0} \end{bmatrix} \tag{6.11}$$

$$\hat{\mathbf{i}}_{\boldsymbol{\theta\theta}}^{lin}(\hat{\boldsymbol{\lambda}}) = \frac{\partial}{\partial \boldsymbol{\theta}} \left(\hat{\mathbf{i}}_{\boldsymbol{\theta}}^{lin\,\mathsf{T}} \hat{\boldsymbol{\lambda}} \right) \tag{6.12}$$

$$= \frac{\partial}{\partial \boldsymbol{\theta}} \left(j\,[\mathbf{v}]\,\underline{\hat{\mathbf{Y}}}^{\mathsf{T}} \hat{\boldsymbol{\lambda}} \right) \tag{6.13}$$

$$= j \left[\underline{\hat{\mathbf{Y}}}^{\mathsf{T}} \hat{\boldsymbol{\lambda}} \right] \mathbf{v}_{\boldsymbol{\theta}} \tag{6.14}$$

$$= - \left[\underline{\hat{\mathbf{Y}}}^{\mathsf{T}} \hat{\boldsymbol{\lambda}} \right] [\mathbf{v}] \tag{6.15}$$

$$\hat{\mathbf{i}}_{\boldsymbol{\nu\theta}}^{lin}(\hat{\boldsymbol{\lambda}}) = \frac{\partial}{\partial \boldsymbol{\theta}} \left(\hat{\mathbf{i}}_{\boldsymbol{\nu}}^{lin\,\mathsf{T}} \hat{\boldsymbol{\lambda}} \right) \tag{6.16}$$

$$= \frac{\partial}{\partial \boldsymbol{\theta}} \left([\mathbf{e}]\,\underline{\hat{\mathbf{Y}}}^{\mathsf{T}} \hat{\boldsymbol{\lambda}} \right) \tag{6.17}$$

$$= \left[\underline{\hat{\mathbf{Y}}}^{\mathsf{T}} \hat{\boldsymbol{\lambda}} \right] \mathbf{e}_{\boldsymbol{\theta}} \tag{6.18}$$

$$= j \left[\underline{\hat{\mathbf{Y}}}^{\mathsf{T}} \hat{\boldsymbol{\lambda}} \right] [\mathbf{e}] \tag{6.19}$$

$$\hat{\mathbf{i}}_{\boldsymbol{\theta\nu}}^{lin}(\hat{\boldsymbol{\lambda}}) = \frac{\partial}{\partial \boldsymbol{\nu}} \left(\hat{\mathbf{i}}_{\boldsymbol{\theta}}^{lin\,\mathsf{T}} \hat{\boldsymbol{\lambda}} \right) \tag{6.20}$$

$$= \frac{\partial}{\partial \boldsymbol{\nu}} \left(j\,[\mathbf{v}]\,\underline{\hat{\mathbf{Y}}}^{\mathsf{T}} \hat{\boldsymbol{\lambda}} \right) \tag{6.21}$$

$$= j \left[\underline{\hat{\mathbf{Y}}}^{\mathsf{T}} \hat{\boldsymbol{\lambda}} \right] \mathbf{v}_{\boldsymbol{\theta}} \tag{6.22}$$

$$= j \left[\underline{\hat{\mathbf{Y}}}^{\mathsf{T}} \hat{\boldsymbol{\lambda}} \right] [\mathbf{e}] \tag{6.23}$$

$$= \hat{\mathbf{i}}_{\boldsymbol{\nu\theta}}^{lin}(\hat{\boldsymbol{\lambda}}) \tag{6.24}$$

$$\hat{\mathbf{i}}^{lin}_{\boldsymbol{\nu\nu}}(\hat{\boldsymbol{\lambda}}) = \frac{\partial}{\partial \boldsymbol{\nu}} \left(\hat{\mathbf{i}}^{lin\,\mathsf{T}}_{\boldsymbol{\nu}} \hat{\boldsymbol{\lambda}} \right) \tag{6.25}$$

$$= \frac{\partial}{\partial \boldsymbol{\nu}} \left([\mathbf{e}]\, \underline{\hat{\mathbf{Y}}}^{\mathsf{T}} \hat{\boldsymbol{\lambda}} \right) \tag{6.26}$$

$$= \left[\underline{\hat{\mathbf{Y}}}^{\mathsf{T}} \hat{\boldsymbol{\lambda}} \right] \mathbf{e}_{\boldsymbol{\nu}} \tag{6.27}$$

$$= \mathbf{0} \tag{6.28}$$

$$\hat{\mathbf{i}}^{lin}_{\boldsymbol{\theta z}_r}(\hat{\boldsymbol{\lambda}}) = \hat{\mathbf{i}}^{lin}_{\boldsymbol{z}_r\boldsymbol{\theta}}(\hat{\boldsymbol{\lambda}})^{\mathsf{T}} = \hat{\mathbf{i}}^{lin}_{\boldsymbol{\theta z}_i}(\hat{\boldsymbol{\lambda}}) = \hat{\mathbf{i}}^{lin}_{\boldsymbol{z}_i\boldsymbol{\theta}}(\hat{\boldsymbol{\lambda}})^{\mathsf{T}} = \mathbf{0} \tag{6.29}$$

$$\hat{\mathbf{i}}^{lin}_{\boldsymbol{\nu z}_r}(\hat{\boldsymbol{\lambda}}) = \hat{\mathbf{i}}^{lin}_{\boldsymbol{z}_r\boldsymbol{\nu}}(\hat{\boldsymbol{\lambda}})^{\mathsf{T}} = \hat{\mathbf{i}}^{lin}_{\boldsymbol{\nu z}_i}(\hat{\boldsymbol{\lambda}}) = \hat{\mathbf{i}}^{lin}_{\boldsymbol{z}_i\boldsymbol{\nu}}(\hat{\boldsymbol{\lambda}})^{\mathsf{T}} = \mathbf{0} \tag{6.30}$$

$$\hat{\mathbf{i}}^{lin}_{\boldsymbol{z}_r\boldsymbol{z}_r}(\hat{\boldsymbol{\lambda}}) = \hat{\mathbf{i}}^{lin}_{\boldsymbol{z}_r\boldsymbol{z}_i}(\hat{\boldsymbol{\lambda}}) = \hat{\mathbf{i}}^{lin}_{\boldsymbol{z}_i\boldsymbol{z}_r}(\hat{\boldsymbol{\lambda}}) = \hat{\mathbf{i}}^{lin}_{\boldsymbol{z}_i\boldsymbol{z}_i}(\hat{\boldsymbol{\lambda}}) = \mathbf{0} \tag{6.31}$$

6.3 Cartesian

6.3.1 First Derivatives

$$\hat{\mathbf{i}}^{lin}_{\mathbf{x}} = \frac{\partial \hat{\mathbf{i}}^{lin}}{\partial \mathbf{x}} = \begin{bmatrix} \frac{@\hat{\mathbf{i}}^{lin}}{@\boldsymbol{u}} & \frac{@\hat{\mathbf{i}}^{lin}}{@\boldsymbol{w}} & \frac{@\hat{\mathbf{i}}^{lin}}{@\boldsymbol{z}_r} & \frac{@\hat{\mathbf{i}}^{lin}}{@\boldsymbol{z}_i} \end{bmatrix} \tag{6.32}$$

$$\hat{\mathbf{i}}^{lin}_{\boldsymbol{u}} = \frac{\partial \hat{\mathbf{i}}^{lin}}{\partial \boldsymbol{u}} = \hat{\mathbf{i}}^{lin}_{\mathbf{v}} \mathbf{v}_{\boldsymbol{u}} = \underline{\hat{\mathbf{Y}}} \tag{6.33}$$

$$\hat{\mathbf{i}}^{lin}_{\boldsymbol{w}} = \frac{\partial \hat{\mathbf{i}}^{lin}}{\partial \boldsymbol{w}} = \hat{\mathbf{i}}^{lin}_{\mathbf{v}} \mathbf{v}_{\boldsymbol{w}} = j\underline{\hat{\mathbf{Y}}} \tag{6.34}$$

$$\hat{\mathbf{i}}^{lin}_{\boldsymbol{z}_r} = \frac{\partial \hat{\mathbf{i}}^{lin}}{\partial \boldsymbol{z}_r} = \hat{\mathbf{i}}^{lin}_{\mathbf{z}} \mathbf{z}_{\boldsymbol{z}_r} = \underline{\hat{\mathbf{L}}} \tag{6.35}$$

$$\hat{\mathbf{i}}^{lin}_{\boldsymbol{z}_i} = \frac{\partial \hat{\mathbf{i}}^{lin}}{\partial \boldsymbol{z}_i} = \hat{\mathbf{i}}^{lin}_{\mathbf{z}} \mathbf{z}_{\boldsymbol{z}_i} = j\underline{\hat{\mathbf{L}}} \tag{6.36}$$

6.3.2 Second Derivatives

Since $\mathbf{i}^{lin}$ is linear with respect to $\boldsymbol{u}$, $\boldsymbol{w}$, $\boldsymbol{z}_r$, and $\boldsymbol{z}_i$, all of the corresponding second derivatives are zero.

7 Linear Power Injections

The linear power injection term $\mathbf{s}^{lin}$ from (3.5), namely,

$$\hat{\mathbf{s}}^{lin}(\mathbf{x}) = \underline{\hat{\mathbf{M}}}\mathbf{v} + \underline{\hat{\mathbf{N}}}\mathbf{z} + \underline{\hat{\mathbf{s}}} \tag{7.1}$$

has the following derivatives.

7.1 Complex

7.1.1 First Derivatives

$$\hat{\mathbf{s}}^{lin}_{\mathbf{x}} = \frac{\partial \hat{\mathbf{s}}^{lin}}{\partial \mathbf{x}} = \begin{bmatrix} \frac{@\hat{\mathbf{s}}^{lin}}{@\mathbf{v}} & \frac{@\hat{\mathbf{s}}^{lin}}{@\mathbf{z}} \end{bmatrix} \tag{7.2}$$

$$\hat{\mathbf{s}}^{lin}_{\mathbf{v}} = \frac{\partial \hat{\mathbf{s}}^{lin}}{\partial \mathbf{v}} = \underline{\hat{\mathbf{M}}} \tag{7.3}$$

$$\hat{\mathbf{s}}^{lin}_{\mathbf{z}} = \frac{\partial \hat{\mathbf{s}}^{lin}}{\partial \mathbf{z}} = \underline{\hat{\mathbf{N}}} \tag{7.4}$$

7.2 Polar

7.2.1 First Derivatives

$$\hat{\mathbf{s}}^{lin}_{\mathbf{x}} = \frac{\partial \hat{\mathbf{s}}^{lin}}{\partial \mathbf{x}} = \begin{bmatrix} \frac{@\hat{\mathbf{s}}^{lin}}{@\boldsymbol{\theta}} & \frac{@\hat{\mathbf{s}}^{lin}}{@\boldsymbol{\nu}} & \frac{@\hat{\mathbf{s}}^{lin}}{@\boldsymbol{z}_r} & \frac{@\hat{\mathbf{s}}^{lin}}{@\boldsymbol{z}_i} \end{bmatrix} \tag{7.5}$$

$$\hat{\mathbf{s}}^{lin}_{\boldsymbol{\theta}} = \frac{\partial \hat{\mathbf{s}}^{lin}}{\partial \boldsymbol{\theta}} = \hat{\mathbf{s}}^{lin}_{\mathbf{v}}\mathbf{v}_{\boldsymbol{\theta}} = j\underline{\hat{\mathbf{M}}}\,[\mathbf{v}] \tag{7.6}$$

$$\hat{\mathbf{s}}^{lin}_{\boldsymbol{\nu}} = \frac{\partial \hat{\mathbf{s}}^{lin}}{\partial \boldsymbol{\nu}} = \hat{\mathbf{s}}^{lin}_{\mathbf{v}}\mathbf{v}_{\boldsymbol{\nu}} = \underline{\hat{\mathbf{M}}}\,[\mathbf{e}] \tag{7.7}$$

$$\hat{\mathbf{s}}^{lin}_{\boldsymbol{z}_r} = \frac{\partial \hat{\mathbf{s}}^{lin}}{\partial \boldsymbol{z}_r} = \hat{\mathbf{s}}^{lin}_{\mathbf{z}}\mathbf{z}_{\boldsymbol{z}_r} = \underline{\hat{\mathbf{N}}} \tag{7.8}$$

$$\hat{\mathbf{s}}^{lin}_{\boldsymbol{z}_i} = \frac{\partial \hat{\mathbf{s}}^{lin}}{\partial \boldsymbol{z}_i} = \hat{\mathbf{s}}^{lin}_{\mathbf{z}}\mathbf{z}_{\boldsymbol{z}_i} = j\underline{\hat{\mathbf{N}}} \tag{7.9}$$

7.2.2 Second Derivatives

Since $\mathbf{s}_{\mathbf{z}}^{lin}$ is constant, all second derivatives involving $\boldsymbol{z}_r$ and $\boldsymbol{z}_i$ are zero. Similarly, $\mathbf{s}_{\boldsymbol{\nu\nu}}^{lin}(\boldsymbol{\lambda})$ is zero and the other three are diagonal matrices.

$$\hat{\mathbf{s}}_{\boldsymbol{xx}}^{lin}(\hat{\boldsymbol{\lambda}}) = \frac{\partial}{\partial \boldsymbol{x}} \left(\hat{\mathbf{s}}_{\boldsymbol{x}}^{lin\mathsf{T}} \hat{\boldsymbol{\lambda}} \right) \tag{7.10}$$

$$= \begin{bmatrix} \hat{\mathbf{s}}_{\boldsymbol{\theta\theta}}^{lin}(\hat{\boldsymbol{\lambda}}) & \hat{\mathbf{s}}_{\boldsymbol{\theta\nu}}^{lin}(\hat{\boldsymbol{\lambda}}) & \mathbf{0} & \mathbf{0} \\ \hat{\mathbf{s}}_{\boldsymbol{\nu\theta}}^{lin}(\hat{\boldsymbol{\lambda}}) & \mathbf{0} & \mathbf{0} & \mathbf{0} \\ \mathbf{0} & \mathbf{0} & \mathbf{0} & \mathbf{0} \\ \mathbf{0} & \mathbf{0} & \mathbf{0} & \mathbf{0} \end{bmatrix} \tag{7.11}$$

$$\hat{\mathbf{s}}_{\boldsymbol{\theta\theta}}^{lin}(\hat{\boldsymbol{\lambda}}) = \frac{\partial}{\partial \boldsymbol{\theta}} \left(\hat{\mathbf{s}}_{\boldsymbol{\theta}}^{lin\mathsf{T}} \hat{\boldsymbol{\lambda}} \right) \tag{7.12}$$

$$= \frac{\partial}{\partial \boldsymbol{\theta}} \left(j \left[\mathbf{v} \right] \underline{\hat{\mathbf{M}}}^{\mathsf{T}} \hat{\boldsymbol{\lambda}} \right) \tag{7.13}$$

$$= j \left[\underline{\hat{\mathbf{M}}}^{\mathsf{T}} \hat{\boldsymbol{\lambda}} \right] \mathbf{v}_{\boldsymbol{\theta}} \tag{7.14}$$

$$= - \left[\underline{\hat{\mathbf{M}}}^{\mathsf{T}} \hat{\boldsymbol{\lambda}} \right] \left[\mathbf{v} \right] \tag{7.15}$$

$$\hat{\mathbf{s}}_{\boldsymbol{\nu\theta}}^{lin}(\hat{\boldsymbol{\lambda}}) = \frac{\partial}{\partial \boldsymbol{\theta}} \left(\hat{\mathbf{s}}_{\boldsymbol{\nu}}^{lin\mathsf{T}} \hat{\boldsymbol{\lambda}} \right) \tag{7.16}$$

$$= \frac{\partial}{\partial \boldsymbol{\theta}} \left(\left[\mathbf{e} \right] \underline{\hat{\mathbf{M}}}^{\mathsf{T}} \hat{\boldsymbol{\lambda}} \right) \tag{7.17}$$

$$= \left[\underline{\hat{\mathbf{M}}}^{\mathsf{T}} \hat{\boldsymbol{\lambda}} \right] \mathbf{e}_{\boldsymbol{\theta}} \tag{7.18}$$

$$= j \left[\underline{\hat{\mathbf{M}}}^{\mathsf{T}} \hat{\boldsymbol{\lambda}} \right] \left[\mathbf{e} \right] \tag{7.19}$$

$$\hat{\mathbf{s}}_{\boldsymbol{\theta\nu}}^{lin}(\hat{\boldsymbol{\lambda}}) = \frac{\partial}{\partial \boldsymbol{\nu}} \left(\hat{\mathbf{s}}_{\boldsymbol{\theta}}^{lin\mathsf{T}} \hat{\boldsymbol{\lambda}} \right) \tag{7.20}$$

$$= \frac{\partial}{\partial \boldsymbol{\nu}} \left(j \left[\mathbf{v} \right] \underline{\hat{\mathbf{M}}}^{\mathsf{T}} \hat{\boldsymbol{\lambda}} \right) \tag{7.21}$$

$$= j \left[\underline{\hat{\mathbf{M}}}^{\mathsf{T}} \hat{\boldsymbol{\lambda}} \right] \mathbf{v}_{\boldsymbol{\theta}} \tag{7.22}$$

$$= j \left[\underline{\hat{\mathbf{M}}}^{\mathsf{T}} \hat{\boldsymbol{\lambda}} \right] \left[\mathbf{e} \right] \tag{7.23}$$

$$= \hat{\mathbf{s}}_{\boldsymbol{\nu\theta}}^{lin}(\hat{\boldsymbol{\lambda}}) \tag{7.24}$$

$$\hat{\mathbf{s}}^{lin}_{\boldsymbol{\nu\nu}}(\hat{\boldsymbol{\lambda}}) = \frac{\partial}{\partial \boldsymbol{\nu}} \left(\hat{\mathbf{s}}^{lin\,\mathsf{T}}_{\boldsymbol{\nu}} \hat{\boldsymbol{\lambda}} \right) \tag{7.25}$$

$$= \frac{\partial}{\partial \boldsymbol{\nu}} \left([\mathbf{e}]\, \hat{\underline{\mathbf{M}}}^{\mathsf{T}} \hat{\boldsymbol{\lambda}} \right) \tag{7.26}$$

$$= \left[\hat{\underline{\mathbf{M}}}^{\mathsf{T}} \hat{\boldsymbol{\lambda}} \right] \mathbf{e}_{\boldsymbol{\nu}} \tag{7.27}$$

$$= \mathbf{0} \tag{7.28}$$

$$\hat{\mathbf{s}}^{lin}_{\boldsymbol{\theta z}_r}(\hat{\boldsymbol{\lambda}}) = \hat{\mathbf{s}}^{lin}_{\boldsymbol{z}_r\boldsymbol{\theta}}(\hat{\boldsymbol{\lambda}})^{\mathsf{T}} = \hat{\mathbf{s}}^{lin}_{\boldsymbol{\theta z}_i}(\hat{\boldsymbol{\lambda}}) = \hat{\mathbf{s}}^{lin}_{\boldsymbol{z}_i\boldsymbol{\theta}}(\hat{\boldsymbol{\lambda}})^{\mathsf{T}} = \mathbf{0} \tag{7.29}$$

$$\hat{\mathbf{s}}^{lin}_{\boldsymbol{\nu z}_r}(\hat{\boldsymbol{\lambda}}) = \hat{\mathbf{s}}^{lin}_{\boldsymbol{z}_r\boldsymbol{\nu}}(\hat{\boldsymbol{\lambda}})^{\mathsf{T}} = \hat{\mathbf{s}}^{lin}_{\boldsymbol{\nu z}_i}(\hat{\boldsymbol{\lambda}}) = \hat{\mathbf{s}}^{lin}_{\boldsymbol{z}_i\boldsymbol{\nu}}(\hat{\boldsymbol{\lambda}})^{\mathsf{T}} = \mathbf{0} \tag{7.30}$$

$$\hat{\mathbf{s}}^{lin}_{\boldsymbol{z}_r\boldsymbol{z}_r}(\hat{\boldsymbol{\lambda}}) = \hat{\mathbf{s}}^{lin}_{\boldsymbol{z}_r\boldsymbol{z}_i}(\hat{\boldsymbol{\lambda}}) = \hat{\mathbf{s}}^{lin}_{\boldsymbol{z}_i\boldsymbol{z}_r}(\hat{\boldsymbol{\lambda}}) = \hat{\mathbf{s}}^{lin}_{\boldsymbol{z}_i\boldsymbol{z}_i}(\hat{\boldsymbol{\lambda}}) = \mathbf{0} \tag{7.31}$$

7.3 Cartesian

7.3.1 First Derivatives

$$\hat{\mathbf{s}}^{lin}_{\mathbf{x}} = \frac{\partial \hat{\mathbf{s}}^{lin}}{\partial \mathbf{x}} = \begin{bmatrix} \frac{@\hat{\mathbf{s}}^{lin}}{@\boldsymbol{u}} & \frac{@\hat{\mathbf{s}}^{lin}}{@\boldsymbol{w}} & \frac{@\hat{\mathbf{s}}^{lin}}{@\boldsymbol{z}_r} & \frac{@\hat{\mathbf{s}}^{lin}}{@\boldsymbol{z}_i} \end{bmatrix} \tag{7.32}$$

$$\hat{\mathbf{s}}^{lin}_{\boldsymbol{u}} = \frac{\partial \hat{\mathbf{s}}^{lin}}{\partial \boldsymbol{u}} = \hat{\mathbf{s}}^{lin}_{\mathbf{v}} \mathbf{v}_{\boldsymbol{u}} = \hat{\underline{\mathbf{M}}} \tag{7.33}$$

$$\hat{\mathbf{s}}^{lin}_{\boldsymbol{w}} = \frac{\partial \hat{\mathbf{s}}^{lin}}{\partial \boldsymbol{w}} = \hat{\mathbf{s}}^{lin}_{\mathbf{v}} \mathbf{v}_{\boldsymbol{w}} = j\hat{\underline{\mathbf{M}}} \tag{7.34}$$

$$\hat{\mathbf{s}}^{lin}_{\boldsymbol{z}_r} = \frac{\partial \hat{\mathbf{s}}^{lin}}{\partial \boldsymbol{z}_r} = \hat{\mathbf{s}}^{lin}_{\mathbf{z}} \mathbf{z}_{\boldsymbol{z}_r} = \hat{\underline{\mathbf{N}}} \tag{7.35}$$

$$\hat{\mathbf{s}}^{lin}_{\boldsymbol{z}_i} = \frac{\partial \hat{\mathbf{s}}^{lin}}{\partial \boldsymbol{z}_i} = \hat{\mathbf{s}}^{lin}_{\mathbf{z}} \mathbf{z}_{\boldsymbol{z}_i} = j\hat{\underline{\mathbf{N}}} \tag{7.36}$$

7.3.2 Second Derivatives

Since $\mathbf{s}^{lin}$ is linear with respect to $\boldsymbol{u}$, $\boldsymbol{w}$, $\boldsymbol{z}_r$, and $\boldsymbol{z}_i$, all of the corresponding second derivatives are zero.

8 Complex Power from Linear Current Term

This section considers the derivatives of the complex power injection term $\mathbf{s}^I$ defined in (3.7), namely,

$$\hat{\mathbf{s}}^I(\mathbf{x}) = [\hat{\mathbf{v}}]\left(\hat{\mathbf{i}}^{lin}(\mathbf{x})\right)^* \tag{8.1}$$

$$= [\hat{\mathbf{v}}]\left(\underline{\hat{\mathbf{Y}}}\mathbf{v} + \underline{\hat{\mathbf{L}}}\mathbf{z} + \underline{\hat{\mathbf{i}}}\right)^*. \tag{8.2}$$

8.1 Polar

We define the following terms, both for notational convenience for the derivations and for computational savings during computation of the derivatives.

$$\mathcal{A} = [\hat{\mathbf{v}}]\left[\hat{\mathbf{i}}^{lin*}\right]\underline{\boldsymbol{J}} \tag{8.3}$$

$$\mathcal{B} = [\hat{\mathbf{v}}]\,\underline{\hat{\mathbf{Y}}}^* \tag{8.4}$$

$$\mathcal{C} = \mathcal{B}\,[\mathbf{v}^*] \tag{8.5}$$

$$\mathcal{D} = [\boldsymbol{\nu}]^{-1} \tag{8.6}$$

$$\mathcal{E} = [\hat{\mathbf{v}}]\,\underline{\hat{\mathbf{L}}}^* \tag{8.7}$$

$$\mathcal{F} = \underline{\boldsymbol{J}}^{\mathsf{T}}\,[\hat{\boldsymbol{\lambda}}] \tag{8.8}$$

$$\mathcal{G} = \mathcal{F}\mathcal{C} \tag{8.9}$$

$$\mathcal{H} = [\mathbf{v}^*]\left((\mathcal{F}\mathcal{B})^{\mathsf{T}} - \left[\mathcal{B}^{\mathsf{T}}\hat{\boldsymbol{\lambda}}\right]\right) \tag{8.10}$$

$$\mathcal{K} = \mathcal{G} - \mathcal{F}\mathcal{A} = \mathcal{F}(\mathcal{C} - \mathcal{A}) = j\mathcal{F}\hat{\mathbf{s}}^I_{\boldsymbol{\theta}} \tag{8.11}$$

$$\mathcal{L} = \mathcal{F}\mathcal{E} \tag{8.12}$$

$$\mathcal{M} = \mathcal{D}\mathcal{L} \tag{8.13}$$

8.1.1 First Derivatives

$$\hat{\mathbf{s}}^I_{\boldsymbol{x}} = \frac{\partial \hat{\mathbf{s}}^I}{\partial \boldsymbol{x}} = \begin{bmatrix} \frac{@\hat{\mathbf{s}}^I}{@\boldsymbol{\theta}} & \frac{@\hat{\mathbf{s}}^I}{@\boldsymbol{\nu}} & \frac{@\hat{\mathbf{s}}^I}{@\boldsymbol{z}_r} & \frac{@\hat{\mathbf{s}}^I}{@\boldsymbol{z}_i} \end{bmatrix} \tag{8.14}$$

$$= \begin{bmatrix} j(\mathcal{A} - \mathcal{C}) & (\mathcal{A} + \mathcal{C})\mathcal{D} & \mathcal{E} & -j\mathcal{E} \end{bmatrix} \tag{8.15}$$

$$\hat{\mathbf{s}}^I_{\boldsymbol{\theta}} = \frac{\partial \hat{\mathbf{s}}^I}{\partial \boldsymbol{\theta}} = \left[\hat{\mathbf{i}}^{lin*}\right]\frac{\partial \hat{\mathbf{v}}}{\partial \boldsymbol{\theta}} + [\hat{\mathbf{v}}]\,\frac{\partial \hat{\mathbf{i}}^{lin*}}{\partial \boldsymbol{\theta}} \tag{8.16}$$

$$= \left[\hat{\mathbf{i}}^{lin^*}\right] (j\,[\hat{\mathbf{v}}]\,\underline{\boldsymbol{J}}) + [\hat{\mathbf{v}}]\,(j\underline{\hat{\mathbf{Y}}}\,[\mathbf{v}])^* \tag{8.17}$$

$$= j(\left[\hat{\mathbf{i}}^{lin^*}\right] [\hat{\mathbf{v}}]\,\underline{\boldsymbol{J}} - [\hat{\mathbf{v}}]\,\underline{\hat{\mathbf{Y}}}^*\,[\mathbf{v}^*]) \tag{8.18}$$

$$= j(\mathcal{A} - \mathcal{C}) \tag{8.19}$$

$$\hat{\mathbf{s}}^l_{\boldsymbol{\nu}} = \frac{\partial \hat{\mathbf{s}}^l}{\partial \boldsymbol{\nu}} = \left[\hat{\mathbf{i}}^{lin^*}\right] \frac{\partial \hat{\mathbf{v}}}{\partial \boldsymbol{\nu}} + [\hat{\mathbf{v}}]\,\frac{\partial \hat{\mathbf{i}}^{lin^*}}{\partial \boldsymbol{\nu}} \tag{8.20}$$

$$= \left[\hat{\mathbf{i}}^{lin^*}\right] [\hat{\mathbf{e}}]\,\underline{\boldsymbol{J}} + [\hat{\mathbf{v}}]\,\underline{\hat{\mathbf{Y}}}^*\,[\mathbf{e}^*] \tag{8.21}$$

$$= (\left[\hat{\mathbf{i}}^{lin^*}\right] [\hat{\mathbf{v}}]\,\underline{\boldsymbol{J}} + [\hat{\mathbf{v}}]\,\underline{\hat{\mathbf{Y}}}^*\,[\mathbf{v}^*])\,[\boldsymbol{\nu}]^{-1} \tag{8.22}$$

$$= (\mathcal{A} + \mathcal{C})\mathcal{D} \tag{8.23}$$

$$\hat{\mathbf{s}}^l_{\boldsymbol{z}_r} = \frac{\partial \hat{\mathbf{s}}^l}{\partial \boldsymbol{z}_r} = [\hat{\mathbf{v}}]\,\hat{\mathbf{i}}^{lin^*}_{\boldsymbol{z}_r} + \left[\hat{\mathbf{i}}^{lin^*}\right] \hat{\mathbf{v}}_{\boldsymbol{z}_r} \tag{8.24}$$

$$= [\hat{\mathbf{v}}]\,\underline{\hat{\mathbf{L}}}^* \tag{8.25}$$

$$= \mathcal{E} \tag{8.26}$$

$$\hat{\mathbf{s}}^l_{\boldsymbol{z}_i} = \frac{\partial \hat{\mathbf{s}}^l}{\partial \boldsymbol{z}_i} = -j\hat{\mathbf{s}}^l_{\boldsymbol{z}_r} = -j\,[\hat{\mathbf{v}}]\,\underline{\hat{\mathbf{L}}}^* = -j\mathcal{E} \tag{8.27}$$

8.1.2 Second Derivatives

Since $\mathbf{s}^l_{\boldsymbol{z}_r}$ and $\mathbf{s}^l_{\boldsymbol{z}_i}$ are constant with respect to $\boldsymbol{z}_r$ and $\boldsymbol{z}_i$, all second derivatives involving only $\boldsymbol{z}_r$ and $\boldsymbol{z}_i$ are zero.

$$\hat{\mathbf{s}}^l_{\boldsymbol{xx}}(\hat{\boldsymbol{\lambda}}) = \frac{\partial}{\partial \boldsymbol{x}} \left(\hat{\mathbf{s}}^{l\,\mathsf{T}}_{\boldsymbol{x}} \hat{\boldsymbol{\lambda}}\right) \tag{8.28}$$

$$= \begin{bmatrix} \hat{\mathbf{s}}^l_{\boldsymbol{\theta\theta}}(\hat{\boldsymbol{\lambda}}) & \hat{\mathbf{s}}^l_{\boldsymbol{\theta\nu}}(\hat{\boldsymbol{\lambda}}) & \hat{\mathbf{s}}^l_{\boldsymbol{\theta z}_r}(\hat{\boldsymbol{\lambda}}) & \hat{\mathbf{s}}^l_{\boldsymbol{\theta z}_i}(\hat{\boldsymbol{\lambda}}) \\ \hat{\mathbf{s}}^l_{\boldsymbol{\nu\theta}}(\hat{\boldsymbol{\lambda}}) & \hat{\mathbf{s}}^l_{\boldsymbol{\nu\nu}}(\hat{\boldsymbol{\lambda}}) & \hat{\mathbf{s}}^l_{\boldsymbol{\nu z}_r}(\hat{\boldsymbol{\lambda}}) & \hat{\mathbf{s}}^l_{\boldsymbol{\nu z}_i}(\hat{\boldsymbol{\lambda}}) \\ \hat{\mathbf{s}}^l_{\boldsymbol{z}_r\boldsymbol{\theta}}(\hat{\boldsymbol{\lambda}}) & \hat{\mathbf{s}}^l_{\boldsymbol{z}_r\boldsymbol{\nu}}(\hat{\boldsymbol{\lambda}}) & \mathbf{0} & \mathbf{0} \\ \hat{\mathbf{s}}^l_{\boldsymbol{z}_i\boldsymbol{\theta}}(\hat{\boldsymbol{\lambda}}) & \hat{\mathbf{s}}^l_{\boldsymbol{z}_i\boldsymbol{\nu}}(\hat{\boldsymbol{\lambda}}) & \mathbf{0} & \mathbf{0} \end{bmatrix} \tag{8.29}$$

$$= \begin{bmatrix} \mathcal{H} + \mathcal{K} & j(\mathcal{H}^\mathsf{T} - \mathcal{K}^\mathsf{T})\mathcal{D} & j\mathcal{L} & \mathcal{L} \\ j\mathcal{D}(\mathcal{H} - \mathcal{K}) & \mathcal{D}(\mathcal{G} + \mathcal{G}^\mathsf{T})\mathcal{D} & \mathcal{M} & -j\mathcal{M} \\ j\mathcal{L}^\mathsf{T} & \mathcal{M}^\mathsf{T} & \mathbf{0} & \mathbf{0} \\ \mathcal{L}^\mathsf{T} & -j\mathcal{M}^\mathsf{T} & \mathbf{0} & \mathbf{0} \end{bmatrix} \tag{8.30}$$

$$\hat{\mathbf{s}}^{l}_{\boldsymbol{\theta}\boldsymbol{\theta}}(\hat{\boldsymbol{\lambda}}) = \frac{\partial}{\partial \boldsymbol{\theta}} \left(\hat{\mathbf{s}}^{l\,\mathsf{T}}_{\boldsymbol{\theta}} \hat{\boldsymbol{\lambda}} \right) \tag{8.31}$$

$$= \frac{\partial}{\partial \boldsymbol{\theta}} \left(j \left(\underline{\boldsymbol{J}}^{\mathsf{T}} \left[\hat{\mathbf{i}}^{lin\,*} \right] [\hat{\mathbf{v}}] - [\mathbf{v}^*] \, \underline{\hat{\mathbf{Y}}}^{*\mathsf{T}} [\hat{\mathbf{v}}] \right) \hat{\boldsymbol{\lambda}} \right) \tag{8.32}$$

$$= j \frac{\partial}{\partial \boldsymbol{\theta}} \left(\underline{\boldsymbol{J}}^{\mathsf{T}} \left[\hat{\mathbf{i}}^{lin\,*} \right] [\hat{\mathbf{v}}] \, \hat{\boldsymbol{\lambda}} - [\mathbf{v}^*] \, \underline{\hat{\mathbf{Y}}}^{*\mathsf{T}} [\hat{\mathbf{v}}] \, \hat{\boldsymbol{\lambda}} \right) \tag{8.33}$$

$$\begin{aligned} = j \Bigg(& \underline{\boldsymbol{J}}^{\mathsf{T}} [\hat{\mathbf{v}}] [\hat{\boldsymbol{\lambda}}] \underbrace{\left(-j \underline{\hat{\mathbf{Y}}}^{*} [\mathbf{v}^*] \right)}_{\frac{\partial \hat{\mathbf{i}}^{lin\,*}}{\partial \boldsymbol{\theta}}} + \underline{\boldsymbol{J}}^{\mathsf{T}} \left[\hat{\mathbf{i}}^{lin\,*} \right] [\hat{\boldsymbol{\lambda}}] \underbrace{j \, [\hat{\mathbf{v}}] \, \underline{\boldsymbol{J}}}_{\frac{\partial \hat{\mathbf{v}}}{\partial \boldsymbol{\theta}}} \\ & - [\mathbf{v}^*] \, \underline{\hat{\mathbf{Y}}}^{*\mathsf{T}} [\hat{\boldsymbol{\lambda}}] \underbrace{j \, [\hat{\mathbf{v}}] \, \underline{\boldsymbol{J}}}_{\frac{\partial \hat{\mathbf{v}}}{\partial \boldsymbol{\theta}}} - \left[\underline{\hat{\mathbf{Y}}}^{*\mathsf{T}} [\hat{\mathbf{v}}] \, \hat{\boldsymbol{\lambda}} \right] \underbrace{\left(-j \, [\mathbf{v}^*] \right)}_{\frac{\partial \mathbf{v}^*}{\partial \boldsymbol{\theta}}} \Bigg) \end{aligned} \tag{8.34}$$

$$\begin{aligned} = & \underline{\boldsymbol{J}}^{\mathsf{T}} [\hat{\mathbf{v}}] [\hat{\boldsymbol{\lambda}}] \, \underline{\hat{\mathbf{Y}}}^{*} [\mathbf{v}^*] - \underline{\boldsymbol{J}}^{\mathsf{T}} \left[\hat{\mathbf{i}}^{lin\,*} \right] [\hat{\boldsymbol{\lambda}}] [\hat{\mathbf{v}}] \, \underline{\boldsymbol{J}} \\ & + [\mathbf{v}^*] \, \underline{\hat{\mathbf{Y}}}^{*\mathsf{T}} [\hat{\boldsymbol{\lambda}}] \, \underline{\boldsymbol{J}} \, [\mathbf{v}] - \left[\underline{\hat{\mathbf{Y}}}^{*\mathsf{T}} [\hat{\mathbf{v}}] \, \hat{\boldsymbol{\lambda}} \right] [\mathbf{v}^*] \end{aligned} \tag{8.35}$$

$$\begin{aligned} = & [\mathbf{v}^*] \left(\underline{\hat{\mathbf{Y}}}^{*\mathsf{T}} [\hat{\mathbf{v}}] [\hat{\boldsymbol{\lambda}}] \, \underline{\boldsymbol{J}} - \left[\underline{\hat{\mathbf{Y}}}^{*\mathsf{T}} [\hat{\mathbf{v}}] \, \hat{\boldsymbol{\lambda}} \right] \right) \\ & + \underline{\boldsymbol{J}}^{\mathsf{T}} [\hat{\boldsymbol{\lambda}}] [\hat{\mathbf{v}}] \left(\underline{\hat{\mathbf{Y}}}^{*} [\mathbf{v}^*] - \left[\hat{\mathbf{i}}^{lin\,*} \right] \underline{\boldsymbol{J}} \right) \end{aligned} \tag{8.36}$$

$$= \mathcal{H} + \mathcal{K} \tag{8.37}$$

$$\hat{\mathbf{s}}^{l}_{\boldsymbol{\nu}\boldsymbol{\theta}}(\hat{\boldsymbol{\lambda}}) = \frac{\partial}{\partial \boldsymbol{\theta}} \left(\hat{\mathbf{s}}^{l\,\mathsf{T}}_{\boldsymbol{\nu}} \hat{\boldsymbol{\lambda}} \right) \tag{8.38}$$

$$= \frac{\partial}{\partial \boldsymbol{\theta}} \left(\underline{\boldsymbol{J}}^{\mathsf{T}} [\hat{\mathbf{e}}] \left[\hat{\mathbf{i}}^{lin\,*} \right] \hat{\boldsymbol{\lambda}} + [\mathbf{e}^*] \, \underline{\hat{\mathbf{Y}}}^{*\mathsf{T}} [\hat{\mathbf{v}}] \, \hat{\boldsymbol{\lambda}} \right) \tag{8.39}$$

$$\begin{aligned} = & \underline{\boldsymbol{J}}^{\mathsf{T}} [\hat{\mathbf{e}}] [\hat{\boldsymbol{\lambda}}] \underbrace{\left(-j \underline{\hat{\mathbf{Y}}}^{*} [\mathbf{v}^*] \right)}_{\frac{\partial \hat{\mathbf{i}}^{lin\,*}}{\partial \boldsymbol{\theta}}} + \underline{\boldsymbol{J}}^{\mathsf{T}} \left[\hat{\mathbf{i}}^{lin\,*} \right] [\hat{\boldsymbol{\lambda}}] \underbrace{j \, [\hat{\mathbf{e}}] \, \underline{\boldsymbol{J}}}_{\frac{\partial \hat{\mathbf{e}}}{\partial \boldsymbol{\theta}}} \\ & + [\mathbf{e}^*] \, \underline{\hat{\mathbf{Y}}}^{*\mathsf{T}} [\hat{\boldsymbol{\lambda}}] \underbrace{j \, [\hat{\mathbf{v}}] \, \underline{\boldsymbol{J}}}_{\frac{\partial \hat{\mathbf{v}}}{\partial \boldsymbol{\theta}}} + \left[\underline{\hat{\mathbf{Y}}}^{*\mathsf{T}} [\hat{\mathbf{v}}] \, \hat{\boldsymbol{\lambda}} \right] \underbrace{\left(-j \, [\mathbf{e}^*] \right)}_{\frac{\partial \mathbf{e}^*}{\partial \boldsymbol{\theta}}} \end{aligned} \tag{8.40}$$

$$\begin{aligned} = j \Bigg(& [\mathbf{e}^*] \left(\underline{\hat{\mathbf{Y}}}^{*\mathsf{T}} [\hat{\mathbf{v}}] [\hat{\boldsymbol{\lambda}}] \, \underline{\boldsymbol{J}} - \left[\underline{\hat{\mathbf{Y}}}^{*\mathsf{T}} [\hat{\mathbf{v}}] \, \hat{\boldsymbol{\lambda}} \right] \right) \\ & - \underline{\boldsymbol{J}}^{\mathsf{T}} [\hat{\boldsymbol{\lambda}}] [\hat{\mathbf{e}}] \left(\underline{\hat{\mathbf{Y}}}^{*} [\mathbf{v}^*] - \left[\hat{\mathbf{i}}^{lin\,*} \right] \underline{\boldsymbol{J}} \right) \Bigg) \end{aligned} \tag{8.41}$$

$$
\begin{aligned}
&= j\,[\boldsymbol{\nu}]^{-1}\left([\mathbf{v}^*]\left(\underline{\hat{\mathbf{Y}}}^{*\mathsf{T}}[\hat{\mathbf{v}}]\,[\hat{\boldsymbol{\lambda}}]\,\underline{\boldsymbol{J}} - \left[\underline{\hat{\mathbf{Y}}}^{*\mathsf{T}}[\hat{\mathbf{v}}]\,\hat{\boldsymbol{\lambda}}\right]\right)\right.\\
&\quad \left. - \underline{\boldsymbol{J}}^{\mathsf{T}}[\hat{\boldsymbol{\lambda}}]\,[\hat{\mathbf{v}}]\left(\underline{\hat{\mathbf{Y}}}^{*}[\mathbf{v}^*] - \left[\hat{\mathbf{i}}^{lin*}\right]\underline{\boldsymbol{J}}\right)\right) && (8.42)\\
&= j\mathcal{D}(\mathcal{H}-\mathcal{K}) && (8.43)
\end{aligned}
$$

$$
\begin{aligned}
\hat{\mathbf{s}}^{l}_{\boldsymbol{z}_r\boldsymbol{\theta}}(\hat{\boldsymbol{\lambda}}) &= \frac{\partial}{\partial\boldsymbol{\theta}}\left(\hat{\mathbf{s}}^{l}_{\boldsymbol{z}_r}{}^{\mathsf{T}}\hat{\boldsymbol{\lambda}}\right) && (8.44)\\
&= \frac{\partial}{\partial\boldsymbol{\theta}}\left(\underline{\hat{\mathbf{L}}}^{*\mathsf{T}}[\hat{\mathbf{v}}]\,\hat{\boldsymbol{\lambda}}\right) && (8.45)\\
&= \underline{\hat{\mathbf{L}}}^{*\mathsf{T}}[\hat{\boldsymbol{\lambda}}]\,\underline{\boldsymbol{J}}(j\,[\mathbf{v}]) && (8.46)\\
&= j\underline{\hat{\mathbf{L}}}^{*\mathsf{T}}[\hat{\boldsymbol{\lambda}}]\,[\hat{\mathbf{v}}]\,\underline{\boldsymbol{J}} && (8.47)\\
&= j\mathcal{L}^{\mathsf{T}} && (8.48)
\end{aligned}
$$

$$
\hat{\mathbf{s}}^{l}_{\boldsymbol{z}_i\boldsymbol{\theta}}(\hat{\boldsymbol{\lambda}}) = \frac{\partial}{\partial\boldsymbol{\theta}}\left(\hat{\mathbf{s}}^{l}_{\boldsymbol{z}_i}{}^{\mathsf{T}}\hat{\boldsymbol{\lambda}}\right) = -j\hat{\mathbf{s}}^{l}_{\boldsymbol{z}_r\boldsymbol{\theta}}(\hat{\boldsymbol{\lambda}}) = \mathcal{L}^{\mathsf{T}} \tag{8.49}
$$

$$
\begin{aligned}
\hat{\mathbf{s}}^{l}_{\boldsymbol{\theta}\boldsymbol{\nu}}(\hat{\boldsymbol{\lambda}}) &= \frac{\partial}{\partial\boldsymbol{\nu}}\left(\hat{\mathbf{s}}^{l}_{\boldsymbol{\theta}}{}^{\mathsf{T}}\hat{\boldsymbol{\lambda}}\right) && (8.50)\\
&= j\left(\left(\underline{\boldsymbol{J}}^{\mathsf{T}}[\hat{\boldsymbol{\lambda}}]\,[\hat{\mathbf{v}}]\,\underline{\hat{\mathbf{Y}}}^{*} - \left[\underline{\hat{\mathbf{Y}}}^{*\mathsf{T}}[\hat{\mathbf{v}}]\,\hat{\boldsymbol{\lambda}}\right]\right)[\mathbf{v}^*]\right.\\
&\quad \left. - \left([\mathbf{v}^*]\,\underline{\hat{\mathbf{Y}}}^{*\mathsf{T}} - \underline{\boldsymbol{J}}^{\mathsf{T}}\left[\hat{\mathbf{i}}^{lin*}\right]\right)[\hat{\mathbf{v}}]\,[\hat{\boldsymbol{\lambda}}]\,\underline{\boldsymbol{J}}^{\mathsf{T}}\right)[\boldsymbol{\nu}]^{-1} && (8.51)\\
&= j(\mathcal{H}^{\mathsf{T}}-\mathcal{K}^{\mathsf{T}})\mathcal{D} = \hat{\mathbf{s}}^{l}_{\boldsymbol{\nu}\boldsymbol{\theta}}{}^{\mathsf{T}}(\hat{\boldsymbol{\lambda}}) && (8.52)
\end{aligned}
$$

$$
\begin{aligned}
\hat{\mathbf{s}}^{l}_{\boldsymbol{\nu}\boldsymbol{\nu}}(\hat{\boldsymbol{\lambda}}) &= \frac{\partial}{\partial\boldsymbol{\nu}}\left(\hat{\mathbf{s}}^{l}_{\boldsymbol{\nu}}{}^{\mathsf{T}}\hat{\boldsymbol{\lambda}}\right) && (8.53)\\
&= \frac{\partial}{\partial\boldsymbol{\nu}}\left(\underline{\boldsymbol{J}}^{\mathsf{T}}[\hat{\mathbf{e}}]\left[\hat{\mathbf{i}}^{lin*}\right]\hat{\boldsymbol{\lambda}} + [\mathbf{e}^*]\,\underline{\hat{\mathbf{Y}}}^{*\mathsf{T}}[\hat{\mathbf{v}}]\,\hat{\boldsymbol{\lambda}}\right) && (8.54)\\
&= \underline{\boldsymbol{J}}^{\mathsf{T}}[\hat{\mathbf{e}}]\,[\hat{\boldsymbol{\lambda}}]\underbrace{\underline{\hat{\mathbf{Y}}}^{*}[\mathbf{e}^*]}_{\frac{\partial\hat{\mathbf{i}}^{lin*}}{\partial\boldsymbol{\nu}}} + \underline{\boldsymbol{J}}^{\mathsf{T}}\left[\hat{\mathbf{i}}^{lin*}\right][\hat{\boldsymbol{\lambda}}]\underbrace{\mathbf{0}}_{\frac{\partial\hat{\mathbf{e}}}{\partial\boldsymbol{\nu}}}\\
&\quad + [\mathbf{e}^*]\,\underline{\hat{\mathbf{Y}}}^{*\mathsf{T}}[\hat{\boldsymbol{\lambda}}]\underbrace{[\hat{\mathbf{e}}]\,\underline{\boldsymbol{J}}}_{\frac{\partial\hat{\mathbf{v}}}{\partial\boldsymbol{\nu}}} + \left[\underline{\hat{\mathbf{Y}}}^{*\mathsf{T}}[\hat{\mathbf{v}}]\,\hat{\boldsymbol{\lambda}}\right]\underbrace{\mathbf{0}}_{\frac{\partial\hat{\mathbf{e}}^*}{\partial\boldsymbol{\nu}}} && (8.55)\\
&= [\boldsymbol{\nu}]^{-1}\left(\underline{\boldsymbol{J}}^{\mathsf{T}}[\hat{\boldsymbol{\lambda}}]\,[\hat{\mathbf{v}}]\,\underline{\hat{\mathbf{Y}}}^{*}[\mathbf{v}^*] + [\mathbf{v}^*]\,\underline{\hat{\mathbf{Y}}}^{*\mathsf{T}}[\hat{\mathbf{v}}]\,[\hat{\boldsymbol{\lambda}}]\,\underline{\boldsymbol{J}}\right)[\boldsymbol{\nu}]^{-1} && (8.56)\\
&= \mathcal{D}(\mathcal{G}+\mathcal{G}^{\mathsf{T}})\mathcal{D} && (8.57)
\end{aligned}
$$

$$\hat{\mathbf{s}}^{l}_{\boldsymbol{z}_r\boldsymbol{\nu}}(\hat{\boldsymbol{\lambda}}) = \frac{\partial}{\partial \boldsymbol{\nu}} \left(\hat{\mathbf{s}}^{l}_{\boldsymbol{z}_r}{}^{\mathsf{T}} \hat{\boldsymbol{\lambda}} \right) \tag{8.58}$$

$$= \frac{\partial}{\partial \boldsymbol{\nu}} \left(\hat{\underline{\mathbf{L}}}^{*\mathsf{T}} [\hat{\mathbf{v}}] \hat{\boldsymbol{\lambda}} \right) \tag{8.59}$$

$$= \hat{\underline{\mathbf{L}}}^{*\mathsf{T}} [\hat{\boldsymbol{\lambda}}] \underline{\boldsymbol{J}} [\mathbf{e}] \tag{8.60}$$

$$= \hat{\underline{\mathbf{L}}}^{*\mathsf{T}} [\hat{\boldsymbol{\lambda}}] [\hat{\mathbf{e}}] \underline{\boldsymbol{J}} \tag{8.61}$$

$$= \mathcal{M}^{\mathsf{T}} \tag{8.62}$$

$$\hat{\mathbf{s}}^{l}_{\boldsymbol{z}_i\boldsymbol{\nu}}(\hat{\boldsymbol{\lambda}}) = \frac{\partial}{\partial \boldsymbol{\nu}} \left(\hat{\mathbf{s}}^{l}_{\boldsymbol{z}_i}{}^{\mathsf{T}} \hat{\boldsymbol{\lambda}} \right) = -j\hat{\mathbf{s}}^{l}_{\boldsymbol{z}_r\boldsymbol{\nu}}(\hat{\boldsymbol{\lambda}}) = -j\mathcal{M}^{\mathsf{T}} \tag{8.63}$$

$$\hat{\mathbf{s}}^{l}_{\boldsymbol{\theta}\boldsymbol{z}_r}(\hat{\boldsymbol{\lambda}}) = \frac{\partial}{\partial \boldsymbol{z}_r} \left(\hat{\mathbf{s}}^{l}_{\boldsymbol{\theta}}{}^{\mathsf{T}} \hat{\boldsymbol{\lambda}} \right) \tag{8.64}$$

$$= \frac{\partial}{\partial \boldsymbol{z}_r} \left(j \left(\underline{\boldsymbol{J}}^{\mathsf{T}} \left[\hat{\mathbf{i}}^{lin*} \right] [\hat{\mathbf{v}}] - [\mathbf{v}^*] \hat{\underline{\mathbf{Y}}}^{*\mathsf{T}} [\hat{\mathbf{v}}] \right) \hat{\boldsymbol{\lambda}} \right) \tag{8.65}$$

$$= j\underline{\boldsymbol{J}}^{\mathsf{T}} [\hat{\boldsymbol{\lambda}}] [\hat{\mathbf{v}}] \frac{\partial \hat{\mathbf{i}}^{lin*}}{\partial \boldsymbol{z}_r} \tag{8.66}$$

$$= j\underline{\boldsymbol{J}}^{\mathsf{T}} [\hat{\boldsymbol{\lambda}}] [\hat{\mathbf{v}}] \hat{\underline{\mathbf{L}}}^{*} \tag{8.67}$$

$$= j\mathcal{L} = \hat{\mathbf{s}}^{l}_{\boldsymbol{z}_r\boldsymbol{\theta}}{}^{\mathsf{T}}(\hat{\boldsymbol{\lambda}}) \tag{8.68}$$

$$\hat{\mathbf{s}}^{l}_{\boldsymbol{\nu}\boldsymbol{z}_r}(\hat{\boldsymbol{\lambda}}) = \frac{\partial}{\partial \boldsymbol{z}_r} \left(\hat{\mathbf{s}}^{l}_{\boldsymbol{\nu}}{}^{\mathsf{T}} \hat{\boldsymbol{\lambda}} \right) \tag{8.69}$$

$$= \frac{\partial}{\partial \boldsymbol{z}_r} \left(\underline{\boldsymbol{J}}^{\mathsf{T}} [\hat{\mathbf{e}}] \left[\hat{\mathbf{i}}^{lin*} \right] \hat{\boldsymbol{\lambda}} + [\mathbf{e}^*] \hat{\underline{\mathbf{Y}}}^{*\mathsf{T}} [\hat{\mathbf{v}}] \hat{\boldsymbol{\lambda}} \right) \tag{8.70}$$

$$= \underline{\boldsymbol{J}}^{\mathsf{T}} [\hat{\boldsymbol{\lambda}}] [\hat{\mathbf{e}}] \frac{\partial \hat{\mathbf{i}}^{lin*}}{\partial \boldsymbol{z}_r} \tag{8.71}$$

$$= \underline{\boldsymbol{J}}^{\mathsf{T}} [\hat{\boldsymbol{\lambda}}] [\hat{\mathbf{e}}] \hat{\underline{\mathbf{L}}}^{*} \tag{8.72}$$

$$= \mathcal{M} = \hat{\mathbf{s}}^{l}_{\boldsymbol{z}_r\boldsymbol{\nu}}{}^{\mathsf{T}}(\hat{\boldsymbol{\lambda}}) \tag{8.73}$$

$$\hat{\mathbf{s}}^{l}_{\boldsymbol{\theta}\boldsymbol{z}_i}(\hat{\boldsymbol{\lambda}}) = \frac{\partial}{\partial \boldsymbol{z}_i} \left(\hat{\mathbf{s}}^{l}_{\boldsymbol{\theta}}{}^{\mathsf{T}} \hat{\boldsymbol{\lambda}} \right) = -j\hat{\mathbf{s}}^{l}_{\boldsymbol{\theta}\boldsymbol{z}_r} = \mathcal{L} = \hat{\mathbf{s}}^{l}_{\boldsymbol{z}_i\boldsymbol{\theta}}{}^{\mathsf{T}}(\hat{\boldsymbol{\lambda}}) \tag{8.74}$$

$$\hat{\mathbf{s}}^{l}_{\boldsymbol{\nu}\boldsymbol{z}_i}(\hat{\boldsymbol{\lambda}}) = \frac{\partial}{\partial \boldsymbol{z}_i} \left(\hat{\mathbf{s}}^{l}_{\boldsymbol{\nu}}{}^{\mathsf{T}} \hat{\boldsymbol{\lambda}} \right) = -j\hat{\mathbf{s}}^{l}_{\boldsymbol{\nu}\boldsymbol{z}_r} = -j\mathcal{M} = \hat{\mathbf{s}}^{l}_{\boldsymbol{z}_i\boldsymbol{\nu}}{}^{\mathsf{T}}(\hat{\boldsymbol{\lambda}}) \tag{8.75}$$

$$\hat{\mathbf{s}}^{l}_{\boldsymbol{z}_r\boldsymbol{z}_r}(\hat{\boldsymbol{\lambda}}) = \hat{\mathbf{s}}^{l}_{\boldsymbol{z}_r\boldsymbol{z}_i}(\hat{\boldsymbol{\lambda}}) = \hat{\mathbf{s}}^{l}_{\boldsymbol{z}_i\boldsymbol{z}_r}(\hat{\boldsymbol{\lambda}}) = \hat{\mathbf{s}}^{l}_{\boldsymbol{z}_i\boldsymbol{z}_i}(\hat{\boldsymbol{\lambda}}) = \mathbf{0} \tag{8.76}$$

8.2 Cartesian

We define the following terms, both for notational convenience for the derivations and for computational savings during computation of the derivatives.

$$\mathcal{A} = \left[\hat{\mathbf{i}}^{lin^*}\right] \underline{\boldsymbol{J}} \tag{8.77}$$

$$\mathcal{B} = [\hat{\mathbf{v}}]\, \underline{\hat{\mathbf{Y}}}^* \tag{8.78}$$

$$\mathcal{C} = [\hat{\mathbf{v}}]\, \underline{\hat{\mathbf{L}}}^* \tag{8.79}$$

$$\mathcal{D} = \underline{\boldsymbol{J}}^{\mathsf{T}} [\hat{\boldsymbol{\lambda}}] \tag{8.80}$$

$$\mathcal{E} = \mathcal{D}\underline{\hat{\mathbf{Y}}}^* \tag{8.81}$$

$$\mathcal{F} = \mathcal{E} + \mathcal{E}^{\mathsf{T}} \tag{8.82}$$

$$\mathcal{G} = j\left(\mathcal{E} - \mathcal{E}^{\mathsf{T}}\right) \tag{8.83}$$

$$\mathcal{H} = \mathcal{D}\underline{\hat{\mathbf{L}}}^* \tag{8.84}$$

8.2.1 First Derivatives

$$\hat{\mathbf{s}}^I_{\boldsymbol{x}} = \frac{\partial \hat{\mathbf{s}}^I}{\partial \boldsymbol{x}} = \begin{bmatrix} \frac{@\hat{\mathbf{s}}^I}{@\boldsymbol{u}} & \frac{@\hat{\mathbf{s}}^I}{@\boldsymbol{w}} & \frac{@\hat{\mathbf{s}}^I}{@\boldsymbol{z}_r} & \frac{@\hat{\mathbf{s}}^I}{@\boldsymbol{z}_i} \end{bmatrix} \tag{8.85}$$

$$= \begin{bmatrix} \mathcal{A} + \mathcal{B} & j\left(\mathcal{A} - \mathcal{B}\right) & \mathcal{C} & j\mathcal{C} \end{bmatrix} \tag{8.86}$$

$$\hat{\mathbf{s}}^I_{\boldsymbol{u}} = \frac{\partial \hat{\mathbf{s}}^I}{\partial \boldsymbol{u}} = \left[\hat{\mathbf{i}}^{lin^*}\right] \frac{\partial \hat{\mathbf{v}}}{\partial \boldsymbol{u}} + [\hat{\mathbf{v}}]\, \frac{\partial \hat{\mathbf{i}}^{lin^*}}{\partial \boldsymbol{u}} \tag{8.87}$$

$$= \left[\hat{\mathbf{i}}^{lin^*}\right] \underline{\boldsymbol{J}} + [\hat{\mathbf{v}}]\, \underline{\hat{\mathbf{Y}}}^* \tag{8.88}$$

$$= \mathcal{A} + \mathcal{B} \tag{8.89}$$

$$\hat{\mathbf{s}}^I_{\boldsymbol{w}} = \frac{\partial \hat{\mathbf{s}}^I}{\partial \boldsymbol{w}} = \left[\hat{\mathbf{i}}^{lin^*}\right] \frac{\partial \hat{\mathbf{v}}}{\partial \boldsymbol{w}} + [\hat{\mathbf{v}}]\, \frac{\partial \hat{\mathbf{i}}^{lin^*}}{\partial \boldsymbol{w}} \tag{8.90}$$

$$= j\left(\left[\hat{\mathbf{i}}^{lin^*}\right] \underline{\boldsymbol{J}} - [\hat{\mathbf{v}}]\, \underline{\hat{\mathbf{Y}}}^*\right) \tag{8.91}$$

$$= j\left(\mathcal{A} - \mathcal{B}\right) \tag{8.92}$$

$$\hat{\mathbf{s}}^I_{\boldsymbol{z}_r} = \frac{\partial \hat{\mathbf{s}}^I}{\partial \boldsymbol{z}_r} = [\hat{\mathbf{v}}]\, \hat{\mathbf{i}}^{lin^*}_{\boldsymbol{z}_r} + \left[\hat{\mathbf{i}}^{lin^*}\right] \hat{\mathbf{v}}_{\boldsymbol{z}_r} \tag{8.93}$$

$$= [\hat{\mathbf{v}}]\, \underline{\hat{\mathbf{L}}}^* = \mathcal{C} \tag{8.94}$$

$$\hat{\mathbf{s}}^{l}_{\boldsymbol{z}_i} = \frac{\partial \hat{\mathbf{s}}^{l}}{\partial \boldsymbol{z}_i} = -j\hat{\mathbf{s}}^{l}_{\boldsymbol{z}_r} = -j\mathcal{C} \tag{8.95}$$

8.2.2 Second Derivatives

$$\hat{\mathbf{s}}^{l}_{\boldsymbol{xx}}(\hat{\boldsymbol{\lambda}}) = \frac{\partial}{\partial \boldsymbol{x}} \left(\hat{\mathbf{s}}^{l\,\mathsf{T}}_{\boldsymbol{x}} \hat{\boldsymbol{\lambda}} \right) \tag{8.96}$$

$$= \begin{bmatrix} \hat{\mathbf{s}}^{l}_{\boldsymbol{uu}}(\hat{\boldsymbol{\lambda}}) & \hat{\mathbf{s}}^{l}_{\boldsymbol{uw}}(\hat{\boldsymbol{\lambda}}) & \hat{\mathbf{s}}^{l}_{\boldsymbol{uz}_r}(\hat{\boldsymbol{\lambda}}) & \hat{\mathbf{s}}^{l}_{\boldsymbol{uz}_i}(\hat{\boldsymbol{\lambda}}) \\ \hat{\mathbf{s}}^{l}_{\boldsymbol{wu}}(\hat{\boldsymbol{\lambda}}) & \hat{\mathbf{s}}^{l}_{\boldsymbol{ww}}(\hat{\boldsymbol{\lambda}}) & \hat{\mathbf{s}}^{l}_{\boldsymbol{wz}_r}(\hat{\boldsymbol{\lambda}}) & \hat{\mathbf{s}}^{l}_{\boldsymbol{wz}_i}(\hat{\boldsymbol{\lambda}}) \\ \hat{\mathbf{s}}^{l}_{\boldsymbol{z}_r\boldsymbol{u}}(\hat{\boldsymbol{\lambda}}) & \hat{\mathbf{s}}^{l}_{\boldsymbol{z}_r\boldsymbol{w}}(\hat{\boldsymbol{\lambda}}) & \mathbf{0} & \mathbf{0} \\ \hat{\mathbf{s}}^{l}_{\boldsymbol{z}_i\boldsymbol{u}}(\hat{\boldsymbol{\lambda}}) & \hat{\mathbf{s}}^{l}_{\boldsymbol{z}_i\boldsymbol{w}}(\hat{\boldsymbol{\lambda}}) & \mathbf{0} & \mathbf{0} \end{bmatrix} \tag{8.97}$$

$$= \begin{bmatrix} \mathcal{F} & \mathcal{G}^{\mathsf{T}} & \mathcal{H} & -j\mathcal{H} \\ \mathcal{G} & \mathcal{F} & j\mathcal{H} & \mathcal{H} \\ \mathcal{H}^{\mathsf{T}} & j\mathcal{H}^{\mathsf{T}} & \mathbf{0} & \mathbf{0} \\ -j\mathcal{H}^{\mathsf{T}} & \mathcal{H}^{\mathsf{T}} & \mathbf{0} & \mathbf{0} \end{bmatrix} \tag{8.98}$$

$$\hat{\mathbf{s}}^{l}_{\boldsymbol{uu}}(\hat{\boldsymbol{\lambda}}) = \frac{\partial}{\partial \boldsymbol{u}} \left(\hat{\mathbf{s}}^{l\,\mathsf{T}}_{\boldsymbol{u}} \hat{\boldsymbol{\lambda}} \right) \tag{8.99}$$

$$= \frac{\partial}{\partial \boldsymbol{u}} \left(\left(\underline{\boldsymbol{J}}^{\mathsf{T}} \left[\hat{\mathbf{i}}^{lin*} \right] + \underline{\hat{\mathbf{Y}}}^{*\mathsf{T}} \left[\hat{\mathbf{v}} \right] \right) \hat{\boldsymbol{\lambda}} \right) \tag{8.100}$$

$$= \frac{\partial}{\partial \boldsymbol{u}} \left(\underline{\boldsymbol{J}}^{\mathsf{T}} \left[\hat{\boldsymbol{\lambda}} \right] \hat{\mathbf{i}}^{lin*} + \underline{\hat{\mathbf{Y}}}^{*\mathsf{T}} \left[\hat{\boldsymbol{\lambda}} \right] \hat{\mathbf{v}} \right) \tag{8.101}$$

$$= \underline{\boldsymbol{J}}^{\mathsf{T}} \left[\hat{\boldsymbol{\lambda}} \right] \underline{\hat{\mathbf{Y}}}^{*} + \underline{\hat{\mathbf{Y}}}^{*\mathsf{T}} \left[\hat{\boldsymbol{\lambda}} \right] \underline{\boldsymbol{J}} \tag{8.102}$$

$$= \mathcal{F} \tag{8.103}$$

$$\hat{\mathbf{s}}^{l}_{\boldsymbol{wu}}(\hat{\boldsymbol{\lambda}}) = \frac{\partial}{\partial \boldsymbol{u}} \left(\hat{\mathbf{s}}^{l\,\mathsf{T}}_{\boldsymbol{w}} \hat{\boldsymbol{\lambda}} \right) \tag{8.104}$$

$$= \frac{\partial}{\partial \boldsymbol{u}} \left(j \left(\underline{\boldsymbol{J}}^{\mathsf{T}} \left[\hat{\mathbf{i}}^{lin*} \right] - \underline{\hat{\mathbf{Y}}}^{*\mathsf{T}} \left[\hat{\mathbf{v}} \right] \right) \hat{\boldsymbol{\lambda}} \right) \tag{8.105}$$

$$= j \frac{\partial}{\partial \boldsymbol{u}} \left(\underline{\boldsymbol{J}}^{\mathsf{T}} \left[\hat{\boldsymbol{\lambda}} \right] \hat{\mathbf{i}}^{lin*} - \underline{\hat{\mathbf{Y}}}^{*\mathsf{T}} \left[\hat{\boldsymbol{\lambda}} \right] \hat{\mathbf{v}} \right) \tag{8.106}$$

$$= j \left(\underline{\boldsymbol{J}}^{\mathsf{T}} \left[\hat{\boldsymbol{\lambda}} \right] \underline{\hat{\mathbf{Y}}}^{*} - \underline{\hat{\mathbf{Y}}}^{*\mathsf{T}} \left[\hat{\boldsymbol{\lambda}} \right] \underline{\boldsymbol{J}} \right) \tag{8.107}$$

$$= \mathcal{G} \tag{8.108}$$

$$\hat{\mathbf{s}}^{l}_{\boldsymbol{z}_r\boldsymbol{u}}(\hat{\boldsymbol{\lambda}}) = \frac{\partial}{\partial \boldsymbol{u}}\left(\hat{\mathbf{s}}^{l}_{\boldsymbol{z}_r}{}^{\mathsf{T}}\hat{\boldsymbol{\lambda}}\right) \tag{8.109}$$

$$= \frac{\partial}{\partial \boldsymbol{u}}\left(\hat{\underline{\mathbf{L}}}^{*\mathsf{T}}\left[\hat{\mathbf{v}}\right]\hat{\boldsymbol{\lambda}}\right) \tag{8.110}$$

$$= \hat{\underline{\mathbf{L}}}^{*\mathsf{T}}\left[\hat{\boldsymbol{\lambda}}\right]\underline{\boldsymbol{J}} \tag{8.111}$$

$$= \mathcal{H}^{\mathsf{T}} \tag{8.112}$$

$$\hat{\mathbf{s}}^{l}_{\boldsymbol{z}_i\boldsymbol{u}}(\hat{\boldsymbol{\lambda}}) = \frac{\partial}{\partial \boldsymbol{u}}\left(\hat{\mathbf{s}}^{l}_{\boldsymbol{z}_i}{}^{\mathsf{T}}\hat{\boldsymbol{\lambda}}\right) = -j\hat{\mathbf{s}}^{l}_{\boldsymbol{z}_r\boldsymbol{u}}(\hat{\boldsymbol{\lambda}}) = -j\mathcal{H}^{\mathsf{T}} \tag{8.113}$$

$$\hat{\mathbf{s}}^{l}_{\boldsymbol{u}\boldsymbol{w}}(\hat{\boldsymbol{\lambda}}) = \frac{\partial}{\partial \boldsymbol{w}}\left(\hat{\mathbf{s}}^{l}_{\boldsymbol{u}}{}^{\mathsf{T}}\hat{\boldsymbol{\lambda}}\right) \tag{8.114}$$

$$= \frac{\partial}{\partial \boldsymbol{w}}\left(\left(\underline{\boldsymbol{J}}^{\mathsf{T}}\left[\hat{\mathbf{i}}^{lin*}\right] + \hat{\underline{\mathbf{Y}}}^{*\mathsf{T}}\left[\hat{\mathbf{v}}\right]\right)\hat{\boldsymbol{\lambda}}\right) \tag{8.115}$$

$$= \frac{\partial}{\partial \boldsymbol{w}}\left(\underline{\boldsymbol{J}}^{\mathsf{T}}\left[\hat{\boldsymbol{\lambda}}\right]\hat{\mathbf{i}}^{lin*} + \hat{\underline{\mathbf{Y}}}^{*\mathsf{T}}\left[\hat{\boldsymbol{\lambda}}\right]\hat{\mathbf{v}}\right) \tag{8.116}$$

$$= j\left(\hat{\underline{\mathbf{Y}}}^{*\mathsf{T}}\left[\hat{\boldsymbol{\lambda}}\right]\underline{\boldsymbol{J}} - \underline{\boldsymbol{J}}^{\mathsf{T}}\left[\hat{\boldsymbol{\lambda}}\right]\hat{\underline{\mathbf{Y}}}^{*}\right) \tag{8.117}$$

$$= \mathcal{G}^{\mathsf{T}} = \hat{\mathbf{s}}^{l}_{\boldsymbol{w}\boldsymbol{u}}{}^{\mathsf{T}}(\hat{\boldsymbol{\lambda}}) \tag{8.118}$$

$$\hat{\mathbf{s}}^{l}_{\boldsymbol{w}\boldsymbol{w}}(\hat{\boldsymbol{\lambda}}) = \frac{\partial}{\partial \boldsymbol{w}}\left(\hat{\mathbf{s}}^{l}_{\boldsymbol{w}}{}^{\mathsf{T}}\hat{\boldsymbol{\lambda}}\right) \tag{8.119}$$

$$= \frac{\partial}{\partial \boldsymbol{w}}\left(j\left(\underline{\boldsymbol{J}}^{\mathsf{T}}\left[\hat{\mathbf{i}}^{lin*}\right] - \hat{\underline{\mathbf{Y}}}^{*\mathsf{T}}\left[\hat{\mathbf{v}}\right]\right)\hat{\boldsymbol{\lambda}}\right) \tag{8.120}$$

$$= j\frac{\partial}{\partial \boldsymbol{w}}\left(\underline{\boldsymbol{J}}^{\mathsf{T}}\left[\hat{\boldsymbol{\lambda}}\right]\hat{\mathbf{i}}^{lin*} - \hat{\underline{\mathbf{Y}}}^{*\mathsf{T}}\left[\hat{\boldsymbol{\lambda}}\right]\hat{\mathbf{v}}\right) \tag{8.121}$$

$$= j\left(\underline{\boldsymbol{J}}^{\mathsf{T}}\left[\hat{\boldsymbol{\lambda}}\right](-j\hat{\underline{\mathbf{Y}}}^{*}) - \hat{\underline{\mathbf{Y}}}^{*\mathsf{T}}\left[\hat{\boldsymbol{\lambda}}\right](j\underline{\boldsymbol{J}})\right) \tag{8.122}$$

$$= \underline{\boldsymbol{J}}^{\mathsf{T}}\left[\hat{\boldsymbol{\lambda}}\right]\hat{\underline{\mathbf{Y}}}^{*} + \hat{\underline{\mathbf{Y}}}^{*\mathsf{T}}\left[\hat{\boldsymbol{\lambda}}\right]\underline{\boldsymbol{J}} \tag{8.123}$$

$$= \mathcal{F} \tag{8.124}$$

$$\hat{\mathbf{s}}^{l}_{\boldsymbol{z}_r\boldsymbol{w}}(\hat{\boldsymbol{\lambda}}) = \frac{\partial}{\partial \boldsymbol{w}}\left(\hat{\mathbf{s}}^{l}_{\boldsymbol{z}_r}{}^{\mathsf{T}}\hat{\boldsymbol{\lambda}}\right) \tag{8.125}$$

$$= \frac{\partial}{\partial \boldsymbol{w}}\left(\hat{\underline{\mathbf{L}}}^{*\mathsf{T}}\left[\hat{\mathbf{v}}\right]\hat{\boldsymbol{\lambda}}\right) \tag{8.126}$$

$$= j\hat{\underline{\mathbf{L}}}^{*\mathsf{T}}\left[\hat{\boldsymbol{\lambda}}\right]\underline{\boldsymbol{J}} \tag{8.127}$$

$$= j\mathcal{H}^{\mathsf{T}} \tag{8.128}$$

$$\hat{\mathbf{s}}^{l}_{\boldsymbol{z}_i\boldsymbol{w}}(\hat{\boldsymbol{\lambda}}) = \frac{\partial}{\partial \boldsymbol{w}}\left(\hat{\mathbf{s}}^{l}_{\boldsymbol{z}_i}{}^{\mathsf{T}}\hat{\boldsymbol{\lambda}}\right) = -j\hat{\mathbf{s}}^{l}_{\boldsymbol{z}_r\boldsymbol{w}}(\hat{\boldsymbol{\lambda}}) = \mathcal{H}^{\mathsf{T}} \tag{8.129}$$

$$\hat{\mathbf{s}}^{l}_{\boldsymbol{u}\boldsymbol{z}_r}(\hat{\boldsymbol{\lambda}}) = \frac{\partial}{\partial \boldsymbol{z}_r}\left(\hat{\mathbf{s}}^{l}_{\boldsymbol{u}}{}^{\mathsf{T}}\hat{\boldsymbol{\lambda}}\right) \tag{8.130}$$

$$= \frac{\partial}{\partial \boldsymbol{z}_r}\left(\left(\underline{\boldsymbol{J}}^{\mathsf{T}}\left[\hat{\mathbf{i}}^{lin*}\right] + \underline{\hat{\mathbf{Y}}}^{*\mathsf{T}}\left[\hat{\mathbf{v}}\right]\right)\hat{\boldsymbol{\lambda}}\right) \tag{8.131}$$

$$= \underline{\boldsymbol{J}}^{\mathsf{T}}\left[\hat{\boldsymbol{\lambda}}\right]\frac{\partial \hat{\mathbf{i}}^{lin*}}{\partial \boldsymbol{z}_r} \tag{8.132}$$

$$= \underline{\boldsymbol{J}}^{\mathsf{T}}\left[\hat{\boldsymbol{\lambda}}\right]\underline{\hat{\mathbf{L}}}^{*} \tag{8.133}$$

$$= \mathcal{H} = \hat{\mathbf{s}}^{l}_{\boldsymbol{z}_r\boldsymbol{u}}{}^{\mathsf{T}}(\hat{\boldsymbol{\lambda}}) \tag{8.134}$$

$$\hat{\mathbf{s}}^{l}_{\boldsymbol{w}\boldsymbol{z}_r}(\hat{\boldsymbol{\lambda}}) = \frac{\partial}{\partial \boldsymbol{z}_r}\left(\hat{\mathbf{s}}^{l}_{\boldsymbol{w}}{}^{\mathsf{T}}\hat{\boldsymbol{\lambda}}\right) \tag{8.135}$$

$$= \frac{\partial}{\partial \boldsymbol{z}_r}\left(j\left(\underline{\boldsymbol{J}}^{\mathsf{T}}\left[\hat{\mathbf{i}}^{lin*}\right] - \underline{\hat{\mathbf{Y}}}^{*\mathsf{T}}\left[\hat{\mathbf{v}}\right]\right)\hat{\boldsymbol{\lambda}}\right) \tag{8.136}$$

$$= j\underline{\boldsymbol{J}}^{\mathsf{T}}\left[\hat{\boldsymbol{\lambda}}\right]\frac{\partial \hat{\mathbf{i}}^{lin*}}{\partial \boldsymbol{z}_r} \tag{8.137}$$

$$= j\underline{\boldsymbol{J}}^{\mathsf{T}}\left[\hat{\boldsymbol{\lambda}}\right]\underline{\hat{\mathbf{L}}}^{*} \tag{8.138}$$

$$= j\mathcal{H} = \hat{\mathbf{s}}^{l}_{\boldsymbol{z}_r\boldsymbol{w}}{}^{\mathsf{T}}(\hat{\boldsymbol{\lambda}}) \tag{8.139}$$

$$\hat{\mathbf{s}}^{l}_{\boldsymbol{w}\boldsymbol{z}_i}(\hat{\boldsymbol{\lambda}}) = \frac{\partial}{\partial \boldsymbol{z}_i}\left(\hat{\mathbf{s}}^{l}_{\boldsymbol{w}}{}^{\mathsf{T}}\hat{\boldsymbol{\lambda}}\right) = -j\hat{\mathbf{s}}^{l}_{\boldsymbol{w}\boldsymbol{z}_r}(\hat{\boldsymbol{\lambda}}) = \mathcal{H} = \hat{\mathbf{s}}^{l}_{\boldsymbol{z}_i\boldsymbol{w}}{}^{\mathsf{T}}(\hat{\boldsymbol{\lambda}}) \tag{8.140}$$

$$\hat{\mathbf{s}}^{l}_{\boldsymbol{z}_r\boldsymbol{z}_r}(\hat{\boldsymbol{\lambda}}) = \hat{\mathbf{s}}^{l}_{\boldsymbol{z}_r\boldsymbol{z}_i}(\hat{\boldsymbol{\lambda}}) = \hat{\mathbf{s}}^{l}_{\boldsymbol{z}_i\boldsymbol{z}_r}(\hat{\boldsymbol{\lambda}}) = \hat{\mathbf{s}}^{l}_{\boldsymbol{z}_i\boldsymbol{z}_i}(\hat{\boldsymbol{\lambda}}) = \mathbf{0} \tag{8.141}$$

9 Complex Current from Linear Power Term

This section considers the derivatives of the complex current injection term $\mathbf{i}^{\mathsf{S}}$ defined in (3.13), namely,

$$\hat{\mathbf{i}}^{\mathsf{S}}(\mathbf{x}) = \left[\hat{\mathbf{s}}^{lin}(\mathbf{x})\right]^{*} \hat{\boldsymbol{\Lambda}}^{*} \tag{9.1}$$

$$= \left[\underline{\hat{\mathbf{M}}}\mathbf{v} + \underline{\hat{\mathbf{N}}}\mathbf{z} + \underline{\hat{\mathbf{s}}}\right]^{*} \hat{\boldsymbol{\Lambda}}^{*}. \tag{9.2}$$

9.1 Polar

We define the following terms, both for notational convenience for the derivations and for computational savings during computation of the derivatives.

$$\mathcal{A} = [\hat{\boldsymbol{\Lambda}}^{*}] \left[\hat{\mathbf{s}}^{lin*}\right] \underline{\boldsymbol{J}} \tag{9.3}$$

$$\mathcal{B} = [\hat{\boldsymbol{\Lambda}}^{*}] \, \underline{\hat{\mathbf{M}}}^{*} \tag{9.4}$$

$$\mathcal{C} = \mathcal{A} - \mathcal{B}\,[\mathbf{v}^{*}] \tag{9.5}$$

$$= [\hat{\boldsymbol{\Lambda}}^{*}] \left[\hat{\mathbf{s}}^{lin*}\right] \underline{\boldsymbol{J}} - [\hat{\boldsymbol{\Lambda}}^{*}] \, \underline{\hat{\mathbf{M}}}^{*} \, [\mathbf{v}^{*}] \tag{9.6}$$

$$\mathcal{D} = [\boldsymbol{\nu}]^{-1} \tag{9.7}$$

$$\mathcal{E} = [\hat{\boldsymbol{\Lambda}}^{*}] \, \underline{\hat{\mathbf{N}}}^{*} \tag{9.8}$$

$$\mathcal{F} = \underline{\boldsymbol{J}}^{\mathsf{T}} \, [\hat{\boldsymbol{\lambda}}] \tag{9.9}$$

$$\mathcal{G} = \mathcal{F}\mathcal{B}\,[\mathbf{v}^{*}] \tag{9.10}$$

$$\mathcal{H} = \left[\mathcal{B}^{\mathsf{T}} \hat{\boldsymbol{\lambda}}\right] [\mathbf{v}^{*}] \tag{9.11}$$

$$\mathcal{K} = (\mathcal{F}\mathcal{A})^{\mathsf{T}} \tag{9.12}$$

$$\mathcal{L} = \mathcal{G} + \mathcal{G}^{\mathsf{T}} - \mathcal{H} - \mathcal{K} \tag{9.13}$$

$$\mathcal{M} = \mathcal{D}\left(2\mathcal{K} - \mathcal{G} - \mathcal{G}^{\mathsf{T}}\right)\mathcal{D} \tag{9.14}$$

$$\mathcal{N} = \mathcal{F}\mathcal{E} \tag{9.15}$$

$$\tag{9.16}$$

9.1.1 First Derivatives

$$\hat{\mathbf{i}}^{\mathsf{S}}_{\boldsymbol{x}} = \frac{\partial \hat{\mathbf{i}}^{\mathsf{S}}}{\partial \boldsymbol{x}} = \begin{bmatrix} \frac{@\hat{\mathbf{i}}^{S}}{@\boldsymbol{\theta}} & \frac{@\hat{\mathbf{i}}^{S}}{@\boldsymbol{\nu}} & \frac{@\hat{\mathbf{i}}^{S}}{@\boldsymbol{z}_r} & \frac{@\hat{\mathbf{i}}^{S}}{@\boldsymbol{z}_i} \end{bmatrix} \tag{9.17}$$

$$= \begin{bmatrix} j\mathcal{C} & -\mathcal{C}\mathcal{D} & \mathcal{E} & -j\mathcal{E} \end{bmatrix} \tag{9.18}$$

$$\hat{\mathbf{i}}^{\mathsf{S}}_{\boldsymbol{\theta}} = \frac{\partial \hat{\mathbf{i}}^{\mathsf{S}}}{\partial \boldsymbol{\theta}} = \left[\hat{\mathbf{s}}^{lin*}\right] \underbrace{j\left[\hat{\boldsymbol{\Lambda}}^{*}\right]\underline{\boldsymbol{J}}}_{\frac{\partial \hat{\ }^{*}}{\partial \boldsymbol{\theta}}} + \left[\hat{\boldsymbol{\Lambda}}^{*}\right] \underbrace{\left(-j\underline{\hat{\mathbf{M}}}^{*}\left[\mathbf{v}^{*}\right]\right)}_{\frac{\partial \mathbf{s}^{lin*}}{\partial \boldsymbol{\theta}}} \tag{9.19}$$

$$= j\left[\hat{\boldsymbol{\Lambda}}^{*}\right]\left(\left[\hat{\mathbf{s}}^{lin*}\right]\underline{\boldsymbol{J}} - \underline{\hat{\mathbf{M}}}^{*}\left[\mathbf{v}^{*}\right]\right) \tag{9.20}$$

$$= j\mathcal{C} \tag{9.21}$$

$$\hat{\mathbf{i}}^{\mathsf{S}}_{\boldsymbol{\nu}} = \frac{\partial \hat{\mathbf{i}}^{\mathsf{S}}}{\partial \boldsymbol{\nu}} = \left[\hat{\mathbf{s}}^{lin*}\right] \underbrace{\left(-\left[\hat{\boldsymbol{\nu}}\right]^{-1}\left[\hat{\boldsymbol{\Lambda}}^{*}\right]\underline{\boldsymbol{J}}\right)}_{\frac{\partial \hat{\ }^{*}}{\partial \boldsymbol{\nu}}} + \left[\hat{\boldsymbol{\Lambda}}^{*}\right] \underbrace{\underline{\hat{\mathbf{M}}}^{*}\left[\boldsymbol{\nu}\right]^{-1}\left[\mathbf{v}^{*}\right]}_{\frac{\partial \mathbf{s}^{lin*}}{\partial \boldsymbol{\nu}}} \tag{9.22}$$

$$= -\left[\hat{\boldsymbol{\Lambda}}^{*}\right]\left(\left[\hat{\mathbf{s}}^{lin*}\right]\underline{\boldsymbol{J}} - \underline{\hat{\mathbf{M}}}^{*}\left[\mathbf{v}^{*}\right]\right)\left[\boldsymbol{\nu}\right]^{-1} \tag{9.23}$$

$$= -\mathcal{C}\mathcal{D} \tag{9.24}$$

$$\hat{\mathbf{i}}^{\mathsf{S}}_{\boldsymbol{z}_r} = \frac{\partial \hat{\mathbf{i}}^{\mathsf{S}}}{\partial \boldsymbol{z}_r} = \left[\hat{\mathbf{s}}^{lin*}\right] \underbrace{\mathbf{0}}_{\frac{\partial \hat{\ }^{*}}{\partial \boldsymbol{z}_r}} + \left[\hat{\boldsymbol{\Lambda}}^{*}\right] \underbrace{\underline{\hat{\mathbf{N}}}^{*}}_{\frac{\partial \mathbf{s}^{lin*}}{\partial \boldsymbol{z}_r}} \tag{9.25}$$

$$= \left[\hat{\boldsymbol{\Lambda}}^{*}\right]\underline{\hat{\mathbf{N}}}^{*} \tag{9.26}$$

$$= \mathcal{E} \tag{9.27}$$

$$\hat{\mathbf{i}}^{\mathsf{S}}_{\boldsymbol{z}_i} = \frac{\partial \hat{\mathbf{i}}^{\mathsf{S}}}{\partial \boldsymbol{z}_i} = -j\hat{\mathbf{i}}^{\mathsf{S}}_{\boldsymbol{z}_r} = -j\mathcal{E} \tag{9.28}$$

9.1.2 Second Derivatives

Since $\mathbf{i}^{\mathsf{S}}_{\boldsymbol{z}_r}$ and $\mathbf{i}^{\mathsf{S}}_{\boldsymbol{z}_i}$ are constant with respect to $\boldsymbol{z}_r$ and $\boldsymbol{z}_i$, all second derivatives involving only $\boldsymbol{z}_r$ and $\boldsymbol{z}_i$ are zero. Some of the second derivatives of $\mathbf{i}^{\mathsf{S}}$ are derived using the first derivatives of $\mathcal{C}^{\mathsf{T}}\hat{\boldsymbol{\lambda}}$, which are derived first as follows.

$$\frac{\partial}{\partial \boldsymbol{\theta}}\left(\mathcal{C}^{\mathsf{T}}\hat{\boldsymbol{\lambda}}\right) = \frac{\partial}{\partial \boldsymbol{\theta}}\left(\left(\underline{\boldsymbol{J}}^{\mathsf{T}}\left[\hat{\mathbf{s}}^{lin*}\right] - [\mathbf{v}^*]\,\underline{\hat{\mathbf{M}}}^{*\mathsf{T}}\right)[\hat{\boldsymbol{\Lambda}}^*]\,\hat{\boldsymbol{\lambda}}\right) \tag{9.29}$$

$$= \frac{\partial}{\partial \boldsymbol{\theta}}\left(\underline{\boldsymbol{J}}^{\mathsf{T}}\left[\hat{\mathbf{s}}^{lin*}\right][\hat{\boldsymbol{\Lambda}}^*]\,\hat{\boldsymbol{\lambda}}\right) - \frac{\partial}{\partial \boldsymbol{\theta}}\left([\mathbf{v}^*]\,\underline{\hat{\mathbf{M}}}^{*\mathsf{T}}[\hat{\boldsymbol{\Lambda}}^*]\,\hat{\boldsymbol{\lambda}}\right) \tag{9.30}$$

$$= \underline{\boldsymbol{J}}^{\mathsf{T}}\left[\hat{\mathbf{s}}^{lin*}\right][\hat{\boldsymbol{\lambda}}]\underbrace{j\,[\hat{\boldsymbol{\Lambda}}^*]\,\underline{\boldsymbol{J}}}_{\frac{\partial \hat{\ }^*}{\partial \boldsymbol{\theta}}} + \underline{\boldsymbol{J}}^{\mathsf{T}}[\hat{\boldsymbol{\Lambda}}^*][\hat{\boldsymbol{\lambda}}]\underbrace{(-j\underline{\hat{\mathbf{M}}}^*[\mathbf{v}^*])}_{\frac{\partial \mathbf{s}^{lin*}}{\partial \boldsymbol{\theta}}}$$

$$- [\mathbf{v}^*]\,\underline{\hat{\mathbf{M}}}^{*\mathsf{T}}[\hat{\boldsymbol{\lambda}}]\underbrace{j\,[\hat{\boldsymbol{\Lambda}}^*]\,\underline{\boldsymbol{J}}}_{\frac{\partial \hat{\ }^*}{\partial \boldsymbol{\theta}}} - \left[\underline{\hat{\mathbf{M}}}^{*\mathsf{T}}[\hat{\boldsymbol{\Lambda}}^*]\,\hat{\boldsymbol{\lambda}}\right]\underbrace{(-j\,[\mathbf{v}^*])}_{\frac{\partial \mathbf{v}^*}{\partial \boldsymbol{\theta}}} \tag{9.31}$$

$$= -j\left(\underline{\boldsymbol{J}}^{\mathsf{T}}[\hat{\boldsymbol{\Lambda}}^*][\hat{\boldsymbol{\lambda}}]\,\underline{\hat{\mathbf{M}}}^*[\mathbf{v}^*] + [\mathbf{v}^*]\,\underline{\hat{\mathbf{M}}}^{*\mathsf{T}}[\hat{\boldsymbol{\lambda}}][\hat{\boldsymbol{\Lambda}}^*]\,\underline{\boldsymbol{J}}\right.$$

$$\left. - \left[\underline{\hat{\mathbf{M}}}^{*\mathsf{T}}[\hat{\boldsymbol{\Lambda}}^*]\,\hat{\boldsymbol{\lambda}}\right][\mathbf{v}^*] - \underline{\boldsymbol{J}}^{\mathsf{T}}\left[\hat{\mathbf{s}}^{lin*}\right][\hat{\boldsymbol{\lambda}}][\hat{\boldsymbol{\Lambda}}^*]\,\underline{\boldsymbol{J}}\right) \tag{9.32}$$

$$= -j\mathcal{L} \tag{9.33}$$

$$\frac{\partial}{\partial \boldsymbol{\nu}}\left(\mathcal{C}^{\mathsf{T}}\hat{\boldsymbol{\lambda}}\right) = \frac{\partial}{\partial \boldsymbol{\nu}}\left(\left(\underline{\boldsymbol{J}}^{\mathsf{T}}\left[\hat{\mathbf{s}}^{lin*}\right] - [\mathbf{v}^*]\,\underline{\hat{\mathbf{M}}}^{*\mathsf{T}}\right)[\hat{\boldsymbol{\Lambda}}^*]\,\hat{\boldsymbol{\lambda}}\right) \tag{9.34}$$

$$= \frac{\partial}{\partial \boldsymbol{\nu}}\left(\underline{\boldsymbol{J}}^{\mathsf{T}}\left[\hat{\mathbf{s}}^{lin*}\right][\hat{\boldsymbol{\Lambda}}^*]\,\hat{\boldsymbol{\lambda}}\right) - \frac{\partial}{\partial \boldsymbol{\nu}}\left([\mathbf{v}^*]\,\underline{\hat{\mathbf{M}}}^{*\mathsf{T}}[\hat{\boldsymbol{\Lambda}}^*]\,\hat{\boldsymbol{\lambda}}\right) \tag{9.35}$$

$$= \underline{\boldsymbol{J}}^{\mathsf{T}}\left[\hat{\mathbf{s}}^{lin*}\right][\hat{\boldsymbol{\lambda}}]\underbrace{(-[\hat{\boldsymbol{\nu}}]^{-1}[\hat{\boldsymbol{\Lambda}}^*]\,\underline{\boldsymbol{J}})}_{\frac{\partial \hat{\ }^*}{\partial \boldsymbol{\nu}}} + \underline{\boldsymbol{J}}^{\mathsf{T}}[\hat{\boldsymbol{\Lambda}}^*][\hat{\boldsymbol{\lambda}}]\underbrace{(\underline{\hat{\mathbf{M}}}^*[\mathbf{e}^*])}_{\frac{\partial \mathbf{s}^{lin*}}{\partial \boldsymbol{\nu}}}$$

$$- [\mathbf{v}^*]\,\underline{\hat{\mathbf{M}}}^{*\mathsf{T}}[\hat{\boldsymbol{\lambda}}]\underbrace{(-[\hat{\boldsymbol{\nu}}]^{-1}[\hat{\boldsymbol{\Lambda}}^*]\,\underline{\boldsymbol{J}})}_{\frac{\partial \hat{\ }^*}{\partial \boldsymbol{\nu}}} - \left[\underline{\hat{\mathbf{M}}}^{*\mathsf{T}}[\hat{\boldsymbol{\Lambda}}^*]\,\hat{\boldsymbol{\lambda}}\right]\underbrace{[\mathbf{e}^*]}_{\frac{\partial \mathbf{v}^*}{\partial \boldsymbol{\nu}}} \tag{9.36}$$

$$= \left(\underline{\boldsymbol{J}}^{\mathsf{T}}[\hat{\boldsymbol{\Lambda}}^*][\hat{\boldsymbol{\lambda}}]\,\underline{\hat{\mathbf{M}}}^*[\mathbf{v}^*] + [\mathbf{v}^*]\,\underline{\hat{\mathbf{M}}}^{*\mathsf{T}}[\hat{\boldsymbol{\lambda}}][\hat{\boldsymbol{\Lambda}}^*]\,\underline{\boldsymbol{J}}\right.$$

$$\left. - \left[\underline{\hat{\mathbf{M}}}^{*\mathsf{T}}[\hat{\boldsymbol{\Lambda}}^*]\,\hat{\boldsymbol{\lambda}}\right][\mathbf{v}^*] - \underline{\boldsymbol{J}}^{\mathsf{T}}\left[\hat{\mathbf{s}}^{lin*}\right][\hat{\boldsymbol{\lambda}}][\hat{\boldsymbol{\Lambda}}^*]\,\underline{\boldsymbol{J}}\right)[\boldsymbol{\nu}]^{-1} \tag{9.37}$$

$$= \mathcal{L}\mathcal{D} \tag{9.38}$$

$$\frac{\partial}{\partial \boldsymbol{z}_r}\left(\mathcal{C}^{\mathsf{T}}\hat{\boldsymbol{\lambda}}\right) = \frac{\partial}{\partial \boldsymbol{z}_r}\left(\left(\underline{\boldsymbol{J}}^{\mathsf{T}}\left[\hat{\mathbf{s}}^{lin*}\right] - [\mathbf{v}^*]\,\underline{\hat{\mathbf{M}}}^{*^{\mathsf{T}}}\right)[\hat{\boldsymbol{\Lambda}}^*]\,\hat{\boldsymbol{\lambda}}\right) \tag{9.39}$$

$$= \frac{\partial}{\partial \boldsymbol{z}_r}\left(\underline{\boldsymbol{J}}^{\mathsf{T}}\left[\hat{\mathbf{s}}^{lin*}\right][\hat{\boldsymbol{\Lambda}}^*]\,\hat{\boldsymbol{\lambda}}\right) \tag{9.40}$$

$$= \underline{\boldsymbol{J}}^{\mathsf{T}}[\hat{\boldsymbol{\lambda}}]\,[\hat{\boldsymbol{\Lambda}}^*]\underbrace{\underline{\hat{\mathbf{N}}}^*}_{\frac{\partial \hat{\mathbf{s}}^{lin*}}{\partial \boldsymbol{z}_r}} \tag{9.41}$$

$$= \underline{\boldsymbol{J}}^{\mathsf{T}}[\hat{\boldsymbol{\lambda}}]\,\mathcal{E} = \mathcal{N} \tag{9.42}$$

$$\frac{\partial}{\partial \boldsymbol{z}_i}\left(\mathcal{C}^{\mathsf{T}}\hat{\boldsymbol{\lambda}}\right) = -j\frac{\partial}{\partial \boldsymbol{z}_r}\left(\mathcal{C}^{\mathsf{T}}\hat{\boldsymbol{\lambda}}\right) = -j\mathcal{N} \tag{9.43}$$

The second derivatives of $\mathbf{i}^{\mathsf{S}}$ are then derived as follows.

$$\hat{\mathbf{i}}^{\mathsf{S}}_{\boldsymbol{xx}}(\hat{\boldsymbol{\lambda}}) = \frac{\partial}{\partial \boldsymbol{x}}\left(\hat{\mathbf{i}}^{\mathsf{S}^{\mathsf{T}}}_{\boldsymbol{x}}\hat{\boldsymbol{\lambda}}\right) \tag{9.44}$$

$$= \begin{bmatrix} \hat{\mathbf{i}}^{\mathsf{S}}_{\boldsymbol{\theta\theta}}(\hat{\boldsymbol{\lambda}}) & \hat{\mathbf{i}}^{\mathsf{S}}_{\boldsymbol{\theta\nu}}(\hat{\boldsymbol{\lambda}}) & \hat{\mathbf{i}}^{\mathsf{S}}_{\boldsymbol{\theta z}_r}(\hat{\boldsymbol{\lambda}}) & \hat{\mathbf{i}}^{\mathsf{S}}_{\boldsymbol{\theta z}_i}(\hat{\boldsymbol{\lambda}}) \\ \hat{\mathbf{i}}^{\mathsf{S}}_{\boldsymbol{\nu\theta}}(\hat{\boldsymbol{\lambda}}) & \hat{\mathbf{i}}^{\mathsf{S}}_{\boldsymbol{\nu\nu}}(\hat{\boldsymbol{\lambda}}) & \hat{\mathbf{i}}^{\mathsf{S}}_{\boldsymbol{\nu z}_r}(\hat{\boldsymbol{\lambda}}) & \hat{\mathbf{i}}^{\mathsf{S}}_{\boldsymbol{\nu z}_i}(\hat{\boldsymbol{\lambda}}) \\ \hat{\mathbf{i}}^{\mathsf{S}}_{\boldsymbol{z}_r\boldsymbol{\theta}}(\hat{\boldsymbol{\lambda}}) & \hat{\mathbf{i}}^{\mathsf{S}}_{\boldsymbol{z}_r\boldsymbol{\nu}}(\hat{\boldsymbol{\lambda}}) & \mathbf{0} & \mathbf{0} \\ \hat{\mathbf{i}}^{\mathsf{S}}_{\boldsymbol{z}_i\boldsymbol{\theta}}(\hat{\boldsymbol{\lambda}}) & \hat{\mathbf{i}}^{\mathsf{S}}_{\boldsymbol{z}_i\boldsymbol{\nu}}(\hat{\boldsymbol{\lambda}}) & \mathbf{0} & \mathbf{0} \end{bmatrix} \tag{9.45}$$

$$= \begin{bmatrix} \mathcal{L} & j\mathcal{L}^{\mathsf{T}}\mathcal{D} & j\mathcal{N} & \mathcal{N} \\ j\mathcal{D}\mathcal{L} & \mathcal{M} & -\mathcal{D}\mathcal{N} & j\mathcal{D}\mathcal{N} \\ j\mathcal{N}^{\mathsf{T}} & -\mathcal{N}^{\mathsf{T}}\mathcal{D} & \mathbf{0} & \mathbf{0} \\ \mathcal{N}^{\mathsf{T}} & j\mathcal{N}^{\mathsf{T}}\mathcal{D} & \mathbf{0} & \mathbf{0} \end{bmatrix} \tag{9.46}$$

$$\hat{\mathbf{i}}^{\mathsf{S}}_{\boldsymbol{\theta\theta}}(\hat{\boldsymbol{\lambda}}) = \frac{\partial}{\partial \boldsymbol{\theta}}\left(\hat{\mathbf{i}}^{\mathsf{S}^{\mathsf{T}}}_{\boldsymbol{\theta}}\hat{\boldsymbol{\lambda}}\right) = \frac{\partial}{\partial \boldsymbol{\theta}}\left(j\mathcal{C}^{\mathsf{T}}\hat{\boldsymbol{\lambda}}\right) = j\frac{\partial}{\partial \boldsymbol{\theta}}\left(\mathcal{C}^{\mathsf{T}}\hat{\boldsymbol{\lambda}}\right) \tag{9.47}$$

$$= j(-j\mathcal{L}) \tag{9.48}$$

$$= \mathcal{L} \tag{9.49}$$

$$\hat{\mathbf{i}}^{\mathsf{S}}_{\boldsymbol{\nu\theta}}(\hat{\boldsymbol{\lambda}}) = \frac{\partial}{\partial \boldsymbol{\theta}}\left(\hat{\mathbf{i}}^{\mathsf{S}^{\mathsf{T}}}_{\boldsymbol{\nu}}\hat{\boldsymbol{\lambda}}\right) = \frac{\partial}{\partial \boldsymbol{\theta}}\left(-[\boldsymbol{\nu}]^{-1}\mathcal{C}^{\mathsf{T}}\hat{\boldsymbol{\lambda}}\right) = -[\boldsymbol{\nu}]^{-1}\frac{\partial}{\partial \boldsymbol{\theta}}\left(\mathcal{C}^{\mathsf{T}}\hat{\boldsymbol{\lambda}}\right) \tag{9.50}$$

$$= -[\boldsymbol{\nu}]^{-1}(-j\mathcal{L}) \tag{9.51}$$

$$= j\mathcal{D}\mathcal{L} \tag{9.52}$$

$$\hat{\mathbf{i}}^{\mathsf{S}}_{\boldsymbol{z}_r\boldsymbol{\theta}}(\hat{\boldsymbol{\lambda}}) = \frac{\partial}{\partial\boldsymbol{\theta}}\left(\hat{\mathbf{i}}^{\mathsf{S}}_{\boldsymbol{z}_r}{}^{\mathsf{T}}\hat{\boldsymbol{\lambda}}\right) \tag{9.53}$$

$$= \frac{\partial}{\partial\boldsymbol{\theta}}\left(\hat{\underline{\mathbf{N}}}^{*\mathsf{T}}\left[\hat{\boldsymbol{\Lambda}}^{*}\right]\hat{\boldsymbol{\lambda}}\right) \tag{9.54}$$

$$= \hat{\underline{\mathbf{N}}}^{*\mathsf{T}}\left[\hat{\boldsymbol{\lambda}}\right]\hat{\boldsymbol{\Lambda}}^{*}_{\boldsymbol{\theta}} \tag{9.55}$$

$$= \hat{\underline{\mathbf{N}}}^{*\mathsf{T}}\left[\hat{\boldsymbol{\lambda}}\right]\underline{\boldsymbol{J}}j\left[\boldsymbol{\Lambda}^{*}\right] \tag{9.56}$$

$$= j\hat{\underline{\mathbf{N}}}^{*\mathsf{T}}\left[\hat{\boldsymbol{\lambda}}\right]\left[\hat{\boldsymbol{\Lambda}}^{*}\right]\underline{\boldsymbol{J}} \tag{9.57}$$

$$= j\mathcal{N}^{\mathsf{T}} \tag{9.58}$$

$$\hat{\mathbf{i}}^{\mathsf{S}}_{\boldsymbol{z}_i\boldsymbol{\theta}}(\hat{\boldsymbol{\lambda}}) = \frac{\partial}{\partial\boldsymbol{\theta}}\left(\hat{\mathbf{i}}^{\mathsf{S}}_{\boldsymbol{z}_i}{}^{\mathsf{T}}\hat{\boldsymbol{\lambda}}\right) = -j\hat{\mathbf{i}}^{\mathsf{S}}_{\boldsymbol{z}_r\boldsymbol{\theta}}(\hat{\boldsymbol{\lambda}}) = \mathcal{N}^{\mathsf{T}} \tag{9.59}$$

$$\hat{\mathbf{i}}^{\mathsf{S}}_{\boldsymbol{\theta}\boldsymbol{\nu}}(\hat{\boldsymbol{\lambda}}) = \frac{\partial}{\partial\boldsymbol{\nu}}\left(\hat{\mathbf{i}}^{\mathsf{S}}_{\boldsymbol{\theta}}{}^{\mathsf{T}}\hat{\boldsymbol{\lambda}}\right) = \frac{\partial}{\partial\boldsymbol{\nu}}\left(j\mathcal{C}^{\mathsf{T}}\hat{\boldsymbol{\lambda}}\right) = j\frac{\partial}{\partial\boldsymbol{\nu}}\left(\mathcal{C}^{\mathsf{T}}\hat{\boldsymbol{\lambda}}\right) \tag{9.60}$$

$$= j\mathcal{L}^{\mathsf{T}}\mathcal{D} = \hat{\mathbf{i}}^{\mathsf{S}}_{\boldsymbol{\nu}\boldsymbol{\theta}}{}^{\mathsf{T}}(\hat{\boldsymbol{\lambda}}) \tag{9.61}$$

$$\hat{\mathbf{i}}^{\mathsf{S}}_{\boldsymbol{\nu}\boldsymbol{\nu}}(\hat{\boldsymbol{\lambda}}) = \frac{\partial}{\partial\boldsymbol{\nu}}\left(\hat{\mathbf{i}}^{\mathsf{S}}_{\boldsymbol{\nu}}{}^{\mathsf{T}}\hat{\boldsymbol{\lambda}}\right) = \frac{\partial}{\partial\boldsymbol{\nu}}\left(-\left[\boldsymbol{\nu}\right]^{-1}\mathcal{C}^{\mathsf{T}}\hat{\boldsymbol{\lambda}}\right) \tag{9.62}$$

$$= -\left[\boldsymbol{\nu}\right]^{-1}\frac{\partial}{\partial\boldsymbol{\nu}}\left(\mathcal{C}^{\mathsf{T}}\hat{\boldsymbol{\lambda}}\right) - \left[\mathcal{C}^{\mathsf{T}}\hat{\boldsymbol{\lambda}}\right]\frac{\partial}{\partial\boldsymbol{\nu}}\left(\boldsymbol{\nu}^{-1}\right) \tag{9.63}$$

$$= -\left[\boldsymbol{\nu}\right]^{-1}\mathcal{L}\left[\boldsymbol{\nu}\right]^{-1} + \left[\mathcal{C}^{\mathsf{T}}\hat{\boldsymbol{\lambda}}\right]\left[\boldsymbol{\nu}\right]^{-2} \tag{9.64}$$

$$= -\left[\boldsymbol{\nu}\right]^{-1}\left(\mathcal{L} - \left[\mathcal{C}^{\mathsf{T}}\hat{\boldsymbol{\lambda}}\right]\right)\left[\boldsymbol{\nu}\right]^{-1} \tag{9.65}$$

$$\begin{aligned} = -\left[\boldsymbol{\nu}\right]^{-1}\Big(&\underline{\boldsymbol{J}}^{\mathsf{T}}\left[\hat{\boldsymbol{\Lambda}}^{*}\right]\left[\hat{\boldsymbol{\lambda}}\right]\hat{\underline{\mathbf{M}}}^{*}\left[\mathbf{v}^{*}\right] + \left[\mathbf{v}^{*}\right]\hat{\underline{\mathbf{M}}}^{*\mathsf{T}}\left[\hat{\boldsymbol{\lambda}}\right]\left[\hat{\boldsymbol{\Lambda}}^{*}\right]\underline{\boldsymbol{J}} \\ &- \left[\hat{\underline{\mathbf{M}}}^{*\mathsf{T}}\left[\hat{\boldsymbol{\Lambda}}^{*}\right]\hat{\boldsymbol{\lambda}}\right]\left[\mathbf{v}^{*}\right] - \underline{\boldsymbol{J}}^{\mathsf{T}}\left[\hat{\mathbf{s}}^{lin*}\right]\left[\hat{\boldsymbol{\lambda}}\right]\left[\hat{\boldsymbol{\Lambda}}^{*}\right]\underline{\boldsymbol{J}} \\ &- \left[\left(\underline{\boldsymbol{J}}^{\mathsf{T}}\left[\hat{\mathbf{s}}^{lin*}\right] - \left[\mathbf{v}^{*}\right]\hat{\underline{\mathbf{M}}}^{*\mathsf{T}}\right)\left[\hat{\boldsymbol{\Lambda}}^{*}\right]\hat{\boldsymbol{\lambda}}\right]\Big)\left[\boldsymbol{\nu}\right]^{-1} \end{aligned} \tag{9.66}$$

$$\begin{aligned} = -\left[\boldsymbol{\nu}\right]^{-1}\Big(&\underline{\boldsymbol{J}}^{\mathsf{T}}\left[\hat{\boldsymbol{\Lambda}}^{*}\right]\left[\hat{\boldsymbol{\lambda}}\right]\hat{\underline{\mathbf{M}}}^{*}\left[\mathbf{v}^{*}\right] + \left[\mathbf{v}^{*}\right]\hat{\underline{\mathbf{M}}}^{*\mathsf{T}}\left[\hat{\boldsymbol{\lambda}}\right]\left[\hat{\boldsymbol{\Lambda}}^{*}\right]\underline{\boldsymbol{J}} \\ &- \left[\hat{\underline{\mathbf{M}}}^{*\mathsf{T}}\left[\hat{\boldsymbol{\Lambda}}^{*}\right]\hat{\boldsymbol{\lambda}}\right]\left[\mathbf{v}^{*}\right] - \underline{\boldsymbol{J}}^{\mathsf{T}}\left[\hat{\mathbf{s}}^{lin*}\right]\left[\hat{\boldsymbol{\lambda}}\right]\left[\hat{\boldsymbol{\Lambda}}^{*}\right]\underline{\boldsymbol{J}} \\ &- \underline{\boldsymbol{J}}^{\mathsf{T}}\left[\hat{\mathbf{s}}^{lin*}\right]\left[\hat{\boldsymbol{\lambda}}\right]\left[\hat{\boldsymbol{\Lambda}}^{*}\right]\underline{\boldsymbol{J}} + \left[\hat{\underline{\mathbf{M}}}^{*\mathsf{T}}\left[\hat{\boldsymbol{\Lambda}}^{*}\right]\hat{\boldsymbol{\lambda}}\right]\left[\mathbf{v}^{*}\right]\Big)\left[\boldsymbol{\nu}\right]^{-1} \end{aligned} \tag{9.67}$$

$$= [\boldsymbol{\nu}]^{-1} \Big(2\underline{\boldsymbol{J}}^{\mathsf{T}} \left[\hat{\mathbf{s}}^{lin*} \right] [\hat{\boldsymbol{\lambda}}] [\hat{\boldsymbol{\Lambda}}^*] \underline{\boldsymbol{J}} - \underline{\boldsymbol{J}}^{\mathsf{T}} [\hat{\boldsymbol{\Lambda}}^*] [\hat{\boldsymbol{\lambda}}] \underline{\hat{\mathbf{M}}}^* [\mathbf{v}^*] - [\mathbf{v}^*] \underline{\hat{\mathbf{M}}}^{*\mathsf{T}} [\hat{\boldsymbol{\lambda}}] [\hat{\boldsymbol{\Lambda}}^*] \underline{\boldsymbol{J}} \Big) [\boldsymbol{\nu}]^{-1} \tag{9.68}$$

$$= \mathcal{M} \tag{9.69}$$

$$\hat{\mathbf{i}}^{\mathsf{S}}_{\boldsymbol{z}_r\boldsymbol{\nu}}(\hat{\boldsymbol{\lambda}}) = \frac{\partial}{\partial \boldsymbol{\nu}} \left(\hat{\mathbf{i}}^{\mathsf{S}}_{\boldsymbol{z}_r}{}^{\mathsf{T}} \hat{\boldsymbol{\lambda}} \right) \tag{9.70}$$

$$= \frac{\partial}{\partial \boldsymbol{\nu}} \left(\underline{\hat{\mathbf{N}}}^{*\mathsf{T}} [\hat{\boldsymbol{\Lambda}}^*] \hat{\boldsymbol{\lambda}} \right) \tag{9.71}$$

$$= \underline{\hat{\mathbf{N}}}^{*\mathsf{T}} [\hat{\boldsymbol{\lambda}}] \hat{\boldsymbol{\Lambda}}^*_{\boldsymbol{\nu}} \tag{9.72}$$

$$= -\underline{\hat{\mathbf{N}}}^{*\mathsf{T}} [\hat{\boldsymbol{\lambda}}] \underline{\boldsymbol{J}} [\boldsymbol{\nu}]^{-1} [\boldsymbol{\Lambda}^*] \tag{9.73}$$

$$= -\underline{\hat{\mathbf{N}}}^{*\mathsf{T}} [\hat{\boldsymbol{\lambda}}] [\hat{\boldsymbol{\Lambda}}^*] \underline{\boldsymbol{J}} [\boldsymbol{\nu}]^{-1} \tag{9.74}$$

$$= -\mathcal{N}^{\mathsf{T}} \mathcal{D} \tag{9.75}$$

$$\hat{\mathbf{i}}^{\mathsf{S}}_{\boldsymbol{z}_i\boldsymbol{\nu}}(\hat{\boldsymbol{\lambda}}) = \frac{\partial}{\partial \boldsymbol{\nu}} \left(\hat{\mathbf{i}}^{\mathsf{S}}_{\boldsymbol{z}_i}{}^{\mathsf{T}} \hat{\boldsymbol{\lambda}} \right) = -j\hat{\mathbf{i}}^{\mathsf{S}}_{\boldsymbol{z}_r\boldsymbol{\nu}}(\hat{\boldsymbol{\lambda}}) = j\mathcal{N}^{\mathsf{T}} \mathcal{D} \tag{9.76}$$

$$\hat{\mathbf{i}}^{\mathsf{S}}_{\boldsymbol{\theta}\boldsymbol{z}_r}(\hat{\boldsymbol{\lambda}}) = \frac{\partial}{\partial \boldsymbol{z}_r} \left(\hat{\mathbf{i}}^{\mathsf{S}\mathsf{T}}_{\boldsymbol{\theta}} \hat{\boldsymbol{\lambda}} \right) = \frac{\partial}{\partial \boldsymbol{z}_r} \left(j\mathcal{C}^{\mathsf{T}} \hat{\boldsymbol{\lambda}} \right) = j \frac{\partial}{\partial \boldsymbol{z}_r} \left(\mathcal{C}^{\mathsf{T}} \hat{\boldsymbol{\lambda}} \right) \tag{9.77}$$

$$= j\underline{\boldsymbol{J}}^{\mathsf{T}} [\hat{\boldsymbol{\lambda}}] [\hat{\boldsymbol{\Lambda}}^*] \underline{\hat{\mathbf{N}}}^* \tag{9.78}$$

$$= j\mathcal{N} = \hat{\mathbf{i}}^{\mathsf{S}}_{\boldsymbol{z}_r\boldsymbol{\theta}}{}^{\mathsf{T}}(\hat{\boldsymbol{\lambda}}) \tag{9.79}$$

$$\hat{\mathbf{i}}^{\mathsf{S}}_{\boldsymbol{\nu}\boldsymbol{z}_r}(\hat{\boldsymbol{\lambda}}) = \frac{\partial}{\partial \boldsymbol{z}_r} \left(\hat{\mathbf{i}}^{\mathsf{S}\mathsf{T}}_{\boldsymbol{\nu}} \hat{\boldsymbol{\lambda}} \right) = \frac{\partial}{\partial \boldsymbol{z}_r} \left(-[\boldsymbol{\nu}]^{-1} \mathcal{C}^{\mathsf{T}} \hat{\boldsymbol{\lambda}} \right) = -[\boldsymbol{\nu}]^{-1} \frac{\partial}{\partial \boldsymbol{z}_r} \left(\mathcal{C}^{\mathsf{T}} \hat{\boldsymbol{\lambda}} \right) \tag{9.80}$$

$$= -[\boldsymbol{\nu}]^{-1} \underline{\boldsymbol{J}}^{\mathsf{T}} [\hat{\boldsymbol{\lambda}}] [\hat{\boldsymbol{\Lambda}}^*] \underline{\hat{\mathbf{N}}}^* \tag{9.81}$$

$$= -\mathcal{D}\mathcal{N} = \hat{\mathbf{i}}^{\mathsf{S}}_{\boldsymbol{z}_r\boldsymbol{\nu}}{}^{\mathsf{T}}(\hat{\boldsymbol{\lambda}}) \tag{9.82}$$

$$\hat{\mathbf{i}}^{\mathsf{S}}_{\boldsymbol{\theta}\boldsymbol{z}_i}(\hat{\boldsymbol{\lambda}}) = \frac{\partial}{\partial \boldsymbol{z}_i} \left(\hat{\mathbf{i}}^{\mathsf{S}\mathsf{T}}_{\boldsymbol{\theta}} \hat{\boldsymbol{\lambda}} \right) = -j\hat{\mathbf{i}}^{\mathsf{S}}_{\boldsymbol{\theta}\boldsymbol{z}_r}(\hat{\boldsymbol{\lambda}}) = \mathcal{N} = \hat{\mathbf{i}}^{\mathsf{S}}_{\boldsymbol{z}_i\boldsymbol{\theta}}{}^{\mathsf{T}}(\hat{\boldsymbol{\lambda}}) \tag{9.83}$$

$$\hat{\mathbf{i}}^{\mathsf{S}}_{\boldsymbol{\nu}\boldsymbol{z}_i}(\hat{\boldsymbol{\lambda}}) = \frac{\partial}{\partial \boldsymbol{z}_i}\left(\hat{\mathbf{i}}^{\mathsf{S}}_{\boldsymbol{\nu}}{}^{\mathsf{T}}\hat{\boldsymbol{\lambda}}\right) = -j\hat{\mathbf{i}}^{\mathsf{S}}_{\boldsymbol{\nu}\boldsymbol{z}_r}(\hat{\boldsymbol{\lambda}}) = j\mathcal{D}\mathcal{N} = \hat{\mathbf{i}}^{\mathsf{S}}_{\boldsymbol{z}_i\boldsymbol{\nu}}{}^{\mathsf{T}}(\hat{\boldsymbol{\lambda}}) \tag{9.84}$$

$$\hat{\mathbf{i}}^{\mathsf{S}}_{\boldsymbol{z}_r\boldsymbol{z}_r}(\hat{\boldsymbol{\lambda}}) = \hat{\mathbf{i}}^{\mathsf{S}}_{\boldsymbol{z}_r\boldsymbol{z}_i}(\hat{\boldsymbol{\lambda}}) = \hat{\mathbf{i}}^{\mathsf{S}}_{\boldsymbol{z}_i\boldsymbol{z}_r}(\hat{\boldsymbol{\lambda}}) = \hat{\mathbf{i}}^{\mathsf{S}}_{\boldsymbol{z}_i\boldsymbol{z}_i}(\hat{\boldsymbol{\lambda}}) = \mathbf{0} \tag{9.85}$$

9.2 Cartesian

We define the following terms, both for notational convenience for the derivations and for computational savings during computation of the derivatives.

$$\mathcal{A} = [\hat{\boldsymbol{\Lambda}}^*]\,\underline{\hat{\mathbf{M}}}^* \tag{9.86}$$
$$\mathcal{B} = [\hat{\boldsymbol{\Lambda}}^*]\,\underline{\hat{\mathbf{N}}}^* \tag{9.87}$$
$$\mathcal{C} = \left[\hat{\mathbf{s}}^{lin*}\right][\hat{\boldsymbol{\Lambda}}^*]^2\,\underline{\boldsymbol{J}} \tag{9.88}$$
$$\mathcal{D} = \underline{\boldsymbol{J}}^{\mathsf{T}}\,[\hat{\boldsymbol{\lambda}}]\,[\hat{\boldsymbol{\Lambda}}^*] \tag{9.89}$$
$$\mathcal{E} = \mathcal{A} - \mathcal{C} \tag{9.90}$$
$$\mathcal{F} = \mathcal{D}\mathcal{E} \tag{9.91}$$
$$\mathcal{G} = -\left(\mathcal{F}^{\mathsf{T}} + \mathcal{F}\right) \tag{9.92}$$
$$\mathcal{H} = -\mathcal{D}\mathcal{B} \tag{9.93}$$

9.2.1 First Derivatives

$$\hat{\mathbf{i}}^{\mathsf{S}}_{\boldsymbol{x}} = \frac{\partial \hat{\mathbf{i}}^{\mathsf{S}}}{\partial \boldsymbol{x}} = \begin{bmatrix} \frac{@\hat{\mathbf{i}}^S}{@\boldsymbol{u}} & \frac{@\hat{\mathbf{i}}^S}{@\boldsymbol{w}} & \frac{@\hat{\mathbf{i}}^S}{@\boldsymbol{z}_r} & \frac{@\hat{\mathbf{i}}^S}{@\boldsymbol{z}_i} \end{bmatrix} \tag{9.94}$$
$$= \begin{bmatrix} \mathcal{E} & -j\mathcal{E} & \mathcal{B} & -j\mathcal{B} \end{bmatrix} \tag{9.95}$$

$$\hat{\mathbf{i}}^{\mathsf{S}}_{\boldsymbol{u}} = \frac{\partial \hat{\mathbf{i}}^{\mathsf{S}}}{\partial \boldsymbol{u}} = \left[\hat{\mathbf{s}}^{lin*}\right]\underbrace{\left(-[\hat{\boldsymbol{\Lambda}}^*]^2\,\underline{\boldsymbol{J}}\right)}_{\frac{\partial\hat{\ }^*}{\partial \boldsymbol{u}}} + [\hat{\boldsymbol{\Lambda}}^*]\underbrace{\underline{\hat{\mathbf{M}}}^*}_{\frac{\partial \hat{\mathbf{s}}^{lin*}}{\partial \boldsymbol{u}}} \tag{9.96}$$
$$= [\hat{\boldsymbol{\Lambda}}^*]\,\underline{\hat{\mathbf{M}}}^* - \left[\hat{\mathbf{s}}^{lin*}\right][\hat{\boldsymbol{\Lambda}}^*]^2\,\underline{\boldsymbol{J}} \tag{9.97}$$
$$= \mathcal{E} \tag{9.98}$$

$$\hat{\mathbf{i}}^{\mathsf{S}}_{\boldsymbol{w}} = \frac{\partial \hat{\mathbf{i}}^{\mathsf{S}}}{\partial \boldsymbol{w}} = \left[\hat{\mathbf{s}}^{lin*}\right] \underbrace{j\,[\hat{\boldsymbol{\Lambda}}^*]^2\,\underline{\boldsymbol{J}}}_{\frac{\partial \hat{\ }^*}{\partial \boldsymbol{w}}} + [\hat{\boldsymbol{\Lambda}}^*]\,\underbrace{(-j\underline{\hat{\mathbf{M}}}^*)}_{\frac{\partial \hat{\mathbf{s}}^{lin*}}{\partial \boldsymbol{w}}} \tag{9.99}$$

$$= -j\left([\hat{\boldsymbol{\Lambda}}^*]\,\underline{\hat{\mathbf{M}}}^* - \left[\hat{\mathbf{s}}^{lin*}\right][\hat{\boldsymbol{\Lambda}}^*]^2\,\underline{\boldsymbol{J}}\right) \tag{9.100}$$

$$= -j\mathcal{E} \tag{9.101}$$

$$\hat{\mathbf{i}}^{\mathsf{S}}_{\boldsymbol{z}_r} = \frac{\partial \hat{\mathbf{i}}^{\mathsf{S}}}{\partial \boldsymbol{z}_r} = \left[\hat{\mathbf{s}}^{lin*}\right] \underbrace{\mathbf{0}}_{\frac{\partial \hat{\ }^*}{\partial \boldsymbol{z}_r}} + [\hat{\boldsymbol{\Lambda}}^*]\,\underbrace{\underline{\hat{\mathbf{N}}}^*}_{\frac{\partial \hat{\mathbf{s}}^{lin*}}{\partial \boldsymbol{z}_r}} \tag{9.102}$$

$$= [\hat{\boldsymbol{\Lambda}}^*]\,\underline{\hat{\mathbf{N}}}^* \tag{9.103}$$

$$= \mathcal{B} \tag{9.104}$$

$$\hat{\mathbf{i}}^{\mathsf{S}}_{\boldsymbol{z}_i} = \frac{\partial \hat{\mathbf{i}}^{\mathsf{S}}}{\partial \boldsymbol{z}_i} = -j\hat{\mathbf{i}}^{\mathsf{S}}_{\boldsymbol{z}_r} = -j\mathcal{B} \tag{9.105}$$

9.2.2 Second Derivatives

Since $\mathbf{i}^{\mathsf{S}}_{\boldsymbol{z}_r}$ and $\mathbf{i}^{\mathsf{S}}_{\boldsymbol{z}_i}$ are constant with respect to $\boldsymbol{z}_r$ and $\boldsymbol{z}_i$, all second derivatives involving only $\boldsymbol{z}_r$ and $\boldsymbol{z}_i$ are zero. Some of the second derivatives of $\mathbf{i}^{\mathsf{S}}$ are derived using the first derivatives of $\mathcal{E}^{\mathsf{T}}\hat{\boldsymbol{\lambda}}$, which are derived first as follows.

$$\frac{\partial}{\partial \boldsymbol{u}}\left(\mathcal{E}^{\mathsf{T}}\hat{\boldsymbol{\lambda}}\right) = \frac{\partial}{\partial \boldsymbol{u}}\left(\left(\underline{\hat{\mathbf{M}}}^{*\mathsf{T}}[\hat{\boldsymbol{\Lambda}}^*] - \underline{\boldsymbol{J}}^{\mathsf{T}}\left[\hat{\mathbf{s}}^{lin*}\right][\hat{\boldsymbol{\Lambda}}^*]^2\right)\hat{\boldsymbol{\lambda}}\right) \tag{9.106}$$

$$= \frac{\partial}{\partial \boldsymbol{u}}\left(\underline{\hat{\mathbf{M}}}^{*\mathsf{T}}[\hat{\boldsymbol{\Lambda}}^*]\,\hat{\boldsymbol{\lambda}}\right) - \frac{\partial}{\partial \boldsymbol{u}}\left(\underline{\boldsymbol{J}}^{\mathsf{T}}\left[\hat{\mathbf{s}}^{lin*}\right][\hat{\boldsymbol{\Lambda}}^*]^2\,\hat{\boldsymbol{\lambda}}\right) \tag{9.107}$$

$$\begin{aligned} &= \underline{\hat{\mathbf{M}}}^{*\mathsf{T}}[\hat{\boldsymbol{\lambda}}]\,\underbrace{(-[\hat{\boldsymbol{\Lambda}}^*]^2\,\underline{\boldsymbol{J}})}_{\frac{\partial \hat{\ }^*}{\partial \boldsymbol{u}}} \\ &\quad - \underline{\boldsymbol{J}}^{\mathsf{T}}\left[\hat{\mathbf{s}}^{lin*}\right][\hat{\boldsymbol{\lambda}}]\,\underbrace{2\,[\hat{\boldsymbol{\Lambda}}^*]\,(-[\hat{\boldsymbol{\Lambda}}^*]^2\,\underline{\boldsymbol{J}})}_{\frac{\partial(\hat{\ }^*)^2}{\partial \boldsymbol{u}}} - \underline{\boldsymbol{J}}^{\mathsf{T}}[\hat{\boldsymbol{\Lambda}}^*]^2[\hat{\boldsymbol{\lambda}}]\,\underbrace{\underline{\hat{\mathbf{M}}}^*}_{\frac{\partial \hat{\mathbf{s}}^{lin*}}{\partial \boldsymbol{u}}} \end{aligned} \tag{9.108}$$

$$\begin{aligned} &= 2\underline{\boldsymbol{J}}^{\mathsf{T}}\left[\hat{\mathbf{s}}^{lin*}\right][\hat{\boldsymbol{\lambda}}][\hat{\boldsymbol{\Lambda}}^*]^3\,\underline{\boldsymbol{J}} \\ &\quad - \left(\underline{\hat{\mathbf{M}}}^{*\mathsf{T}}[\hat{\boldsymbol{\lambda}}][\hat{\boldsymbol{\Lambda}}^*]^2\,\underline{\boldsymbol{J}} + \underline{\boldsymbol{J}}^{\mathsf{T}}[\hat{\boldsymbol{\Lambda}}^*]^2[\hat{\boldsymbol{\lambda}}]\,\underline{\hat{\mathbf{M}}}^*\right) \end{aligned} \tag{9.109}$$

$$= \mathcal{G} \tag{9.110}$$

$$\frac{\partial}{\partial \boldsymbol{w}}\left(\mathcal{E}^{\mathsf{T}}\hat{\boldsymbol{\lambda}}\right) = \frac{\partial}{\partial \boldsymbol{w}}\left(\left(\underline{\hat{\mathbf{M}}}^{*\mathsf{T}}\left[\hat{\boldsymbol{\Lambda}}^{*}\right] - \underline{\boldsymbol{J}}^{\mathsf{T}}\left[\hat{\mathbf{s}}^{lin*}\right]\left[\hat{\boldsymbol{\Lambda}}^{*}\right]^{2}\right)\hat{\boldsymbol{\lambda}}\right) \tag{9.111}$$

$$= \frac{\partial}{\partial \boldsymbol{w}}\left(\underline{\hat{\mathbf{M}}}^{*\mathsf{T}}\left[\hat{\boldsymbol{\Lambda}}^{*}\right]\hat{\boldsymbol{\lambda}}\right) - \frac{\partial}{\partial \boldsymbol{w}}\left(\underline{\boldsymbol{J}}^{\mathsf{T}}\left[\hat{\mathbf{s}}^{lin*}\right]\left[\hat{\boldsymbol{\Lambda}}^{*}\right]^{2}\hat{\boldsymbol{\lambda}}\right) \tag{9.112}$$

$$= \underline{\hat{\mathbf{M}}}^{*\mathsf{T}}\left[\hat{\boldsymbol{\lambda}}\right]\underbrace{j\left[\hat{\boldsymbol{\Lambda}}^{*}\right]^{2}\underline{\boldsymbol{J}}}_{\frac{\partial \hat{\ }^{*}}{\partial \boldsymbol{w}}}$$

$$- \left[\hat{\mathbf{s}}^{lin*}\right]\left[\hat{\boldsymbol{\lambda}}\right]\underbrace{2\left[\hat{\boldsymbol{\Lambda}}^{*}\right]\left(j\left[\hat{\boldsymbol{\Lambda}}^{*}\right]^{2}\underline{\boldsymbol{J}}\right)}_{\frac{\partial(\hat{\ }^{*})^{2}}{\partial \boldsymbol{w}}} - \underline{\boldsymbol{J}}^{\mathsf{T}}\left[\hat{\boldsymbol{\Lambda}}^{*}\right]^{2}\left[\hat{\boldsymbol{\lambda}}\right]\underbrace{\left(-j\underline{\hat{\mathbf{M}}}^{*}\right)}_{\frac{\partial \hat{\mathbf{s}}^{lin*}}{\partial \boldsymbol{w}}} \tag{9.113}$$

$$= -j\left(2\underline{\boldsymbol{J}}^{\mathsf{T}}\left[\hat{\mathbf{s}}^{lin*}\right]\left[\hat{\boldsymbol{\lambda}}\right]\left[\hat{\boldsymbol{\Lambda}}^{*}\right]^{3}\underline{\boldsymbol{J}}\right.$$

$$\left. - \underline{\hat{\mathbf{M}}}^{*\mathsf{T}}\left[\hat{\boldsymbol{\lambda}}\right]\left[\hat{\boldsymbol{\Lambda}}^{*}\right]^{2}\underline{\boldsymbol{J}} - \underline{\boldsymbol{J}}^{\mathsf{T}}\left[\hat{\boldsymbol{\Lambda}}^{*}\right]^{2}\left[\hat{\boldsymbol{\lambda}}\right]\underline{\hat{\mathbf{M}}}^{*}\right) \tag{9.114}$$

$$= -j\mathcal{G} \tag{9.115}$$

$$\frac{\partial}{\partial \boldsymbol{z}_r}\left(\mathcal{E}^{\mathsf{T}}\hat{\boldsymbol{\lambda}}\right) = \frac{\partial}{\partial \boldsymbol{z}_r}\left(\left(\underline{\hat{\mathbf{M}}}^{*\mathsf{T}}\left[\hat{\boldsymbol{\Lambda}}^{*}\right] - \underline{\boldsymbol{J}}^{\mathsf{T}}\left[\hat{\mathbf{s}}^{lin*}\right]\left[\hat{\boldsymbol{\Lambda}}^{*}\right]^{2}\right)\hat{\boldsymbol{\lambda}}\right) \tag{9.116}$$

$$= -\underline{\boldsymbol{J}}^{\mathsf{T}}\frac{\partial}{\partial \boldsymbol{z}_r}\left(\left[\hat{\mathbf{s}}^{lin*}\right]\left[\hat{\boldsymbol{\Lambda}}^{*}\right]^{2}\hat{\boldsymbol{\lambda}}\right) \tag{9.117}$$

$$= -\underline{\boldsymbol{J}}^{\mathsf{T}}\left[\hat{\boldsymbol{\lambda}}\right]\left[\hat{\boldsymbol{\Lambda}}^{*}\right]^{2}\underbrace{\underline{\hat{\mathbf{N}}}^{*}}_{\frac{\partial \hat{\mathbf{s}}^{lin*}}{\partial \boldsymbol{z}_r}} \tag{9.118}$$

$$= \mathcal{H} \tag{9.119}$$

$$\frac{\partial}{\partial \boldsymbol{z}_i}\left(\mathcal{E}^{\mathsf{T}}\hat{\boldsymbol{\lambda}}\right) = -j\frac{\partial}{\partial \boldsymbol{z}_r}\left(\mathcal{E}^{\mathsf{T}}\hat{\boldsymbol{\lambda}}\right) = -j\mathcal{H} \tag{9.120}$$

The second derivatives of $\mathbf{i}^{\mathsf{S}}$ are then derived as follows.

$$\hat{\mathbf{i}}^{\mathsf{S}}_{\boldsymbol{xx}}(\hat{\boldsymbol{\lambda}}) = \frac{\partial}{\partial \boldsymbol{x}} \left(\hat{\mathbf{i}}^{\mathsf{S}}_{\boldsymbol{x}}{}^{\mathsf{T}} \hat{\boldsymbol{\lambda}} \right) \tag{9.121}$$

$$= \begin{bmatrix} \hat{\mathbf{i}}^{\mathsf{S}}_{\boldsymbol{uu}}(\hat{\boldsymbol{\lambda}}) & \hat{\mathbf{i}}^{\mathsf{S}}_{\boldsymbol{uw}}(\hat{\boldsymbol{\lambda}}) & \hat{\mathbf{i}}^{\mathsf{S}}_{\boldsymbol{uz}_r}(\hat{\boldsymbol{\lambda}}) & \hat{\mathbf{i}}^{\mathsf{S}}_{\boldsymbol{uz}_i}(\hat{\boldsymbol{\lambda}}) \\ \hat{\mathbf{i}}^{\mathsf{S}}_{\boldsymbol{wu}}(\hat{\boldsymbol{\lambda}}) & \hat{\mathbf{i}}^{\mathsf{S}}_{\boldsymbol{ww}}(\hat{\boldsymbol{\lambda}}) & \hat{\mathbf{i}}^{\mathsf{S}}_{\boldsymbol{wz}_r}(\hat{\boldsymbol{\lambda}}) & \hat{\mathbf{i}}^{\mathsf{S}}_{\boldsymbol{wz}_i}(\hat{\boldsymbol{\lambda}}) \\ \hat{\mathbf{i}}^{\mathsf{S}}_{\boldsymbol{z}_r\boldsymbol{u}}(\hat{\boldsymbol{\lambda}}) & \hat{\mathbf{i}}^{\mathsf{S}}_{\boldsymbol{z}_r\boldsymbol{w}}(\hat{\boldsymbol{\lambda}}) & \mathbf{0} & \mathbf{0} \\ \hat{\mathbf{i}}^{\mathsf{S}}_{\boldsymbol{z}_i\boldsymbol{u}}(\hat{\boldsymbol{\lambda}}) & \hat{\mathbf{i}}^{\mathsf{S}}_{\boldsymbol{z}_i\boldsymbol{w}}(\hat{\boldsymbol{\lambda}}) & \mathbf{0} & \mathbf{0} \end{bmatrix} \tag{9.122}$$

$$= \begin{bmatrix} \mathcal{G} & -j\mathcal{G} & \mathcal{H} & -j\mathcal{H} \\ -j\mathcal{G} & -\mathcal{G} & -j\mathcal{H} & -\mathcal{H} \\ \mathcal{H}^{\mathsf{T}} & -j\mathcal{H}^{\mathsf{T}} & \mathbf{0} & \mathbf{0} \\ -j\mathcal{H}^{\mathsf{T}} & -\mathcal{H}^{\mathsf{T}} & \mathbf{0} & \mathbf{0} \end{bmatrix} \tag{9.123}$$

$$\hat{\mathbf{i}}^{\mathsf{S}}_{\boldsymbol{uu}}(\hat{\boldsymbol{\lambda}}) = \frac{\partial}{\partial \boldsymbol{u}} \left(\hat{\mathbf{i}}^{\mathsf{S}}_{\boldsymbol{u}}{}^{\mathsf{T}} \hat{\boldsymbol{\lambda}} \right) = \frac{\partial}{\partial \boldsymbol{u}} \left(\mathcal{E}^{\mathsf{T}} \hat{\boldsymbol{\lambda}} \right) \tag{9.124}$$

$$= \mathcal{G} \tag{9.125}$$

$$\hat{\mathbf{i}}^{\mathsf{S}}_{\boldsymbol{wu}}(\hat{\boldsymbol{\lambda}}) = \frac{\partial}{\partial \boldsymbol{u}} \left(\hat{\mathbf{i}}^{\mathsf{S}}_{\boldsymbol{w}}{}^{\mathsf{T}} \hat{\boldsymbol{\lambda}} \right) = -j\hat{\mathbf{i}}^{\mathsf{S}}_{\boldsymbol{uu}}(\hat{\boldsymbol{\lambda}}) = -j\mathcal{G} \tag{9.126}$$

$$\hat{\mathbf{i}}^{\mathsf{S}}_{\boldsymbol{z}_r\boldsymbol{u}}(\hat{\boldsymbol{\lambda}}) = \frac{\partial}{\partial \boldsymbol{u}} \left(\hat{\mathbf{i}}^{\mathsf{S}}_{\boldsymbol{z}_r}{}^{\mathsf{T}} \hat{\boldsymbol{\lambda}} \right) = \frac{\partial}{\partial \boldsymbol{u}} \left(\mathcal{B}^{\mathsf{T}} \hat{\boldsymbol{\lambda}} \right) \tag{9.127}$$

$$= \frac{\partial}{\partial \boldsymbol{u}} \left(\hat{\underline{\mathbf{N}}}^{*\mathsf{T}} \left[\hat{\boldsymbol{\Lambda}}^{*} \right] \hat{\boldsymbol{\lambda}} \right) \tag{9.128}$$

$$= \hat{\underline{\mathbf{N}}}^{*\mathsf{T}} \left[\hat{\boldsymbol{\lambda}} \right] \underbrace{\left(- \left[\hat{\boldsymbol{\Lambda}}^{*} \right]^2 \underline{\boldsymbol{J}} \right)}_{\frac{\partial \hat{\ }^{*}}{\partial \boldsymbol{u}}} \tag{9.129}$$

$$= -\hat{\underline{\mathbf{N}}}^{*\mathsf{T}} \left[\hat{\boldsymbol{\Lambda}}^{*} \right]^2 \left[\hat{\boldsymbol{\lambda}} \right] \underline{\boldsymbol{J}} \tag{9.130}$$

$$= \mathcal{H}^{\mathsf{T}} \tag{9.131}$$

$$\hat{\mathbf{i}}^{\mathsf{S}}_{\boldsymbol{z}_i\boldsymbol{u}}(\hat{\boldsymbol{\lambda}}) = \frac{\partial}{\partial \boldsymbol{u}} \left(\hat{\mathbf{i}}^{\mathsf{S}}_{\boldsymbol{z}_i}{}^{\mathsf{T}} \hat{\boldsymbol{\lambda}} \right) = -j\hat{\mathbf{i}}^{\mathsf{S}}_{\boldsymbol{z}_r\boldsymbol{u}}(\hat{\boldsymbol{\lambda}}) = -j\mathcal{H}^{\mathsf{T}} \tag{9.132}$$

$$\hat{\mathbf{i}}^{\mathsf{S}}_{\boldsymbol{uw}}(\hat{\boldsymbol{\lambda}}) = \frac{\partial}{\partial \boldsymbol{w}}\left(\hat{\mathbf{i}}^{\mathsf{S}}_{\boldsymbol{u}}{}^{\mathsf{T}}\hat{\boldsymbol{\lambda}}\right) = \frac{\partial}{\partial \boldsymbol{w}}\left(\mathcal{E}^{\mathsf{T}}\hat{\boldsymbol{\lambda}}\right) \tag{9.133}$$

$$= -j\mathcal{G} \tag{9.134}$$

$$\hat{\mathbf{i}}^{\mathsf{S}}_{\boldsymbol{ww}}(\hat{\boldsymbol{\lambda}}) = \frac{\partial}{\partial \boldsymbol{w}}\left(\hat{\mathbf{i}}^{\mathsf{S}}_{\boldsymbol{w}}{}^{\mathsf{T}}\hat{\boldsymbol{\lambda}}\right) = -j\hat{\mathbf{i}}^{\mathsf{S}}_{\boldsymbol{uw}}(\hat{\boldsymbol{\lambda}}) = -\mathcal{G} \tag{9.135}$$

$$\hat{\mathbf{i}}^{\mathsf{S}}_{\boldsymbol{z}_r\boldsymbol{w}}(\hat{\boldsymbol{\lambda}}) = \frac{\partial}{\partial \boldsymbol{w}}\left(\hat{\mathbf{i}}^{\mathsf{S}}_{\boldsymbol{z}_r}{}^{\mathsf{T}}\hat{\boldsymbol{\lambda}}\right) = \frac{\partial}{\partial \boldsymbol{w}}\left(\mathcal{B}^{\mathsf{T}}\hat{\boldsymbol{\lambda}}\right) \tag{9.136}$$

$$= \frac{\partial}{\partial \boldsymbol{w}}\left(\hat{\underline{\mathbf{N}}}^{*\mathsf{T}}\left[\hat{\boldsymbol{\Lambda}}^{*}\right]\hat{\boldsymbol{\lambda}}\right) \tag{9.137}$$

$$= \hat{\underline{\mathbf{N}}}^{*\mathsf{T}}\left[\hat{\boldsymbol{\lambda}}\right]\underbrace{j\left[\hat{\boldsymbol{\Lambda}}^{*}\right]^2\underline{\boldsymbol{J}}}_{\frac{\partial \hat{\ }^{*}}{\partial \boldsymbol{w}}} \tag{9.138}$$

$$= j\hat{\underline{\mathbf{N}}}^{*\mathsf{T}}\left[\hat{\boldsymbol{\lambda}}\right]\left[\hat{\boldsymbol{\Lambda}}^{*}\right]^2\underline{\boldsymbol{J}} \tag{9.139}$$

$$= -j\mathcal{H}^{\mathsf{T}} \tag{9.140}$$

$$\hat{\mathbf{i}}^{\mathsf{S}}_{\boldsymbol{z}_i\boldsymbol{w}}(\hat{\boldsymbol{\lambda}}) = \frac{\partial}{\partial \boldsymbol{w}}\left(\hat{\mathbf{i}}^{\mathsf{S}}_{\boldsymbol{z}_i}{}^{\mathsf{T}}\hat{\boldsymbol{\lambda}}\right) = -j\hat{\mathbf{i}}^{\mathsf{S}}_{\boldsymbol{z}_r\boldsymbol{w}}(\hat{\boldsymbol{\lambda}}) = -\mathcal{H}^{\mathsf{T}} \tag{9.141}$$

$$\hat{\mathbf{i}}^{\mathsf{S}}_{\boldsymbol{u}\boldsymbol{z}_r}(\hat{\boldsymbol{\lambda}}) = \frac{\partial}{\partial \boldsymbol{z}_r}\left(\hat{\mathbf{i}}^{\mathsf{S}}_{\boldsymbol{u}}{}^{\mathsf{T}}\hat{\boldsymbol{\lambda}}\right) = \frac{\partial}{\partial \boldsymbol{z}_r}\left(\mathcal{E}^{\mathsf{T}}\hat{\boldsymbol{\lambda}}\right) \tag{9.142}$$

$$= \mathcal{H} = \hat{\mathbf{i}}^{\mathsf{S}}_{\boldsymbol{z}_r\boldsymbol{u}}{}^{\mathsf{T}}(\hat{\boldsymbol{\lambda}}) \tag{9.143}$$

$$\hat{\mathbf{i}}^{\mathsf{S}}_{\boldsymbol{w}\boldsymbol{z}_r}(\hat{\boldsymbol{\lambda}}) = \frac{\partial}{\partial \boldsymbol{z}_r}\left(\hat{\mathbf{i}}^{\mathsf{S}}_{\boldsymbol{w}}{}^{\mathsf{T}}\hat{\boldsymbol{\lambda}}\right) = -j\hat{\mathbf{i}}^{\mathsf{S}}_{\boldsymbol{u}\boldsymbol{z}_r}(\hat{\boldsymbol{\lambda}}) = -j\mathcal{H} = \hat{\mathbf{i}}^{\mathsf{S}}_{\boldsymbol{z}_r\boldsymbol{w}}{}^{\mathsf{T}}(\hat{\boldsymbol{\lambda}}) \tag{9.144}$$

$$\hat{\mathbf{i}}^{\mathsf{S}}_{\boldsymbol{u}\boldsymbol{z}_i}(\hat{\boldsymbol{\lambda}}) = \frac{\partial}{\partial \boldsymbol{z}_i}\left(\hat{\mathbf{i}}^{\mathsf{S}}_{\boldsymbol{u}}{}^{\mathsf{T}}\hat{\boldsymbol{\lambda}}\right) = -j\hat{\mathbf{i}}^{\mathsf{S}}_{\boldsymbol{u}\boldsymbol{z}_r}(\hat{\boldsymbol{\lambda}}) = -j\mathcal{H} = \hat{\mathbf{i}}^{\mathsf{S}}_{\boldsymbol{z}_i\boldsymbol{u}}{}^{\mathsf{T}}(\hat{\boldsymbol{\lambda}}) \tag{9.145}$$

$$\hat{\mathbf{i}}^{\mathsf{S}}_{\boldsymbol{w}\boldsymbol{z}_i}(\hat{\boldsymbol{\lambda}}) = \frac{\partial}{\partial \boldsymbol{z}_i}\left(\hat{\mathbf{i}}^{\mathsf{S}}_{\boldsymbol{w}}{}^{\mathsf{T}}\hat{\boldsymbol{\lambda}}\right) = -j\hat{\mathbf{i}}^{\mathsf{S}}_{\boldsymbol{w}\boldsymbol{z}_r}(\hat{\boldsymbol{\lambda}}) = -\mathcal{H} = \hat{\mathbf{i}}^{\mathsf{S}}_{\boldsymbol{z}_i\boldsymbol{w}}{}^{\mathsf{T}}(\hat{\boldsymbol{\lambda}}) \tag{9.146}$$

$$\hat{\mathbf{i}}^{\mathsf{S}}_{\boldsymbol{z}_r\boldsymbol{z}_r}(\hat{\boldsymbol{\lambda}}) = \hat{\mathbf{i}}^{\mathsf{S}}_{\boldsymbol{z}_r\boldsymbol{z}_i}(\hat{\boldsymbol{\lambda}}) = \hat{\mathbf{i}}^{\mathsf{S}}_{\boldsymbol{z}_i\boldsymbol{z}_r}(\hat{\boldsymbol{\lambda}}) = \hat{\mathbf{i}}^{\mathsf{S}}_{\boldsymbol{z}_i\boldsymbol{z}_i}(\hat{\boldsymbol{\lambda}}) = \mathbf{0} \tag{9.147}$$

10 Square of Complex Port Injections

For a complex port injection function $\mathbf{g}(\boldsymbol{x})$, representing the complex power or complex current injections, let $\boldsymbol{h}(\boldsymbol{x})$ represent the squared magnitudes of the injections.

$$\boldsymbol{h}(\boldsymbol{x}) = [\mathbf{g}(\boldsymbol{x})]^* \mathbf{g}(\boldsymbol{x}) \tag{10.1}$$

The derivatives of $\boldsymbol{h}$ can then be expressed in terms of the derivatives of $\mathbf{g}$ as follows.

10.1 First Derivatives

$$\begin{aligned}
\boldsymbol{h}_{\boldsymbol{x}} &= [\mathbf{g}^*]\, \mathbf{g}_{\boldsymbol{x}} + [\mathbf{g}]\, \mathbf{g}_{\boldsymbol{x}}{}^* && (10.2)\\
&= [\mathbf{g}^*]\, \mathbf{g}_{\boldsymbol{x}} + ([\mathbf{g}^*]\, \mathbf{g}_{\boldsymbol{x}})^* && (10.3)\\
&= 2 \cdot \Re\{[\mathbf{g}^*]\, \mathbf{g}_{\boldsymbol{x}}\} && (10.4)\\
&= 2 \cdot (\Re\{[\mathbf{g}]\}\Re\{\mathbf{g}_{\boldsymbol{x}}\} + \Im\{[\mathbf{g}]\}\Im\{\mathbf{g}_{\boldsymbol{x}}\}) && (10.5)
\end{aligned}$$

10.2 Second Derivatives

$$\begin{aligned}
\boldsymbol{h}_{\boldsymbol{xx}}(\boldsymbol{\mu}) &= \frac{\partial}{\partial \boldsymbol{x}} \left(\boldsymbol{h}_{\boldsymbol{x}}{}^{\mathsf{T}} \boldsymbol{\mu}\right) && (10.6)\\
&= \frac{\partial}{\partial \boldsymbol{x}} \left(\mathbf{g}_{\boldsymbol{x}}{}^{\mathsf{T}} [\mathbf{g}^*]\, \boldsymbol{\mu} + \mathbf{g}_{\boldsymbol{x}}{}^{*\mathsf{T}} [\mathbf{g}]\, \boldsymbol{\mu}\right) && (10.7)\\
&= \mathbf{g}_{\boldsymbol{xx}}([\mathbf{g}^*]\, \boldsymbol{\mu}) + \mathbf{g}_{\boldsymbol{x}}{}^{\mathsf{T}} [\boldsymbol{\mu}]\, \mathbf{g}_{\boldsymbol{x}}{}^* + \mathbf{g}_{\boldsymbol{xx}}{}^*([\mathbf{g}]\, \boldsymbol{\mu}) + \mathbf{g}_{\boldsymbol{x}}{}^{*\mathsf{T}} [\boldsymbol{\mu}]\, \mathbf{g}_{\boldsymbol{x}} && (10.8)\\
&= 2 \cdot \Re\left\{\mathbf{g}_{\boldsymbol{xx}}([\mathbf{g}^*]\, \boldsymbol{\mu}) + \mathbf{g}_{\boldsymbol{x}}{}^{\mathsf{T}} [\boldsymbol{\mu}]\, \mathbf{g}_{\boldsymbol{x}}{}^*\right\} && (10.9)
\end{aligned}$$

11 Square of Real Port Injections

For a real port injection function $\boldsymbol{g}(\boldsymbol{x})$, representing the real power injections, let $\boldsymbol{h}(\boldsymbol{x})$ represent the square of the injections.

$$\boldsymbol{h}(\boldsymbol{x}) = [\boldsymbol{g}(\boldsymbol{x})]\, \boldsymbol{g}(\boldsymbol{x}) \tag{11.1}$$

The derivatives of $\boldsymbol{h}$ can then be expressed in terms of the derivatives of $\boldsymbol{g}$ as follows.

11.1 First Derivatives

$$\boldsymbol{h}_{\boldsymbol{x}} = 2\,[\boldsymbol{g}]\, \boldsymbol{g}_{\boldsymbol{x}} \tag{11.2}$$

11.2 Second Derivatives

$$\begin{aligned}
\boldsymbol{h}_{\boldsymbol{x}\boldsymbol{x}}(\boldsymbol{\mu}) &= \frac{\partial}{\partial \boldsymbol{x}} \left(\boldsymbol{h}_{\boldsymbol{x}}{}^{\mathsf{T}} \boldsymbol{\mu} \right) && (11.3)\\
&= \frac{\partial}{\partial \boldsymbol{x}} \left(2\boldsymbol{g}_{\boldsymbol{x}}{}^{\mathsf{T}}\, [\boldsymbol{g}]\, \boldsymbol{\mu} \right) && (11.4)\\
&= 2 \left(\boldsymbol{g}_{\boldsymbol{x}\boldsymbol{x}}([\boldsymbol{g}]\, \boldsymbol{\mu}) + \boldsymbol{g}_{\boldsymbol{x}}{}^{\mathsf{T}}\, [\boldsymbol{\mu}]\, \boldsymbol{g}_{\boldsymbol{x}} \right) && (11.5)
\end{aligned}$$

12 Node Balance Constraints

12.1 AC Model

For the AC model, the standard KCL or node balance constraints are expressed as a complex vector equality in the following form.

$$\mathbf{g}^{\mathrm{kcl}}(\boldsymbol{x}) = \mathbf{0} \tag{12.1}$$

If only a subset, indexed by $\boldsymbol{k}_1$, of the node balance constraints are needed, let $\underline{\boldsymbol{J}}_{\boldsymbol{k}_1}$ be the corresponding matrix (see Section 2.2) used to select the constraints of interest, and let $\underline{\boldsymbol{J}}_{\boldsymbol{k}_2}$ be used to select the corresponding ports of the aggregate model as represented by $\mathbf{g}^{\mathsf{S}}$ and $\mathbf{g}^{\mathsf{I}}$. That is, $\boldsymbol{k}_2$ is a vector containing the index of each column of $\underline{\boldsymbol{C}}$ with a non-zero in any row in $\boldsymbol{k}_1$. Then we can define the following.

$$\hat{\mathbf{g}}^{\mathrm{kcl}}(\boldsymbol{x}) = \underline{\boldsymbol{J}}_{\boldsymbol{k}_1}\mathbf{g}^{\mathrm{kcl}}(\boldsymbol{x}) \tag{12.2}$$

$$\hat{\underline{\boldsymbol{C}}} = \underline{\boldsymbol{J}}_{\boldsymbol{k}_1}\underline{\boldsymbol{C}}\underline{\boldsymbol{J}}_{\boldsymbol{k}_2}{}^{\mathsf{T}} \tag{12.3}$$

$$\hat{\mathbf{g}}^{\mathsf{S}}(\boldsymbol{x}) = \underline{\boldsymbol{J}}_{\boldsymbol{k}_2}\mathbf{g}^{\mathsf{S}}(\boldsymbol{x}) \qquad \hat{\mathbf{g}}^{\mathsf{S};\mathrm{sys}}(\boldsymbol{x}) = \underline{\boldsymbol{J}}_{\boldsymbol{k}_2}\mathbf{g}^{\mathsf{S};\mathrm{sys}}(\boldsymbol{x}) \tag{12.4}$$

$$\hat{\mathbf{g}}^{\mathsf{I}}(\boldsymbol{x}) = \underline{\boldsymbol{J}}_{\boldsymbol{k}_2}\mathbf{g}^{\mathsf{I}}(\boldsymbol{x}) \qquad \hat{\mathbf{g}}^{\mathsf{I};\mathrm{sys}}(\boldsymbol{x}) = \underline{\boldsymbol{J}}_{\boldsymbol{k}_2}\mathbf{g}^{\mathsf{I};\mathrm{sys}}(\boldsymbol{x}) \tag{12.5}$$

12.1.1 Power Balance

For complex power balance, $\mathbf{g}^{\mathrm{kcl}}(\boldsymbol{x})$ and its derivatives are defined from (4.24)–(4.31) in terms of $\mathbf{g}^{\mathsf{S};\mathrm{sys}}$ or $\mathbf{g}^{\mathsf{S}}$ using the aggregate model for the entire system.

$$\mathbf{g}^{\mathrm{kcl}}(\boldsymbol{x}) = \underline{\boldsymbol{C}}\mathbf{g}^{\mathsf{S};\mathrm{sys}}(\boldsymbol{x}) = \underline{\boldsymbol{C}}\mathbf{g}^{\mathsf{S}}(\underline{\boldsymbol{A}}'^{\mathsf{T}}\boldsymbol{x}) \tag{12.6}$$

And for only selected constraints of interest, we have the following.

$$\hat{\mathbf{g}}^{\mathrm{kcl}}(\boldsymbol{x}) = \hat{\underline{\boldsymbol{C}}}\hat{\mathbf{g}}^{\mathsf{S};\mathrm{sys}}(\boldsymbol{x}) = \hat{\underline{\boldsymbol{C}}}\hat{\mathbf{g}}^{\mathsf{S}}(\underline{\boldsymbol{A}}'^{\mathsf{T}}\boldsymbol{x}) \tag{12.7}$$

$$\hat{\mathbf{g}}^{\mathrm{kcl}}_{\boldsymbol{x}} = \hat{\underline{\boldsymbol{C}}}\hat{\mathbf{g}}^{\mathsf{S};\mathrm{sys}}_{\boldsymbol{x}} = \hat{\underline{\boldsymbol{C}}}\hat{\mathbf{g}}^{\mathsf{S}}_{\boldsymbol{x}}\underline{\boldsymbol{A}}'^{\mathsf{T}} \tag{12.8}$$

$$= \hat{\underline{\boldsymbol{C}}}\left(\hat{\mathbf{s}}^{\mathsf{I}}_{\boldsymbol{x}} + \hat{\mathbf{s}}^{\mathsf{lin}}_{\boldsymbol{x}} + \hat{\mathbf{s}}^{\mathsf{nln}}_{\boldsymbol{x}}\right)\underline{\boldsymbol{A}}'^{\mathsf{T}} \tag{12.9}$$

$$\hat{\mathbf{g}}^{\mathrm{kcl}}_{\boldsymbol{xx}}(\hat{\boldsymbol{\lambda}}) = \hat{\mathbf{g}}^{\mathsf{S};\mathrm{sys}}_{\boldsymbol{xx}}(\hat{\underline{\boldsymbol{C}}}^{\mathsf{T}}\hat{\boldsymbol{\lambda}}) = \underline{\boldsymbol{A}}'\hat{\mathbf{g}}^{\mathsf{S}}_{\boldsymbol{xx}}(\hat{\underline{\boldsymbol{C}}}^{\mathsf{T}}\hat{\boldsymbol{\lambda}})\underline{\boldsymbol{A}}'^{\mathsf{T}} \tag{12.10}$$

$$= \underline{\boldsymbol{A}}'\left(\hat{\mathbf{s}}^{\mathsf{I}}_{\boldsymbol{xx}}(\hat{\underline{\boldsymbol{C}}}^{\mathsf{T}}\hat{\boldsymbol{\lambda}}) + \hat{\mathbf{s}}^{\mathsf{lin}}_{\boldsymbol{xx}}(\hat{\underline{\boldsymbol{C}}}^{\mathsf{T}}\hat{\boldsymbol{\lambda}}) + \hat{\mathbf{s}}^{\mathsf{nln}}_{\boldsymbol{xx}}(\hat{\underline{\boldsymbol{C}}}^{\mathsf{T}}\hat{\boldsymbol{\lambda}})\right)\underline{\boldsymbol{A}}'^{\mathsf{T}} \tag{12.11}$$

12.1.2 Current Balance

For complex current balance, $\mathbf{g}^{\mathrm{kcl}}(\boldsymbol{x})$ and its derivatives are defined from (4.32)–(4.39) in terms of $\mathbf{g}^{l;\mathrm{sys}}$ or $\mathbf{g}^{l}$ using the aggregate model for the entire system.

$$\mathbf{g}^{\mathrm{kcl}}(\boldsymbol{x}) = \underline{\boldsymbol{C}}\mathbf{g}^{l;\mathrm{sys}}(\boldsymbol{x}) = \underline{\boldsymbol{C}}\mathbf{g}^{l}(\underline{\boldsymbol{A}}'^{\mathsf{T}}\boldsymbol{x}) \tag{12.12}$$

And for only selected constraints of interest, we have the following.

$$\hat{\mathbf{g}}^{\mathrm{kcl}}(\boldsymbol{x}) = \underline{\hat{\boldsymbol{C}}}\hat{\mathbf{g}}^{l;\mathrm{sys}}(\boldsymbol{x}) = \underline{\hat{\boldsymbol{C}}}\hat{\mathbf{g}}^{l}(\underline{\boldsymbol{A}}'^{\mathsf{T}}\boldsymbol{x}) \tag{12.13}$$

$$\hat{\mathbf{g}}^{\mathrm{kcl}}_{\boldsymbol{x}} = \underline{\hat{\boldsymbol{C}}}\hat{\mathbf{g}}^{l;\mathrm{sys}}_{\boldsymbol{x}} = \underline{\hat{\boldsymbol{C}}}\hat{\mathbf{g}}^{l}_{\boldsymbol{x}}\underline{\boldsymbol{A}}'^{\mathsf{T}} \tag{12.14}$$

$$= \underline{\hat{\boldsymbol{C}}}\left(\hat{\mathbf{i}}^{lin}_{\boldsymbol{x}} + \hat{\mathbf{i}}^{S}_{\boldsymbol{x}} + \hat{\mathbf{i}}^{nln}_{\boldsymbol{x}}\right)\underline{\boldsymbol{A}}'^{\mathsf{T}} \tag{12.15}$$

$$\hat{\mathbf{g}}^{\mathrm{kcl}}_{\boldsymbol{xx}}(\hat{\boldsymbol{\lambda}}) = \hat{\mathbf{g}}^{l;\mathrm{sys}}_{\boldsymbol{xx}}(\underline{\hat{\boldsymbol{C}}}^{\mathsf{T}}\hat{\boldsymbol{\lambda}}) = \underline{\boldsymbol{A}}'\hat{\mathbf{g}}^{l}_{\boldsymbol{xx}}(\underline{\hat{\boldsymbol{C}}}^{\mathsf{T}}\hat{\boldsymbol{\lambda}})\underline{\boldsymbol{A}}'^{\mathsf{T}} \tag{12.16}$$

$$= \underline{\boldsymbol{A}}'\left(\hat{\mathbf{i}}^{lin}_{\boldsymbol{xx}}(\underline{\hat{\boldsymbol{C}}}^{\mathsf{T}}\hat{\boldsymbol{\lambda}}) + \hat{\mathbf{i}}^{S}_{\boldsymbol{xx}}(\underline{\hat{\boldsymbol{C}}}^{\mathsf{T}}\hat{\boldsymbol{\lambda}}) + \hat{\mathbf{i}}^{nln}_{\boldsymbol{xx}}(\underline{\hat{\boldsymbol{C}}}^{\mathsf{T}}\hat{\boldsymbol{\lambda}})\right)\underline{\boldsymbol{A}}'^{\mathsf{T}} \tag{12.17}$$

12.2 DC Model

For the DC model, the standard KCL or node balance constraints are expressed as a real vector equality in the following form.

$$\boldsymbol{g}^{\mathrm{kcl}}(\boldsymbol{x}) = \mathbf{0} \tag{12.18}$$

The real power balance function, $\boldsymbol{g}^{\mathrm{kcl}}(\boldsymbol{x})$ and its derivatives are defined from (4.40)–(4.43) in terms of $\boldsymbol{g}^{P;\mathrm{sys}}$ or $\boldsymbol{g}^{P}$ using the aggregate model for the entire system.

$$\boldsymbol{g}^{\mathrm{kcl}}(\boldsymbol{x}) = \underline{\boldsymbol{C}}\boldsymbol{g}^{P;\mathrm{sys}}(\boldsymbol{x}) = \underline{\boldsymbol{C}}\boldsymbol{g}^{P}(\underline{\boldsymbol{A}}^{\mathsf{T}}\boldsymbol{x}) \tag{12.19}$$

And for only selected constraints of interest, we have the following.

$$\hat{\boldsymbol{g}}^{\mathrm{kcl}}(\boldsymbol{x}) = \underline{\hat{\boldsymbol{C}}}\hat{\boldsymbol{g}}^{P;\mathrm{sys}}(\boldsymbol{x}) = \underline{\hat{\boldsymbol{C}}}\hat{\boldsymbol{g}}^{P}(\underline{\boldsymbol{A}}^{\mathsf{T}}\boldsymbol{x}) \tag{12.20}$$

$$\hat{\boldsymbol{g}}^{\mathrm{kcl}}_{\boldsymbol{x}} = \underline{\hat{\boldsymbol{C}}}\hat{\boldsymbol{g}}^{P;\mathrm{sys}}_{\boldsymbol{x}} = \underline{\hat{\boldsymbol{C}}}\hat{\boldsymbol{g}}^{P}_{\boldsymbol{x}}\underline{\boldsymbol{A}}^{\mathsf{T}} \tag{12.21}$$

$$= \underline{\hat{\boldsymbol{C}}}\boldsymbol{J}_{\boldsymbol{k}_2}\left[\begin{array}{cc}\underline{\boldsymbol{B}\boldsymbol{C}}^{\mathsf{T}} & \underline{\boldsymbol{K}\boldsymbol{D}}^{\mathsf{T}}\end{array}\right] \tag{12.22}$$

$$= \underline{\hat{\boldsymbol{C}}}\left[\begin{array}{cc}\underline{\hat{\boldsymbol{B}}\boldsymbol{C}}^{\mathsf{T}} & \underline{\hat{\boldsymbol{K}}\boldsymbol{D}}^{\mathsf{T}}\end{array}\right] \tag{12.23}$$

$$= 2\underline{\boldsymbol{A}}'\Re\left\{\hat{\mathbf{g}}^{S}_{\boldsymbol{xx}}\left(\left[\hat{\mathbf{g}}^{S}(\underline{\boldsymbol{A}}'^{\mathsf{T}}\boldsymbol{x})\right]^{*}\boldsymbol{\mu}\right) + \hat{\mathbf{g}}^{S\mathsf{T}}_{\boldsymbol{x}}\left[\boldsymbol{\mu}\right]\hat{\mathbf{g}}^{S*}_{\boldsymbol{x}}\right\}\underline{\boldsymbol{A}}'^{\mathsf{T}} \tag{13.13}$$

13.1.2 Squared Current Magnitude

Let $\mathbf{h}(\boldsymbol{x})$ be the complex current port injection function from (4.32)–(4.39) based on $\mathbf{g}^{l;\text{sys}}$ or $\mathbf{g}^{l}$, with its derivatives.

$$\mathbf{h}(\boldsymbol{x}) = \hat{\mathbf{g}}^{l;\text{sys}}(\boldsymbol{x}) = \hat{\mathbf{g}}^{l}(\underline{\boldsymbol{A}}'^{\mathsf{T}}\boldsymbol{x}) \tag{13.14}$$

$$= \hat{\mathbf{i}}^{lin}(\underline{\boldsymbol{A}}'^{\mathsf{T}}\boldsymbol{x}) + \hat{\mathbf{i}}^{S}(\underline{\boldsymbol{A}}'^{\mathsf{T}}\boldsymbol{x}) + \hat{\mathbf{i}}^{nln}(\underline{\boldsymbol{A}}'^{\mathsf{T}}\boldsymbol{x}) \tag{13.15}$$

$$\mathbf{h}_{\boldsymbol{x}} = \hat{\mathbf{g}}^{l;\text{sys}}_{\boldsymbol{x}} = \hat{\mathbf{g}}^{l}_{\boldsymbol{x}}\underline{\boldsymbol{A}}'^{\mathsf{T}} \tag{13.16}$$

$$= \left(\hat{\mathbf{i}}^{lin}_{\boldsymbol{x}} + \hat{\mathbf{i}}^{S}_{\boldsymbol{x}} + \hat{\mathbf{i}}^{nln}_{\boldsymbol{x}}\right)\underline{\boldsymbol{A}}'^{\mathsf{T}} \tag{13.17}$$

$$\mathbf{h}_{\boldsymbol{xx}}(\boldsymbol{\mu}) = \hat{\mathbf{g}}^{l;\text{sys}}_{\boldsymbol{xx}}(\boldsymbol{\mu}) = \underline{\boldsymbol{A}}'\hat{\mathbf{g}}^{l}_{\boldsymbol{xx}}(\boldsymbol{\mu})\underline{\boldsymbol{A}}'^{\mathsf{T}} \tag{13.18}$$

$$= \underline{\boldsymbol{A}}'\left(\hat{\mathbf{i}}^{lin}_{\boldsymbol{xx}}(\boldsymbol{\mu}) + \hat{\mathbf{i}}^{S}_{\boldsymbol{xx}}(\boldsymbol{\mu}) + \hat{\mathbf{i}}^{nln}_{\boldsymbol{xx}}(\boldsymbol{\mu})\right)\underline{\boldsymbol{A}}'^{\mathsf{T}} \tag{13.19}$$

Then, based on (10.1)–(10.9), the squared current magnitude constraint and its derivatives can be written in terms of $\mathbf{h}$ as follows, where $\underline{\boldsymbol{f}}_{\text{max}}$ is the vector of specifed current magnitude limits.

$$\boldsymbol{h}^{\text{flow}}(\boldsymbol{x}) = [\mathbf{h}(\boldsymbol{x})]^{*}\mathbf{h}(\boldsymbol{x}) - \hat{\underline{\boldsymbol{f}}}^{2}_{\text{max}} \tag{13.20}$$

$$= \left[\hat{\mathbf{g}}^{l}(\underline{\boldsymbol{A}}'^{\mathsf{T}}\boldsymbol{x})\right]^{*}\hat{\mathbf{g}}^{l}(\underline{\boldsymbol{A}}'^{\mathsf{T}}\boldsymbol{x}) - \hat{\underline{\boldsymbol{f}}}^{2}_{\text{max}} \tag{13.21}$$

$$\boldsymbol{h}^{\text{flow}}_{\boldsymbol{x}} = 2\left(\Re\{[\mathbf{h}]\}\Re\{\mathbf{h}_{\mathsf{x}}\} + \Im\{[\mathbf{h}]\}\Im\{\mathbf{h}_{\mathsf{x}}\}\right) \tag{13.22}$$

$$= 2\left(\left[\Re\left\{\hat{\mathbf{g}}^{l}(\underline{\boldsymbol{A}}'^{\mathsf{T}}\boldsymbol{x})\right\}\right]\Re\{\hat{\mathbf{g}}^{l}_{\boldsymbol{x}}\} + \left[\Im\left\{\hat{\mathbf{g}}^{l}(\underline{\boldsymbol{A}}'^{\mathsf{T}}\boldsymbol{x})\right\}\right]\Im\{\hat{\mathbf{g}}^{l}_{\boldsymbol{x}}\}\right)\underline{\boldsymbol{A}}'^{\mathsf{T}} \tag{13.23}$$

$$\boldsymbol{h}^{\text{flow}}_{\boldsymbol{xx}}(\boldsymbol{\mu}) = 2\cdot\Re\left\{\mathbf{h}_{\boldsymbol{xx}}\left([\mathbf{h}^{*}]\,\boldsymbol{\mu}\right) + \mathbf{h}_{\boldsymbol{x}}{}^{\mathsf{T}}\left[\boldsymbol{\mu}\right]\mathbf{h}_{\boldsymbol{x}}{}^{*}\right\} \tag{13.24}$$

$$= 2\underline{\boldsymbol{A}}'\Re\left\{\hat{\mathbf{g}}^{l}_{\boldsymbol{xx}}\left(\left[\hat{\mathbf{g}}^{l}(\underline{\boldsymbol{A}}'^{\mathsf{T}}\boldsymbol{x})\right]^{*}\boldsymbol{\mu}\right) + \hat{\mathbf{g}}^{l\,\mathsf{T}}_{\boldsymbol{x}}\left[\boldsymbol{\mu}\right]\hat{\mathbf{g}}^{l\,*}_{\boldsymbol{x}}\right\}\underline{\boldsymbol{A}}'^{\mathsf{T}} \tag{13.25}$$

13.1.3 Squared Active Power

Let $\boldsymbol{h}(\boldsymbol{x})$ be the active power port injection function from (4.24)–(4.31) based on $\mathbf{g}^{S;\text{sys}}$ or $\mathbf{g}^{S}$, with its derivatives.

$$\boldsymbol{h}(\boldsymbol{x}) = \Re\{\hat{\mathbf{g}}^{S;\text{sys}}(\boldsymbol{x})\} = \Re\{\hat{\mathbf{g}}^{S}(\underline{\boldsymbol{A}}'^{\mathsf{T}}\boldsymbol{x})\} \tag{13.26}$$

$$= \Re\{\hat{\mathbf{s}}^{l}(\underline{\boldsymbol{A}}'^{\mathsf{T}}\boldsymbol{x}) + \hat{\mathbf{s}}^{lin}(\underline{\boldsymbol{A}}'^{\mathsf{T}}\boldsymbol{x}) + \hat{\mathbf{s}}^{nln}(\underline{\boldsymbol{A}}'^{\mathsf{T}}\boldsymbol{x})\} \tag{13.27}$$

$$\boldsymbol{h}_{\boldsymbol{x}} = \Re\{\hat{\mathbf{g}}_{\boldsymbol{x}}^{S;\text{sys}}\} = \Re\{\hat{\mathbf{g}}_{\boldsymbol{x}}^{S}\}\underline{\boldsymbol{A}}'^{\mathsf{T}} \tag{13.28}$$

$$= \Re\{\hat{\mathbf{s}}_{\boldsymbol{x}}^{l} + \hat{\mathbf{s}}_{\boldsymbol{x}}^{lin} + \hat{\mathbf{s}}_{\boldsymbol{x}}^{nln}\}\underline{\boldsymbol{A}}'^{\mathsf{T}} \tag{13.29}$$

$$\boldsymbol{h}_{\boldsymbol{xx}}(\boldsymbol{\mu}) = \Re\{\hat{\mathbf{g}}_{\boldsymbol{xx}}^{S;\text{sys}}(\boldsymbol{\mu})\} = \underline{\boldsymbol{A}}'\Re\{\hat{\mathbf{g}}_{\boldsymbol{xx}}^{S}(\boldsymbol{\mu})\}\underline{\boldsymbol{A}}'^{\mathsf{T}} \tag{13.30}$$

$$= \underline{\boldsymbol{A}}'\Re\{\hat{\mathbf{s}}_{\boldsymbol{xx}}^{l}(\boldsymbol{\mu}) + \hat{\mathbf{s}}_{\boldsymbol{xx}}^{lin}(\boldsymbol{\mu}) + \hat{\mathbf{s}}_{\boldsymbol{xx}}^{nln}(\boldsymbol{\mu})\}\underline{\boldsymbol{A}}'^{\mathsf{T}} \tag{13.31}$$

Then, based on (11.1)–(11.5), the squared active power flow constraint and its derivatives can be written in terms of $\boldsymbol{h}$ as follows, where $\underline{\boldsymbol{f}}_{\text{max}}$ is the vector of specifed active power flow limits.

$$\boldsymbol{h}^{\text{flow}}(\boldsymbol{x}) = [\boldsymbol{h}(\boldsymbol{x})]\,\boldsymbol{h}(\boldsymbol{x}) - \hat{\underline{\boldsymbol{f}}}_{\text{max}}^{2} \tag{13.32}$$

$$= \left[\Re\{\hat{\mathbf{g}}^{S}(\underline{\boldsymbol{A}}'^{\mathsf{T}}\boldsymbol{x})\}\right]\Re\{\hat{\mathbf{g}}^{S}(\underline{\boldsymbol{A}}'^{\mathsf{T}}\boldsymbol{x})\} - \hat{\underline{\boldsymbol{f}}}_{\text{max}}^{2} \tag{13.33}$$

$$\boldsymbol{h}_{\boldsymbol{x}}^{\text{flow}} = 2\,[\boldsymbol{h}]\,\boldsymbol{h}_{\mathsf{X}} \tag{13.34}$$

$$= 2\left[\Re\{\hat{\mathbf{g}}^{S}(\underline{\boldsymbol{A}}'^{\mathsf{T}}\boldsymbol{x})\}\right]\Re\{\hat{\mathbf{g}}_{\boldsymbol{x}}^{S}\}\underline{\boldsymbol{A}}'^{\mathsf{T}} \tag{13.35}$$

$$\boldsymbol{h}_{\boldsymbol{xx}}^{\text{flow}}(\boldsymbol{\mu}) = 2\cdot\left(\boldsymbol{h}_{\boldsymbol{xx}}([\boldsymbol{h}]\,\boldsymbol{\mu}) + \boldsymbol{h}_{\boldsymbol{x}}^{\mathsf{T}}\,[\boldsymbol{\mu}]\,\boldsymbol{h}_{\boldsymbol{x}}\right) \tag{13.36}$$

$$= 2\underline{\boldsymbol{A}}'\left(\Re\left\{\hat{\mathbf{g}}_{\boldsymbol{xx}}^{S}(\left[\Re\{\hat{\mathbf{g}}^{S}(\underline{\boldsymbol{A}}'^{\mathsf{T}}\boldsymbol{x})\}\right]\boldsymbol{\mu})\right\} + \Re\{\hat{\mathbf{g}}_{\boldsymbol{x}}^{S}\}^{\mathsf{T}}\,[\boldsymbol{\mu}]\,\Re\{\hat{\mathbf{g}}_{\boldsymbol{x}}^{S}\}\right)\underline{\boldsymbol{A}}'^{\mathsf{T}} \tag{13.37}$$

13.2 DC Model

13.2.1 Squared Active Power

Let $\boldsymbol{h}(\boldsymbol{x})$ be the active power port injection function from (4.40)–(4.43) based on $\boldsymbol{g}^{P;\text{sys}}$ or $\boldsymbol{g}^{P}$, with its derivatives.

$$\boldsymbol{h}(\boldsymbol{x}) = \hat{\boldsymbol{g}}^{P;\text{sys}}(\boldsymbol{x}) = \hat{\boldsymbol{g}}^{P}(\underline{\boldsymbol{A}}^{\mathsf{T}}\boldsymbol{x}) \tag{13.38}$$

$$\boldsymbol{h}_{\boldsymbol{x}} = \hat{\boldsymbol{g}}^{P;\text{sys}}_{\boldsymbol{x}} = \hat{\boldsymbol{g}}^{P}_{\boldsymbol{x}}\underline{\boldsymbol{A}}^{\mathsf{T}} \tag{13.39}$$

$$= \begin{bmatrix} \underline{\hat{\boldsymbol{B}}\boldsymbol{C}}^{\mathsf{T}} & \underline{\hat{\boldsymbol{K}}\boldsymbol{D}}^{\mathsf{T}} \end{bmatrix} \tag{13.40}$$

Then, based on (11.1)–(11.5), the squared active power flow constraint and its derivatives can be written in terms of $\boldsymbol{h}$ as follows, where $\underline{\boldsymbol{f}}_{\text{max}}$ is the vector of specifed active power flow limits.

$$\boldsymbol{h}^{\text{flow}}(\boldsymbol{x}) = [\boldsymbol{h}(\boldsymbol{x})]\,\boldsymbol{h}(\boldsymbol{x}) - \underline{\hat{\boldsymbol{f}}}^{2}_{\text{max}} \tag{13.41}$$

$$= \left[\hat{\boldsymbol{g}}^{P}(\underline{\boldsymbol{A}}^{\mathsf{T}}\boldsymbol{x})\right]\hat{\boldsymbol{g}}^{P}(\underline{\boldsymbol{A}}^{\mathsf{T}}\boldsymbol{x}) - \underline{\hat{\boldsymbol{f}}}^{2}_{\text{max}} \tag{13.42}$$

$$\boldsymbol{h}^{\text{flow}}_{\boldsymbol{x}} = 2\,[\boldsymbol{h}]\,\boldsymbol{h}_{\mathsf{x}} \tag{13.43}$$

$$= 2\left[\hat{\boldsymbol{g}}^{P}(\underline{\boldsymbol{A}}^{\mathsf{T}}\boldsymbol{x})\right]\begin{bmatrix} \underline{\hat{\boldsymbol{B}}\boldsymbol{C}}^{\mathsf{T}} & \underline{\hat{\boldsymbol{K}}\boldsymbol{D}}^{\mathsf{T}} \end{bmatrix} \tag{13.44}$$

14 Reference Voltage Angle Constraint

Voltage angle constraints at reference nodes for the AC polar formulation or for the DC model appear as simple variable limits, but for the AC model cartesian formulation the constraint takes the following form.

$$\boldsymbol{g}^{\text{ref}}(\boldsymbol{x}) = \mathbf{0} \tag{14.1}$$

Let $\underline{\boldsymbol{J}}$ be the matrix used to select the reference node voltages $\hat{\mathbf{v}}$.

$$\hat{\mathbf{v}} = \underline{\boldsymbol{J}}\mathbf{v}. \tag{14.2}$$

With $\underline{\boldsymbol{\theta}}^{\text{ref}}$ specifying the corresponding desired reference node angles, the angle constraint function can be written

$$\boldsymbol{g}^{\text{ref}}(\boldsymbol{x}) = \underline{\boldsymbol{J}}\boldsymbol{\theta}(\boldsymbol{x}) - \underline{\boldsymbol{\theta}}^{\text{ref}} \tag{14.3}$$

$$= \hat{\boldsymbol{\theta}}(\boldsymbol{x}) - \underline{\boldsymbol{\theta}}^{\text{ref}}. \tag{14.4}$$

The derivatives then are based directly on those from Section 5.3.

14.1 First Derivatives

$$\boldsymbol{g}_{\boldsymbol{u}}^{\text{ref}} = \frac{\partial \boldsymbol{g}^{\text{ref}}}{\partial \boldsymbol{u}} = \hat{\boldsymbol{\theta}}_{\boldsymbol{u}} = -\left[\hat{\boldsymbol{\nu}}\right]^{-2}\left[\hat{\boldsymbol{w}}\right]\underline{\boldsymbol{J}} \tag{14.5}$$

$$\boldsymbol{g}_{\boldsymbol{w}}^{\text{ref}} = \frac{\partial \boldsymbol{g}^{\text{ref}}}{\partial \boldsymbol{w}} = \hat{\boldsymbol{\theta}}_{\boldsymbol{w}} = \left[\hat{\boldsymbol{\nu}}\right]^{-2}\left[\hat{\boldsymbol{u}}\right]\underline{\boldsymbol{J}} \tag{14.6}$$

14.2 Second Derivatives

$$\boldsymbol{g}_{\boldsymbol{uu}}^{\text{ref}}(\boldsymbol{\lambda}) = \hat{\boldsymbol{\theta}}_{\boldsymbol{uu}}(\boldsymbol{\lambda}) = 2\underline{\boldsymbol{J}}^{\mathsf{T}}\left[\boldsymbol{\lambda}\right]\left[\hat{\boldsymbol{\nu}}\right]^{-4}\left[\hat{\boldsymbol{u}}\right]\left[\hat{\boldsymbol{w}}\right]\underline{\boldsymbol{J}} \tag{14.7}$$

$$\boldsymbol{g}_{\boldsymbol{uw}}^{\text{ref}}(\boldsymbol{\lambda}) = \hat{\boldsymbol{\theta}}_{\boldsymbol{uw}}(\boldsymbol{\lambda}) = \underline{\boldsymbol{J}}^{\mathsf{T}}\left[\boldsymbol{\lambda}\right]\left[\hat{\boldsymbol{\nu}}\right]^{-4}\left(\left[\hat{\boldsymbol{w}}\right]^{2} - \left[\hat{\boldsymbol{u}}\right]^{2}\right)\underline{\boldsymbol{J}} \tag{14.8}$$

$$\boldsymbol{g}_{\boldsymbol{wu}}^{\text{ref}}(\boldsymbol{\lambda}) = \hat{\boldsymbol{\theta}}_{\boldsymbol{wu}}(\boldsymbol{\lambda}) = \underline{\boldsymbol{J}}^{\mathsf{T}}\left[\boldsymbol{\lambda}\right]\left[\hat{\boldsymbol{\nu}}\right]^{-4}\left(\left[\hat{\boldsymbol{w}}\right]^{2} - \left[\hat{\boldsymbol{u}}\right]^{2}\right)\underline{\boldsymbol{J}} \tag{14.9}$$

$$\boldsymbol{g}_{\boldsymbol{ww}}^{\text{ref}}(\boldsymbol{\lambda}) = \hat{\boldsymbol{\theta}}_{\boldsymbol{ww}}(\boldsymbol{\lambda}) = -2\underline{\boldsymbol{J}}^{\mathsf{T}}\left[\boldsymbol{\lambda}\right]\left[\hat{\boldsymbol{\nu}}\right]^{-4}\left[\hat{\boldsymbol{u}}\right]\left[\hat{\boldsymbol{w}}\right]\underline{\boldsymbol{J}} \tag{14.10}$$

15 Voltage Magnitude Limits

Voltage magnitude limits only apply to the AC model. For the polar formulation, they are simple variable limits, but for the cartesian formulation the constraints take the following form.

$$\boldsymbol{g}^{\boldsymbol{\nu}^{\max}}(\boldsymbol{x}) \leq \boldsymbol{0} \tag{15.1}$$

$$\boldsymbol{g}^{\boldsymbol{\nu}^{\min}}(\boldsymbol{x}) \leq \boldsymbol{0} \tag{15.2}$$

where

$$\boldsymbol{g}^{\boldsymbol{\nu}^{\max}}(\boldsymbol{x}) = \hat{\boldsymbol{\nu}}(\boldsymbol{x}) - \underline{\hat{\boldsymbol{\nu}}}^{\max} \tag{15.3}$$

$$\boldsymbol{g}^{\boldsymbol{\nu}^{\min}}(\boldsymbol{x}) = \underline{\hat{\boldsymbol{\nu}}}^{\min} - \hat{\boldsymbol{\nu}}(\boldsymbol{x}). \tag{15.4}$$

The derivatives then are based directly on those from Section 5.3, where the derivatives of $\boldsymbol{g}^{\boldsymbol{\nu}^{\min}}$ are simply the negative of the corresponding derivative of $\boldsymbol{g}^{\boldsymbol{\nu}^{\max}}$.

15.1 First Derivatives

$$\boldsymbol{g}_{\boldsymbol{u}}^{\boldsymbol{\nu}^{\max}} = \hat{\boldsymbol{\nu}}_{\boldsymbol{u}} = [\hat{\boldsymbol{\nu}}]^{-1} [\hat{\boldsymbol{u}}] \underline{\boldsymbol{J}} \tag{15.5}$$

$$\boldsymbol{g}_{\boldsymbol{w}}^{\boldsymbol{\nu}^{\max}} = \hat{\boldsymbol{\nu}}_{\boldsymbol{w}} = [\hat{\boldsymbol{\nu}}]^{-1} [\hat{\boldsymbol{w}}] \underline{\boldsymbol{J}} \tag{15.6}$$

15.2 Second Derivatives

$$\boldsymbol{g}_{\boldsymbol{uu}}^{\boldsymbol{\nu}^{\max}}(\boldsymbol{\mu}) = \hat{\boldsymbol{\nu}}_{\boldsymbol{uu}}(\boldsymbol{\mu}) = \underline{\boldsymbol{J}}^{\mathsf{T}} [\boldsymbol{\mu}] [\hat{\boldsymbol{\nu}}]^{-3} [\hat{\boldsymbol{w}}]^2 \underline{\boldsymbol{J}} \tag{15.7}$$

$$\boldsymbol{g}_{\boldsymbol{uw}}^{\boldsymbol{\nu}^{\max}}(\boldsymbol{\mu}) = \hat{\boldsymbol{\nu}}_{\boldsymbol{uw}}(\boldsymbol{\mu}) = -\underline{\boldsymbol{J}}^{\mathsf{T}} [\boldsymbol{\mu}] [\hat{\boldsymbol{\nu}}]^{-3} [\hat{\boldsymbol{u}}] [\hat{\boldsymbol{w}}] \underline{\boldsymbol{J}} \tag{15.8}$$

$$\boldsymbol{g}_{\boldsymbol{wu}}^{\boldsymbol{\nu}^{\min}}(\boldsymbol{\mu}) = \hat{\boldsymbol{\nu}}_{\boldsymbol{wu}}(\boldsymbol{\mu}) = -\underline{\boldsymbol{J}}^{\mathsf{T}} [\boldsymbol{\mu}] [\hat{\boldsymbol{\nu}}]^{-3} [\hat{\boldsymbol{u}}] [\hat{\boldsymbol{w}}] \underline{\boldsymbol{J}} \tag{15.9}$$

$$\boldsymbol{g}_{\boldsymbol{ww}}^{\boldsymbol{\nu}^{\min}}(\boldsymbol{\mu}) = \hat{\boldsymbol{\nu}}_{\boldsymbol{ww}}(\boldsymbol{\mu}) = \underline{\boldsymbol{J}}^{\mathsf{T}} [\boldsymbol{\mu}] [\hat{\boldsymbol{\nu}}]^{-3} [\hat{\boldsymbol{u}}]^2 \underline{\boldsymbol{J}} \tag{15.10}$$

16 Voltage Magnitude Squared Limits

Alternatively, voltage magnitude limits can be implemented for the cartesian formulation of the AC model in terms of the square of the voltage magnitudes. In this case we have

$$\boldsymbol{g}^{\boldsymbol{\nu}^{\max}}(\boldsymbol{x}) = \hat{\boldsymbol{\nu}}(\boldsymbol{x})^2 - (\underline{\hat{\boldsymbol{\nu}}}^{\max})^2 = \hat{\boldsymbol{u}}^2 + \hat{\boldsymbol{w}}^2 - (\underline{\hat{\boldsymbol{\nu}}}^{\max})^2 \tag{16.1}$$

$$\boldsymbol{g}^{\boldsymbol{\nu}^{\min}}(\boldsymbol{x}) = (\underline{\hat{\boldsymbol{\nu}}}^{\min})^2 - \hat{\boldsymbol{\nu}}(\boldsymbol{x})^2 = (\underline{\hat{\boldsymbol{\nu}}}^{\min})^2 - (\hat{\boldsymbol{u}}^2 + \hat{\boldsymbol{w}}^2). \tag{16.2}$$

This results in slightly simpler derivatives, where each derivative of $\boldsymbol{g}^{\boldsymbol{\nu}^{\min}}$ is still simply the negative of the corresponding derivative of $\boldsymbol{g}^{\boldsymbol{\nu}^{\max}}$.

16.1 First Derivatives

$$\boldsymbol{g}_{\boldsymbol{u}}^{\boldsymbol{\nu}^{\max}} = \frac{\partial \boldsymbol{g}^{\boldsymbol{\nu}^{\max}}}{\partial \boldsymbol{u}} = 2\left[\hat{\boldsymbol{\nu}}\right]\hat{\boldsymbol{\nu}}_{\boldsymbol{u}} = 2\left[\hat{\boldsymbol{u}}\right]\underline{\boldsymbol{J}} \tag{16.3}$$

$$\boldsymbol{g}_{\boldsymbol{w}}^{\boldsymbol{\nu}^{\max}} = \frac{\partial \boldsymbol{g}^{\boldsymbol{\nu}^{\max}}}{\partial \boldsymbol{w}} = 2\left[\hat{\boldsymbol{\nu}}\right]\hat{\boldsymbol{\nu}}_{\boldsymbol{w}} = 2\left[\hat{\boldsymbol{w}}\right]\underline{\boldsymbol{J}} \tag{16.4}$$

16.2 Second Derivatives

$$\boldsymbol{g}_{\boldsymbol{uu}}^{\boldsymbol{\nu}^{\max}}(\boldsymbol{\mu}) = \frac{\partial}{\partial \boldsymbol{u}}\left(\boldsymbol{g}_{\boldsymbol{u}}^{\boldsymbol{\nu}^{\max}\mathsf{T}}\boldsymbol{\mu}\right) = 2\underline{\boldsymbol{J}}^{\mathsf{T}}\left[\boldsymbol{\mu}\right]\underline{\boldsymbol{J}} \tag{16.5}$$

$$\boldsymbol{g}_{\boldsymbol{uw}}^{\boldsymbol{\nu}^{\max}}(\boldsymbol{\mu}) = \frac{\partial}{\partial \boldsymbol{w}}\left(\boldsymbol{g}_{\boldsymbol{u}}^{\boldsymbol{\nu}^{\max}\mathsf{T}}\boldsymbol{\mu}\right) = \boldsymbol{0} \tag{16.6}$$

$$\boldsymbol{g}_{\boldsymbol{wu}}^{\boldsymbol{\nu}^{\min}}(\boldsymbol{\mu}) = \frac{\partial}{\partial \boldsymbol{u}}\left(\boldsymbol{g}_{\boldsymbol{w}}^{\boldsymbol{\nu}^{\max}\mathsf{T}}\boldsymbol{\mu}\right) = \boldsymbol{0} \tag{16.7}$$

$$\boldsymbol{g}_{\boldsymbol{ww}}^{\boldsymbol{\nu}^{\min}}(\boldsymbol{\mu}) = \frac{\partial}{\partial \boldsymbol{w}}\left(\boldsymbol{g}_{\boldsymbol{w}}^{\boldsymbol{\nu}^{\max}\mathsf{T}}\boldsymbol{\mu}\right) = 2\underline{\boldsymbol{J}}^{\mathsf{T}}\left[\boldsymbol{\mu}\right]\underline{\boldsymbol{J}} \tag{16.8}$$

17 Branch Angle Difference Limits

Branch angle difference limits can be written as

$$\boldsymbol{g}^{\boldsymbol{\theta}^{\max}}(\boldsymbol{x}) \leq \mathbf{0} \tag{17.1}$$

$$\boldsymbol{g}^{\boldsymbol{\theta}^{\min}}(\boldsymbol{x}) \leq \mathbf{0} \tag{17.2}$$

Let $\underline{\boldsymbol{C}}^{\mathrm{ft}}$ be defined as the difference between the incidence matrices $\underline{\boldsymbol{C}}^{\mathrm{f}}$ and $\underline{\boldsymbol{C}}^{\mathrm{t}}$ for the "from" and "to" ports of the aggregate branch model, respectively.

$$\underline{\boldsymbol{C}}^{\mathrm{ft}} = \underline{\boldsymbol{C}}^{\mathrm{t}} - \underline{\boldsymbol{C}}^{\mathrm{t}} \tag{17.3}$$

If $\underline{\boldsymbol{J}}$ is used to select the branches of interest and $\hat{\underline{\boldsymbol{C}}}^{\mathrm{ft}} \equiv \underline{\boldsymbol{C}}^{\mathrm{ft}}\underline{\boldsymbol{J}}^{\mathsf{T}}$, then the branch angle difference constraint functions can be written as linear functions of the voltage angles.

$$\boldsymbol{g}^{\boldsymbol{\theta}^{\max}}(\boldsymbol{x}) = \hat{\underline{\boldsymbol{C}}}^{\mathrm{ft}\,\mathsf{T}}\boldsymbol{\theta} - \hat{\underline{\boldsymbol{\theta}}}^{\max} \tag{17.4}$$

$$\boldsymbol{g}^{\boldsymbol{\theta}^{\min}}(\boldsymbol{x}) = \hat{\underline{\boldsymbol{\theta}}}^{\min} - \hat{\underline{\boldsymbol{C}}}^{\mathrm{ft}\,\mathsf{T}}\boldsymbol{\theta} \tag{17.5}$$

For the AC polar formulation or for the DC model, these are simple linear functions the voltage angle variables $\boldsymbol{\theta}$, but for the AC model cartesian formulation these angles are nonlinear functions of $\boldsymbol{x}$, i.e. $\boldsymbol{\theta} = \boldsymbol{\theta}(\boldsymbol{x})$.

The derivatives then are based directly on those from Section 5.3, where each derivative of $\boldsymbol{g}^{\boldsymbol{\theta}^{\min}}$ is simply the negative of the corresponding derivative of $\boldsymbol{g}^{\boldsymbol{\theta}^{\max}}$.

17.1 First Derivatives

$$\boldsymbol{g}_{\boldsymbol{u}}^{\boldsymbol{\theta}^{\max}} = \frac{\partial \boldsymbol{g}^{\boldsymbol{\theta}^{\max}}}{\partial \boldsymbol{u}} = \hat{\underline{\boldsymbol{C}}}^{\mathrm{ft}\,\mathsf{T}}\boldsymbol{\theta}_{\boldsymbol{u}} = -\hat{\underline{\boldsymbol{C}}}^{\mathrm{ft}\,\mathsf{T}}\left[\boldsymbol{\nu}\right]^{-2}\left[\boldsymbol{w}\right] \tag{17.6}$$

$$\boldsymbol{g}_{\boldsymbol{w}}^{\boldsymbol{\theta}^{\max}} = \frac{\partial \boldsymbol{g}^{\boldsymbol{\theta}^{\max}}}{\partial \boldsymbol{w}} = \hat{\underline{\boldsymbol{C}}}^{\mathrm{ft}\,\mathsf{T}}\boldsymbol{\theta}_{\boldsymbol{w}} = \hat{\underline{\boldsymbol{C}}}^{\mathrm{ft}\,\mathsf{T}}\left[\boldsymbol{\nu}\right]^{-2}\left[\boldsymbol{u}\right] \tag{17.7}$$

17.2 Second Derivatives

$$\boldsymbol{g}_{\boldsymbol{uu}}^{\boldsymbol{\theta}^{\max}}(\boldsymbol{\mu}) = \boldsymbol{\theta}_{\boldsymbol{uu}}(\underline{\hat{\boldsymbol{C}}}^{\mathrm{ft}}\boldsymbol{\mu}) = 2\left[\underline{\hat{\boldsymbol{C}}}^{\mathrm{ft}}\boldsymbol{\mu}\right][\boldsymbol{\nu}]^{-4}[\boldsymbol{u}][\boldsymbol{w}] \tag{17.8}$$

$$\boldsymbol{g}_{\boldsymbol{uw}}^{\boldsymbol{\theta}^{\max}}(\boldsymbol{\mu}) = \boldsymbol{\theta}_{\boldsymbol{uw}}(\underline{\hat{\boldsymbol{C}}}^{\mathrm{ft}}\boldsymbol{\mu}) = \left[\underline{\hat{\boldsymbol{C}}}^{\mathrm{ft}}\boldsymbol{\mu}\right][\boldsymbol{\nu}]^{-4}\left([\boldsymbol{w}]^2 - [\boldsymbol{u}]^2\right) \tag{17.9}$$

$$\boldsymbol{g}_{\boldsymbol{wu}}^{\boldsymbol{\theta}^{\max}}(\boldsymbol{\mu}) = \boldsymbol{\theta}_{\boldsymbol{wu}}(\underline{\hat{\boldsymbol{C}}}^{\mathrm{ft}}\boldsymbol{\mu}) = \left[\underline{\hat{\boldsymbol{C}}}^{\mathrm{ft}}\boldsymbol{\mu}\right][\boldsymbol{\nu}]^{-4}\left([\boldsymbol{w}]^2 - [\boldsymbol{u}]^2\right) \tag{17.10}$$

$$\boldsymbol{g}_{\boldsymbol{ww}}^{\boldsymbol{\theta}^{\max}}(\boldsymbol{\mu}) = \boldsymbol{\theta}_{\boldsymbol{ww}}(\underline{\hat{\boldsymbol{C}}}^{\mathrm{ft}}\boldsymbol{\mu}) = -2\left[\underline{\hat{\boldsymbol{C}}}^{\mathrm{ft}}\boldsymbol{\mu}\right][\boldsymbol{\nu}]^{-4}[\boldsymbol{u}][\boldsymbol{w}] \tag{17.11}$$

18 Acknowledgments

The author would like to acknowledge and thank Baljinnyam Sereeter for his work included in Matpower *Technical Note 3* [5] and Matpower *Technical Note 4* [6], upon which some of the material in this document is based.

This material is based upon work supported in part by the National Science Foundation under Grant Nos. 1642341 and 1931421. Any opinions, findings, and conclusions or recommendations expressed in this material are those of the author(s) and do not necessarily reflect the views of the National Science Foundation.

References

[1] R. D. Zimmerman, C. E. Murillo-Sánchez, and R. J. Thomas, "Matpower: Steady-State Operations, Planning and Analysis Tools for Power Systems Research and Education," *Power Systems, IEEE Transactions on*, vol. 26, no. 1, pp. 12–19, Feb. 2011.
doi: 10.1109/TPWRS.2010.2051168 2

[2] R. D. Zimmerman, C. E. Murillo-Sánchez (2020). Matpower [Software]. Available: https://matpower.org
doi: 10.5281/zenodo.3236535 2

[3] R. D. Zimmerman, C. E. Murillo-Sánchez. Matpower User's Manual. 2020. [Online]. Available: https://matpower.org/docs/MATPOWER-manual.pdf
doi: 10.5281/zenodo.3236519 2

[4] R. D. Zimmerman, *AC Power Flows, Generalized OPF Costs and their Derivatives using Complex Matrix Notation*, Matpower *Technical Note 2*, February 2010. [Online]. Available: https://matpower.org/docs/TN2-OPF-Derivatives.pdf
doi: 10.5281/zenodo.3237866 2

[5] B. Sereeter and R. D. Zimmerman, *Addendum to AC Power Flows and their Derivatives using Complex Matrix Notation: Nodal Current Balance*, Matpower *Technical Note 3*, April 2018. [Online]. Available: https://matpower.org/docs/TN3-More-OPF-Derivatives.pdf
doi: 10.5281/zenodo.3237900 2, 18

[6] B. Sereeter and R. D. Zimmerman, *AC Power Flows and their Derivatives using Complex Matrix Notation and Cartesian Coordinate Voltages*, Matpower *Technical Note 4*, April 2018. [Online]. Available: https://matpower.org/docs/TN4-OPF-Derivatives-Cartesian.pdf
doi: 10.5281/zenodo.3237909 2, 18