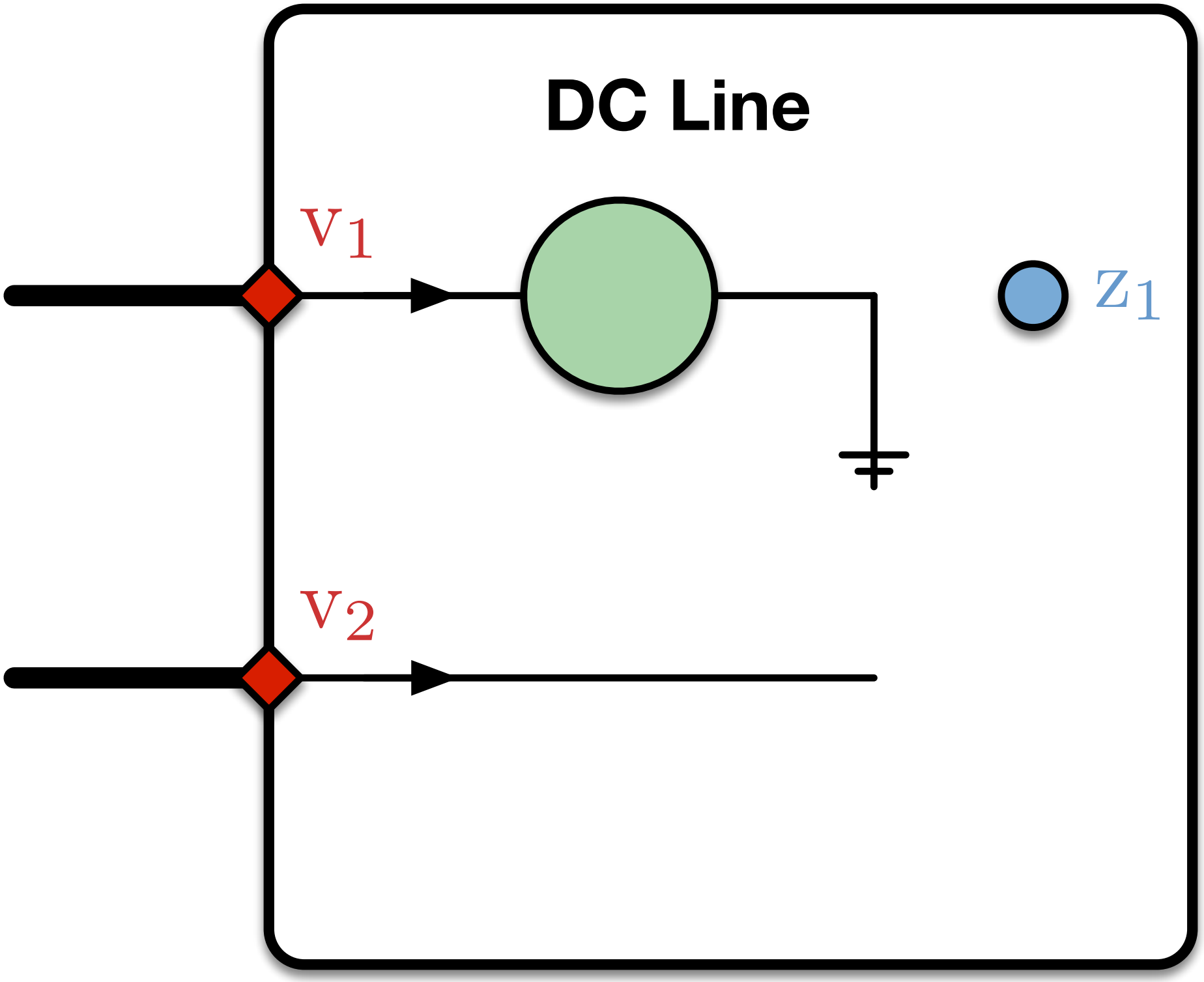
DC Line
v_1
z_1
v_2