Examining the Limits of the Application of Semidefinite Programming to Power Flow Problems

Bernard C. Lesieutre, Daniel K. Molzahn, Alex R. Borden, and Christopher L. DeMarco
Electrical and Computer Engineering Department
University of Wisconsin-Madison
Madison, WI 53706, USA
Email: lesieutre@wisc.edu, molzahn@wisc.edu, borden@wisc.edu, demarco@engr.wisc.edu

***Abstract*—The application of semidefinite programming (SDP) to power system problems has recently attracted substantial research interest. Specifically, a recent SDP formulation offers a convex relaxation to the well-known, typically nonconvex "optimal power flow" (OPF) problem. This new formulation was demonstrated to yield zero duality gap for several standard power systems test cases, thereby ensuring a globally optimal OPF solution in each. The first goal of the work here is to investigate this SDP algorithm for the OPF, and show by example that it can fail to give a physically meaningful solution (i.e., it has a non-zero duality gap) in some scenarios of practical interest. The remainder of this paper investigates a SDP approach utilizing modified objective and constraints to compute all solutions of the nonlinear power flow equations. Several variants are described. Results suggest SDP's promise as an efficient algorithm for identifying large numbers of solutions to the power flow equations.**

I. Introduction

The optimal power flow (OPF) problem seeks decision variable values to yield an optimal operating point for an electric power system in terms of a specified objective and subject to a wide range of engineering limits on active and reactive power generation, bus voltage magnitudes, transmission line and transformer flows, and possibly network stability constraints. Total generation cost is the typical objective; other objectives, such as loss minimization, may be considered.

The nonconvexity of the OPF problem has made solution techniques an ongoing topic of research since the problem was first introduced in 1962 by Carpentier [1]. Nonconvexity in typical OPF formulations enters largely through the nonlinear power flow equations representing physical constraints on the electric grid [2]. The long literature reflects a wide range of proposed solution techniques including successive quadratic programs, Lagrangian relaxation, genetic algorithms, particle swarm optimization, and interior point methods [3], [4].

Recent research has pursued the application of semidefinite programming (SDP) to the OPF problem [5], [6], [7]. SDP formulations create a convex relaxation of the OPF problem; the global solution of the relaxed problem can be found in polynomial time. If the relaxed problem can then be guaranteed to display a zero duality gap, the solution of the relaxed problem must be the global optimum of the original OPF. None of the prior methods offer such a means to guarantee global optimum, and hence the SDP formulation has attracted significant interest.

While this approach is promising, the relaxation inherent in the SDP formulation may yield solutions that are not physically meaningful. However, with their success on a significant number of standard IEEE test cases, Lavaei and Low claim in [7] that their SDP formulation will satisfy a condition ensuring zero duality gap between the primal and dual objective functions for most practical OPF problems.

We explore a counterexample to this assertion: a three-bus system with a constraint on the magnitude of complex power flow ("apparent power") on a transmission line. This example represents a power system with parameters in realistic ranges, operated with a commonly imposed constraint. The SDP formulation finds a physically meaningful solution when the line-flow limit is reasonably large, but fails when a stricter line-flow limit is enforced. The latter case has a non-zero duality gap.

Directing attention to constraint equations within the OPF, the power flow equations govern the relationships between voltages and active and reactive power injections in a power system. Solutions to the power flow equations correspond to the equilibrium points of the underlying differential equations that govern power system dynamic behavior; it is well known that large numbers of such solutions can exist [8]. Locating multiple solutions to the power flow equations, particularly those exhibiting low-voltage magnitude, is important to power system stability assessment [9], [10], [11], [12].

One very direct approach to finding multiple power flow solutions simply initializes a Newton-Raphson iteration [13] over a range of carefully selected candidate initial conditions. In another approach, Salam *et al.* [14] applied the homotopy method of Chow *et al.* [15] to the power flow problem. This method can reliably find all solutions [14] but has a computational complexity that grows exponentially with system size. Ma and Thorp developed a continuation power flow algorithm that is computationally tractable for large systems [16]. However, while the original work claimed a guarantee that the algorithm would find all solutions, a recent critique of this paper revealed a flaw in the associated proof [17], and we have subsequently constructed a counterexample. Thus one may fairly characterize the state of the art as lacking a tractable algorithm to compute all solutions to the power flow solutions.

We investigate a SDP formulation of the power flow problem in the context of five-bus and seven-bus example

systems whose modest dimension allow for identification of all solutions via [14]. We attempt to replicate these solutions using two variants of the SDP approach to the OPF: one modifying constraints, the other modifying the objective. The constraint modification proved wholly unsuccessful. Objective modification had varying success, as described in more detail below.

This paper is organized as follows. In Section II, we present the OPF problem in both its classical form and the SDP form. In Section III, we discuss cases where the SDP formulation of the OPF problem fails to provide physically meaningful results. This includes an example using a three-bus system where the SDP formulation fails with a strict line-flow constraint. In Section IV, we discuss techniques for finding multiple solutions to the power flow problem using the SDP formulation.

II. The Optimal Power Flow Problem

We first present the OPF problem as it is classically formulated. Specifically, this formulation is in terms of rectangular voltage coordinates, active and reactive power generation, and apparent power line-flow limits. See [18] for a review of the power flow equations in rectangular voltage coordinates. As noted above, this classical OPF formulation is generally nonconvex. We then review the SDP formulation of [7].

A. Classical Formulation of the Optimal Power Flow Problem

Consider an n-bus power system, where $\mathcal{N} = \{1, 2, \ldots, n\}$ represents the set of all buses, $\mathcal{G}$ represents the set of generator buses, and $\mathcal{L}$ represents the set of all lines. Let $P_{Dk} + jQ_{Dk}$ represent the active and reactive load demand at each bus $k \in \mathcal{N}$. Let $V_k = V_{dk} + jV_{qk}$ represent the voltage phasors in rectangular coordinates at each bus $k \in \mathcal{N}$. Let $P_{Gk} + jQ_{Gk}$ represent the generation at generator buses $k \in \mathcal{G}$. Let S_{lm} represent the apparent power flow on the line $(l, m) \in \mathcal{L}$. Superscripts "max" and "min" denote specified upper and lower limits. Let $\mathbf{Y} = \mathbf{G} + j\mathbf{B}$ denote the network admittance matrix.

Define a quadratic objective function associated with each generator $k \in \mathcal{G}$, typically representing a dollar/hour variable operating cost.

$$f_k\left(P_{Gk}\right) = c_{k2}P_{Gk}^2 + c_{k1}P_{Gk} + c_{k0} \tag{1}$$

The classical OPF problem can then be written as

$$\min \sum_{k\in\mathcal{G}} f_k\left(P_{Gk}\right) \tag{2a}$$

subject to

$$P_{Gk}^{\min} \le P_{Gk} \le P_{Gk}^{\max} \qquad \forall k \in \mathcal{G} \tag{2b}$$

$$Q_{Gk}^{\min} \le Q_{Gk} \le Q_{Gk}^{\max} \qquad \forall k \in \mathcal{G} \tag{2c}$$

$$\left(V_k^{\min}\right)^2 \le V_{dk}^2 + V_{qk}^2 \le \left(V_k^{\max}\right)^2 \qquad \forall k \in \mathcal{N} \tag{2d}$$

$$|S_{lm}| \le S_{lm}^{\max} \qquad \forall\,(l,m) \in \mathcal{L} \tag{2e}$$

$$P_{Gk} - P_{Dk} = V_{dk}\sum_{i=1}^{n}\left(G_{ik}V_{di} - B_{ik}V_{qi}\right) + V_{qk}\sum_{i=1}^{n}\left(B_{ik}V_{di} + G_{ik}V_{qi}\right) \tag{2f}$$

$$Q_{Gk} - Q_{Dk} = V_{dk}\sum_{i=1}^{n}\left(-B_{ik}V_{di} - G_{ik}V_{qi}\right) + V_{qk}\sum_{i=1}^{n}\left(G_{ik}V_{di} - B_{ik}V_{qi}\right) \tag{2g}$$

Note that this formulation limits the apparent power flow measured at each end of a given line, recognizing that active and reactive line losses can cause these quantities to differ.

B. Semidefinite Programming Formulation of the Optimal Power Flow Problem

This section describes the formulation of the OPF problem as adopted from the SDP algorithm of [7]. Let e_k denote the kth standard basis vector in $\mathbb{R}^n$. Define the matrix $Y_k = e_k e_k^T \mathbf{Y}$, where the superscript T indicates the transpose operator. Define the matrix $Y_{lm} = \left(j\frac{b_{lm}}{2} + y_{lm}\right) e_l e_l^T - \left(y_{lm}\right) e_l e_m^T$, where b_{lm} is the total shunt susceptance and y_{lm} is the series admittance of the line (see Figure 1, $y_{lm} = \left(R_{lm} + jX_{lm}\right)^{-1}$).

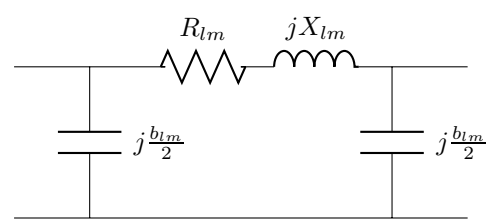

Fig. 1. Transmission Line II Circuit Model

Matrices employed in the SDP algorithm are given as

$$\mathbf{Y}_k = \frac{1}{2}\begin{bmatrix} \mathrm{Re}\left(Y_k + Y_k^T\right) & \mathrm{Im}\left(Y_k^T - Y_k\right) \\ \mathrm{Im}\left(Y_k - Y_k^T\right) & \mathrm{Re}\left(Y_k + Y_k^T\right) \end{bmatrix} \tag{3}$$

$$\bar{\mathbf{Y}}_k = -\frac{1}{2}\begin{bmatrix} \mathrm{Im}\left(Y_k + Y_k^T\right) & \mathrm{Re}\left(Y_k - Y_k^T\right) \\ \mathrm{Re}\left(Y_k^T - Y_k\right) & \mathrm{Im}\left(Y_k + Y_k^T\right) \end{bmatrix} \tag{4}$$

$$\mathbf{M}_k = \begin{bmatrix} e_k e_k^T & \mathbf{0} \\ \mathbf{0} & e_k e_k^T \end{bmatrix} \tag{5}$$

$$\mathbf{Y}_{lm} = \frac{1}{2}\begin{bmatrix} \mathrm{Re}\left(Y_{lm} + Y_{lm}^T\right) & \mathrm{Im}\left(Y_{lm}^T - Y_{lm}\right) \\ \mathrm{Im}\left(Y_{lm} - Y_{lm}^T\right) & \mathrm{Re}\left(Y_{lm} + Y_{lm}^T\right) \end{bmatrix} \tag{6}$$

$$\bar{\mathbf{Y}}_{lm} = -\frac{1}{2}\begin{bmatrix} \mathrm{Im}\left(Y_{lm} + Y_{lm}^T\right) & \mathrm{Re}\left(Y_{lm} - Y_{lm}^T\right) \\ \mathrm{Re}\left(Y_{lm}^T - Y_{lm}\right) & \mathrm{Im}\left(Y_{lm} + Y_{lm}^T\right) \end{bmatrix} \tag{7}$$

Define vectors of Lagrange multipliers associated with lower inequality bounds (2b), (2c), and (2d) as $\underline{\lambda}_k$, $\underline{\gamma}_k$, and $\underline{\mu}_k$, and those associated with upper bounds as $\bar{\lambda}_k$, $\bar{\gamma}_k$, and $\bar{\mu}_k$, respectively.

Define 3×3 symmetric matrices to represent generalized Lagrange multipliers for the line-flow limits (2e): $\mathbf{H}_{lm}$, with $\mathbf{H}_{lm}^{ik}$ the (i,k) element of $\mathbf{H}_{lm}$.

Define 2×2 symmetric matrices to represent generalized Lagrange multipliers for the quadratic cost functions (2a): $\mathbf{R}_k$, with $\mathbf{R}_k^{ik}$ the (i,k) element of $\mathbf{R}_k$.

Define aggregate multipliers λ_k, γ_k, and μ_k for all $k \in \mathcal{N}$.

$$\lambda_k = \begin{cases} \bar{\lambda}_k - \underline{\lambda}_k + c_{k1} + 2\sqrt{c_{k2}}\,\mathbf{R}_k^{12} & \text{if } k \in \mathcal{G} \\ \bar{\lambda}_k - \underline{\lambda}_k & \text{otherwise} \end{cases} \tag{8}$$

$$\gamma_k = \bar{\gamma}_k - \underline{\gamma}_k \tag{9}$$

$$\mu_k = \bar{\mu}_k - \underline{\mu}_k \tag{10}$$

Finally, define a scalar real-valued function h and matrix-valued function $\mathbf{A}$.

$$\begin{aligned} h = &\sum_{k \in \mathcal{N}} \Big\{ \underline{\lambda}_k P_k^{\min} - \bar{\lambda}_k P_k^{\max} + \lambda_k P_{Dk} + \underline{\gamma}_k Q_k^{\min} \\ &- \bar{\gamma}_k Q_k^{\max} + \gamma_k Q_{Dk} + \underline{\mu}_k \left(V_k^{\min}\right)^2 - \bar{\mu}_k \left(V_k^{\max}\right)^2 \Big\} \\ &+ \sum_{k \in \mathcal{G}} \left(c_{k0} - \mathbf{R}_k^{22}\right) - \sum_{(l,m) \in \mathcal{L}} \Big\{ \left(S_{lm}^{\max}\right)^2 \mathbf{H}_{lm}^{11} + \mathbf{H}_{lm}^{22} + \mathbf{H}_{lm}^{33} \Big\} \end{aligned} \tag{11}$$

$$\begin{aligned} \mathbf{A} = &\sum_{k \in \mathcal{N}} \left\{ \lambda_k \mathbf{Y}_k + \gamma_k \bar{\mathbf{Y}}_k + \mu_k \mathbf{M}_k \right\} \\ &+ \sum_{(l,m) \in \mathcal{L}} \left\{ 2\mathbf{H}_{lm}^{12} \mathbf{Y}_{lm} + 2\mathbf{H}_{lm}^{13} \bar{\mathbf{Y}}_{lm} \right\} \end{aligned} \tag{12}$$

The SDP formulation of the dual OPF problem may then be written as:

$$\max \quad h \tag{13a}$$

$$\text{subject to}$$

$$\mathbf{A} \succeq 0 \tag{13b}$$

$$\mathbf{H}_{lm} \succeq 0 \qquad \forall\,(l,m) \in \mathcal{L} \tag{13c}$$

$$\mathbf{R}_k \succeq 0, \quad \mathbf{R}_k^{11} = 1 \qquad \forall k \in \mathcal{G} \tag{13d}$$

$$\underline{\lambda}_k \geq 0,\ \bar{\lambda}_k \geq 0,\ \underline{\gamma}_k \geq 0,\ \bar{\gamma}_k \geq 0,\ \underline{\mu}_k \geq 0,\ \bar{\mu}_k \geq 0 \tag{13e}$$

where $\succeq 0$ indicates the corresponding matrix is positive semidefinite. This formulation is Optimization 4 in [7].

The matrix $\mathbf{W}$ is the generalized Lagrange multiplier of constraint (13b). If the matrix function $\mathbf{A}$ evaluated at the dual problem's optimal solution has two zero eigenvalues, [7] demonstrates that a unique rank one $\mathbf{W}$ can be obtained, and the duality gap is zero. The optimal voltages in rectangular coordinates can be extracted from the rank one $\mathbf{W}$. Expressing the rank one matrix as an outer product, $\mathbf{W} = xx^T$, one has

$$x = \begin{bmatrix} V_{d1} & \cdots & V_{dn} & V_{q1} & \cdots & V_{qn} \end{bmatrix}^T \tag{14}$$

yielding the globally optimal solution to the primal OPF problem.

III. Discussion on the Semidefinite Programming Formulation's Ability to Provide Physically Meaningful Results

It is important to note that the SDP formulation above does not enforce the two-dimensional nullspace for $\mathbf{A}$ nor the corresponding rank one condition on $\mathbf{W}$. If the nullspace of $\mathbf{A}$ has dimension greater than two at the dual problem's solution, the duality gap is non-zero and $\mathbf{W}$ does not yield a solution to the primal OPF problem of interest. In [7] the authors argue that "practical systems operating at normal conditions" will display this zero duality gap based on their experience with a number of IEEE test systems. However, in general, the SDP formulation of the dual problem offers three possible outcomes: a solution that meets conditions for zero duality gap, and hence yields a globally optimal solution to the OPF problem; a solution to the relaxed SDP formulation with a higher rank $\mathbf{W}$ (hence physically meaningless as a solution to the original OPF problem); the SDP formulation may have no feasible solution.

We begin by discussing a class of solution that [7] discounts as being abnormal, and for which they argue one may not expect a zero duality gap: that of negative Lagrange multipliers associated with active power balance constraints.

A. Duality Gap in the Case of Negative LMPs

The Lagrange multipliers λ_k for the active power constraints given in (2f) and (8) are, in the terminology of power markets, locational marginal prices (LMP). These are commonly computed and updated many times daily in wholesale electricity markets in the U.S. Simple intuition regarding unconstrained markets might lead one to believe an OPF solution with negative λ_k, (i.e., consumers at some locations are paid to consume) could be considered "abnormal" and excluded from consideration. The authors of [7] do so, stating that their SDP formulation is not guaranteed to yield a solution with zero duality gap under these conditions. However, power system markets operate at conditions with negative LMPs with some regularity. Binding line-flow constraints can cause negative LMPs. In systems with binding line-flow constraints, it is possible that increasing the power delivered to certain buses may relieve congestion elsewhere in the system. Reducing transmission congestion allows for greater output from cheaper generators, thus reducing overall system costs. Negative LMPs will occur at buses where increasing power consumption leads to decreased overall system costs.

The MidwestISO, which operates one the largest wholesale power markets in the U.S., displays a color-coded contour map of LMPs throughout its system on its publicly accessible website [19], updating the LMP values at 5-minute intervals. This market saw periods of negative LMPs many times throughout the summer 2011 period; a sample June 2011 LMP contour is shown in Figure 2. In this example, 32 of the 190 commercial pricing nodes in the MidwestISO market displayed negative LMPs, with the most negative being a price of \$-112 per MWh at a node in the Hoosier Energy control area. Inability to reliably compute OPF solutions for situations that yield

negative LMPs appears to be a practical limitation of the SDP formulation.

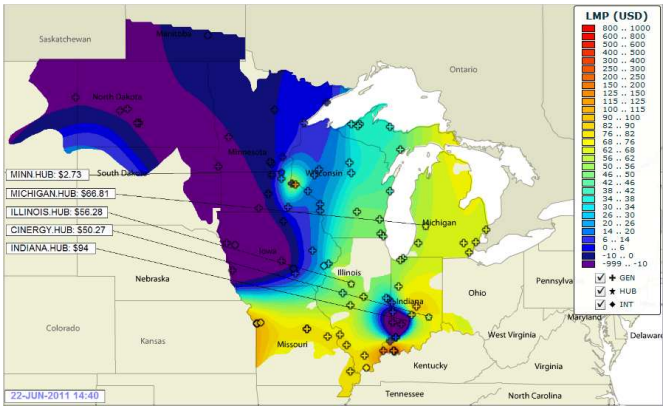

Fig. 2. Negative LMPs (Lagrange Multipliers) in the MidwestISO Market [19]

B. Duality Gap in the Case of Strict Line-Flow Constraints

Here we provide a new computational example to demonstrate that the SDP formulation of the OPF problem may also fail to produce physically meaningful solutions in the presence of line-flow constraints. The SDP formulation of the OPF problem was solved using YALMIP version 3 [20] and SeDuMi version 1.3 [21] for a simple three-bus example. For comparison purposes, the classical formulation of the OPF problem was solved using an interior point method implemented in MATPOWER version 4.0 [4].

The three-bus power system for our example is depicted in Figure 3, where the numeric values indicate the $P_{Dk} + jQ_{Dk}$ load demands in MW and MVAR. This example uses a 100 MVA base. The active and reactive power outputs of generators 1 and 2 have large, nonbinding limits. The "generator"at bus 3 is a synchronous condenser (i.e. it produces only reactive power). The reactive power limits for generator 3 are large enough to be nonbinding. The quadratic generator cost curves for generators 1 and 2 are given in Table I for power generation in MWh, where c_2 is the coefficient of the squared term, c_1 is the coefficient of the linear term, and c_0 is a constant. There is no cost associated with generator 3 since it produces no active power. The network data are given in Table II. Line shunt susceptances are specified for the entire line (see Figure 1 for the Π model circuit representation). The voltage magnitudes at all buses are constrained to the range 1.1 to 0.9. All values are given in per unit.

Generator	c_2	c_1	c_0
1	\$0.11 per $(\text{MWh})^2$	\$5 per MWh	\$0
2	\$0.085 per $(\text{MWh})^2$	\$1.2 per MWh	\$0

TABLE I
THREE-BUS SYSTEM GENERATOR COST DATA

First consider a line-flow limit of 60 MVA enforced on both ends of the line between bus 2 and bus 3 (all other lines have no flow limits). The SDP formulation yields a physically meaningful result, as evidenced by the two-dimensional nullspace of $\mathbf{A}$, that matches the solution of the classical formulation. The solution is shown in Tables III and IV, and aggregated Lagrange multipliers (LMPs) for active and reactive power obtained from (8) and (9) are given in Table V.

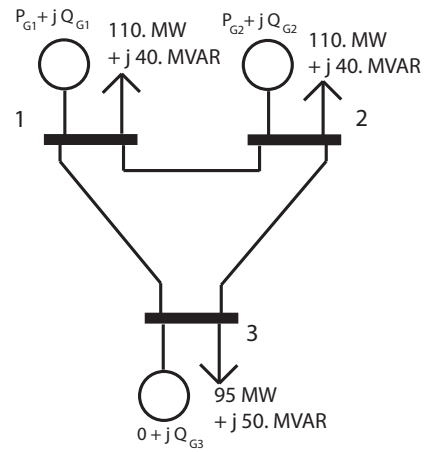

Fig. 3. Three-Bus Example System

From Bus	To Bus	R	X	b
1	3	0.065	0.620	0.450
3	2	0.025	0.750	0.700
1	2	0.042	0.900	0.300

TABLE II
THREE-BUS SYSTEM NETWORK DATA

	Bus 1	Bus 2	Bus 3
$\lvert V \rvert$	1.069	1.028	1.001
δ (degrees)	0	9.916	-13.561
P_g (MW)	131.09	185.93	0
Q_g (MVAR)	17.02	-3.50	0.06

TABLE III
SOLUTION TO 3-BUS SYSTEM WITH LINE-FLOW LIMIT OF 60 MVA (CLASSICAL AND SDP FORMULATIONS)

From Bus	To Bus	From MVA	To MVA
1	3	43.90	47.47
3	2	60.00	60.00
1	2	22.72	28.69

TABLE IV
LINE-FLOW DATA FOR 3-BUS SYSTEM WITH LINE-FLOW LIMIT OF 60 MVA (CLASSICAL AND SDP FORMULATIONS)

	Bus 1	Bus 2	Bus 3
λ (\$/MWh)	33.84	32.81	35.96
γ (\$/MVAR-hour)	0	0	0

TABLE V
AGGREGATED LAGRANGE MULTIPLIERS FOR 3-BUS SYSTEM WITH LINE-FLOW LIMIT OF 60 MVA

The optimal objective values for both the SDP and classical formulations are \$5707.07 per hour.

Now reduce the line-flow limit to 50 MVA while leaving the other parameters unchanged. The solution to the SDP formulation yields an $\mathbf{A}$ matrix with four-dimensional nullspace. The solution therefore has a non-zero duality gap and is no longer physically meaningful. However, the classical formulation solved via an interior point method in MATPOWER does yield a (at least locally optimal) solution as shown in Tables VI and VII. Aggregated Lagrange multipliers (prices) for active and reactive power obtained using MATPOWER are given in Table VIII. The aggregated Lagrange multipliers at the nonphysical SDP solution are given in Table IX. Note that all aggregated Lagrange multipliers in both the classical and SDP formulations are non-negative, and the active power balance Lagrange multipliers λ are strictly positive. The duality gap/loss-of-physically-meaningful SDP solution cannot, therefore, be attributed to negative Lagrange multipliers.

	Bus 1	Bus 2	Bus 3
$\|V\|$	1.100	0.926	0.900
δ (degrees)	0	7.259	-17.267
P_g (MW)	148.07	170.01	0
Q_g (MVAR)	54.70	-8.79	-4.84

TABLE VI
SOLUTION TO 3-BUS SYSTEM WITH LINE-FLOW LIMIT OF 50 MVA (CLASSICAL FORMULATION)

From Bus	To Bus	From MVA	To MVA
1	3	52.29	60.28
3	2	50.00	50.00
1	2	14.02	33.33

TABLE VII
LINE-FLOW DATA FOR 3-BUS SYSTEM WITH LINE-FLOW LIMIT OF 50 MVA (CLASSICAL FORMULATION)

	Bus 1	Bus 2	Bus 3
λ (\$/MWh)	37.57	30.10	45.54
γ (\$/MVAR-hour)	0	0	0

TABLE VIII
AGGREGATED LAGRANGE MULTIPLIERS FOR 3-BUS SYSTEM WITH LINE-FLOW LIMIT OF 50 MVA (CLASSICAL FORMULATION)

	Bus 1	Bus 2	Bus 3
λ (\$/MWh)	35.78	31.62	40.83
γ (\$/MVAR-hour)	0	0	0

TABLE IX
AGGREGATED LAGRANGE MULTIPLIERS FOR 3-BUS SYSTEM WITH LINE-FLOW LIMIT OF 50 MVA (SDP FORMULATION)

The optimal objective value for the SDP formulation is \$5789.87 per hour, whereas the optimal objective value to the classical formulation is \$5812.60 per hour. Thus, the objective function value at the relaxed solution of the SDP lower bounds that of the classical formulation, as expected. While space limitations preclude full system descriptions, larger examples also showed these same properties, in which the SDP algorithm yielded an $\mathbf{A}$ matrix of rank greater than two, and hence failed to provide a meaningful OPF solution. Again, the problematic solution cases appeared as sufficiently strict line-flow limits were imposed.

In cases for which the SDP formulation fails to provide a zero duality gap, one may conjecture that there remains useful information to be garnered, particularly in cases for which $\mathbf{W}$ is close to a rank one matrix. As a pragmatic heuristic, the binding constraints for the (nonphysical) solution to the SDP formulation might be assumed to be the same as those for the actual optimal solution. For an n-bus system with $2n$ binding constraints, the values of all unknown variables are fully determined, and, with a sufficiently close initial guess, could be computed via standard Newton-Raphson. In cases for which the binding constraints do not yield a fully determined system, the dimension of the feasible space is still significantly reduced, and the closest rank one approximation to $\mathbf{W}$ could be employed to yield an initial guess to an alternative OPF algorithm.

IV. THE POWER FLOW PROBLEM

We first review the power flow problem in rectangular coordinates. As noted previously, in practice, individual solutions are easily computed via Newton methods; the challenge lies in attempting to identify all solutions. To this end, we demonstrate how the power flow problem can be formulated as an OPF problem through suitable choice of the constraints and objective function. The SDP formulation of this problem is adapted to the goal of finding multiple solutions to the power flow equations.

A. The Power Flow Equations in Rectangular Coordinates

The power flow equations relate the active and reactive power injected at each bus to the voltage phasor at each bus. The variables associated with each bus k are the net active power injection ($P_k = P_{Gk} - P_{Dk}$), the net reactive power injection ($Q_k = Q_{Gk} - Q_{Dk}$), and the voltage $V_k = V_{dk} + jV_{qk}$. The power flow equations are shown in (2f) and (2g). The voltage magnitude equation is

$$|V_k|^2 = V_{dk}^2 + V_{qk}^2 \tag{15}$$

See [18] for a review of the power flow equations in rectangular voltage coordinates.

While (2f), (2g), and (15) must all be satisfied at all buses, only two equations are directly enforced at each bus when solving the power flow problem. To identify the class of constraints imposed at each, buses in the power flow problem are classified as one of three "types": PQ (bus indices denoted by $\mathcal{PQ}$), PV (bus indices denoted by $\mathcal{PV}$), and slack (bus index denoted by $\mathcal{S}$). PQ buses enforce the active and reactive power equations (2f) and (2g). PV buses enforce the active power and voltage magnitude equations (2f) and (15). Finally, a single slack bus enforces specified values of V_{dk} and V_{qk}.

B. The Power Flow Equations Formulated as an OPF Problem

By "tightening" inequality constraints that appear in the OPF problem (in the limit, upper and lower limits equal), it is clear that one can recover the equalities for the power flow problem as a subset of the standard constraints of the OPF problem. In particular, for sufficiently small $\epsilon > 0$, one may impose OPF constraints:

$$P_k - P_{Dk} - \epsilon \leq P_{Gk} \leq P_k - P_{Dk} + \epsilon \quad \forall k \in \{\mathcal{PQ}, \mathcal{PV}\} \quad \text{(16a)}$$
$$Q_k - Q_{Dk} - \epsilon \leq Q_{Gk} \leq Q_k - Q_{Dk} + \epsilon \; \forall k \in \mathcal{PQ} \quad \text{(16b)}$$
$$|V_k|^2 - \epsilon \leq V_{dk}^2 + V_{qk}^2 \leq |V_k|^2 + \epsilon \quad \forall k \in \{\mathcal{PV}, \mathcal{S}\} \quad \text{(16c)}$$

As will be described below, by suitable choice of objective function, one may seek to "steer" the OPF towards different power flow solutions. However, it is useful to first consider general properties of the respective feasible spaces for the power flow problem, the classical OPF problem, and the SDP formulation of the OPF problem. The feasible space of the power flow problem is made up of discrete points at the solutions to the power flow equations. The feasible space of the classical OPF problem is more difficult to characterize. It is generally nonconvex and may not be connected [2]. By appropriately setting the constraints, the OPF formulation of the power flow problem shrinks the feasible space to emulate a discrete set of points. The SDP formulation of the OPF problem is connected and convex. However, the rank relaxation of this formulation increases the feasible space to include nonphysically meaningful solutions. The rank relaxation also increases the feasible space of the power flow problem from a set of discrete points to a continuous space. This may result in nonphysically meaningful solutions to the SDP formulation of the power flow problem.

C. Finding Multiple Solutions to the Power Flow Equations

We discuss two different approaches using SDP to find multiple solutions to the power flow equations. The first approach involves modifying the constraints of the SDP formulation. The second approach involves modifying the objective function.

1) Example Systems: The five-bus and seven-bus systems shown in Figures 4 and 5 were used to test both approaches. Load, generation and voltage magnitudes in Figures 4 and 5 are given in per unit. Network values in Figures 4 and 5 are given as $R + jX$ in per unit. The complete set of power flow solutions for these systems have been calculated using a homotopy method [14], and are summarized in Table X and Table XI.

2) Modifying the Constraints: We first seek to differentiate among possible solutions by imposing an inequality constraint on slack bus active power. The solution having least power generated by the slack bus corresponds to the solution with lowest losses. This base solution is reliably found with no inequality constraint. Imposing a minimum slack bus power constraint greater than the slack bus power in the base solution forces the OPF to another solution with higher losses. However, in all such cases examined, the SDP solution had non-zero duality gap and failed to yield a meaningful solution to the power flow.

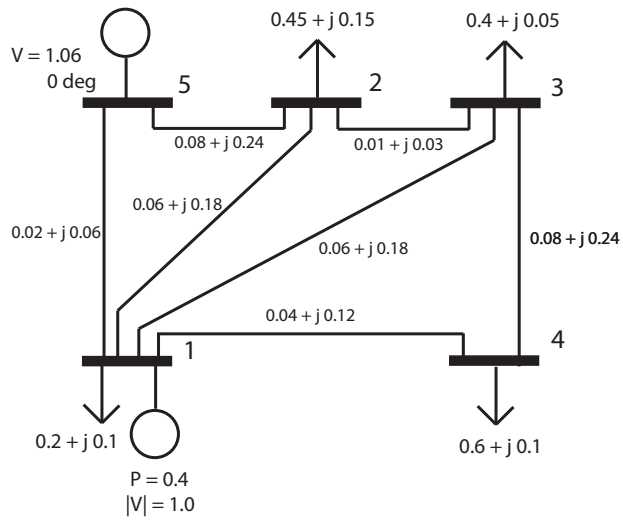

Fig. 4. Five-Bus Example System

	Solution				
	1	2	3	4	5
V_1	1.0000	1.0000	1.0000	1.0000	1.0000
V_2	0.9805	0.5012	0.3770	0.7933	0.0626
V_3	0.9771	0.5879	0.4108	0.7403	0.2160
V_4	0.9662	0.8317	0.0666	0.0580	0.6982
V_5	1.0600	1.0600	1.0600	1.0600	1.0600
δ_1	-2.0675	-138.9679	-128.5864	-12.1469	-126.6253
δ_2	-4.5358	-129.8511	-116.8370	-12.6793	-159.5293
δ_3	-4.8535	-134.8640	-124.1731	-13.8795	-144.7963
δ_4	-5.6925	-141.6605	-185.7340	-71.5017	-133.4401
δ_5	0.0000	0.0000	0.0000	0.0000	0.0000
	Solution				
	6	7	8	9	10
V_1	1.0000	1.0000	1.0000	1.0000	1.0000
V_2	0.1972	0.0563	0.0342	0.1968	0.0884
V_3	0.0301	0.0496	0.1846	0.0369	0.1658
V_4	0.6289	0.6327	0.6865	0.0814	0.0756
V_5	1.0600	1.0600	1.0600	1.0600	1.0600
δ_1	-16.5040	-18.0976	-16.9090	-22.5210	-119.8826
δ_2	-26.0422	-61.1266	-69.0465	-30.6818	-141.8399
δ_3	-81.8652	-80.6706	-37.7869	-85.9455	-144.7567
δ_4	-23.4519	-25.4435	-23.8729	-79.4189	-178.4992
δ_5	0.0000	0.0000	0.0000	0.0000	0.0000

TABLE X
THE TEN SOLUTIONS FOR THE FIVE-BUS SYSTEM

Additionally, we attempted to constrain the voltage magnitudes at PQ buses to be below the base solution results. This approach also failed; imposing such voltage constraints yielded only nonphysical results (i.e., non-zero duality gap).

3) Modifying the Objective Function: An alternate formulation examined selected slack bus active power generation as an objective to be maximized. The solution with highest losses for these-ustem, solution inale
se212.0398(v)6.1en-u-381.273(s)3.56067(u)-5.89115(s)3.56067(t)0.96307
this objective function.

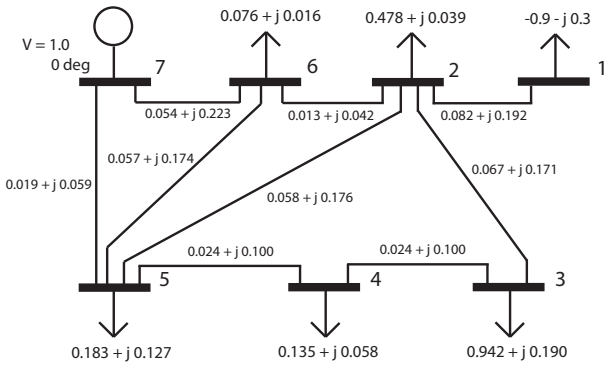

Fig. 5. Seven-Bus Example System

	Solution			
	1	2	3	4
V_1	1.0758	0.7312	0.2880	0.3435
V_2	0.9635	0.5876	0.5415	0.4332
V_3	0.9041	0.1745	0.5430	0.2497
V_4	0.9278	0.4122	0.6458	0.4359
V_5	0.9638	0.7229	0.7750	0.6879
V_6	0.9675	0.6638	0.6402	0.5496
V_7	1.0000	1.0000	1.0000	1.0000
δ_1	5.2859	14.9576	101.8188	88.3361
δ_2	-2.9342	-5.2212	-6.2931	-6.8346
δ_3	-8.4439	-52.6775	-19.8095	-44.2797
δ_4	-5.7500	-14.2056	-11.2462	-16.1362
δ_5	-2.4463	-3.2056	-3.8617	-3.9193
δ_6	-2.5918	-4.3031	-5.0158	-5.3138
δ_7	0.0000	0.0000	0.0000	0.0000

TABLE XI
THE FOUR SOLUTIONS FOR THE SEVEN-BUS SYSTEM

voltage magnitudes, in the form

$$\min c^T |V|^2 = \min \sum_{i=1}^{n} c_i \mathrm{trace}\left(\mathbf{M}_i \mathbf{W}\right) \tag{17}$$

where c is a vector of weights; i.e. the objective function in (17) is a weighted sum squares of voltage magnitudes. Appropriate choices of the weights in c favored solutions with low voltages at selected buses.

This method identified all of the ten solutions in the five-bus system, as summarized in Table XII, and all of the four solutions in the seven-bus system, as summarized in Table XIII. Solutions above the line in Tables XII and XIII were found using heuristically determined weights c. Similar heuristically determined weights were identified that were expected to find the remaining solutions (3, 5, and 10 for the five-bus system and 4 in the seven-bus system); however, the SDP formulation for these heuristically determined weights gave nonphysical results. Alternatively, testing a variety of randomly generated weights yielded the combinations below the line in Tables XII and XIII that found the remaining solutions.

As noted previously, solutions with non-zero duality gap in which $\mathbf{W}$ has rank greater than one can be used to estimate approximate, candidate solutions. As a heuristic, the eigenvector associated with the largest eigenvalue of $\mathbf{W}$ was

Solution	c_1	c_2	c_3	c_4	c_5
1	0	-1	-1	-1	0
2	0	1	-1	0	0
4	0	0	0	1	0
6	0	0	1	0	0
7	0	1	1	0	0
8	0	1	0	0	0
9	0	0	1	1	0
3	0	0.65	-0.70	0.90	0
5	0	0.70	-0.10	-0.15	0
10	0	0.45	-0.25	0.50	0

TABLE XII
COMBINATIONS OF WEIGHTS c AND CORRESPONDING SOLUTIONS FOR FIVE-BUS SYSTEM

Solution	c_1	c_2	c_3	c_4	c_5	c_6	c_7
1	-1	-1	-1	-1	-1	-1	0
2	0	0	1	0	0	0	0
3	1	0	0	0	0	0	0
4	0.30	-0.20	0.35	0.45	-0.40	0.05	0

TABLE XIII
COMBINATIONS OF WEIGHTS c AND CORRESPONDING SOLUTIONS FOR SEVEN-BUS SYSTEM

computed, appropriately scaled, and set as the initial condition for a Newton-Raphson power flow solver. With this approach, some, but not all, of the nonphysical solutions obtained from the SDP formulation for the five-bus and seven-bus systems converged to power flow solutions.

V. CONCLUSION

This paper has investigated existing and new applications of the semidefinite programming formulation of the optimal power flow problem. We have discussed two practical system conditions where the SDP formulation of the OPF problem may fail to give physically meaningful results. The first was already identified in the discussion of [7], but was not recognized as a commonly occurring practical system condition: that of negative bus LMPs. In a new result, this work has also provided a numerical optimal power flow example to demonstrate that a non-zero duality gap may arise in SDP formulation as a line-flow inequality constraint is progressively "tightened." Under these conditions, the SDP fails to provide a physically meaningful solution to the original OPF problem of interest.

To explore possible extensions of the SDP formulation in traditionally intractable power system computations, we next addressed the problem of locating all possible solutions to the power flow. To identify different power flow solutions, families of OPF problems were formulated by modifying the OPF constraints and objective function. In the test cases examined, the modified objective approach was successful in finding all of the power flow solutions. Although not all objective functions yielded physically meaningful solutions, objective functions capable of finding all solutions were identified. As a heuristic enhancement to the method, nonphysical solutions obtained from the SDP formulation were used to construct approximate

solutions that then initialized a traditional Newton-Raphson power flow solver.

The examples examined in this paper demonstrate that the SDP formulation in its present development is not capable of reliably solving the OPF problem in several practical operating conditions of interest. Initial attempts at adapting the SDP OPF approach to compute all possible power flow solutions showed promise in test cases, but did not give physically meaningful results for all objective functions and constraints. Clearly, the use of relaxation-based SDP methods in otherwise nonconvex power system problems has significant potential, but in its present development does not yet reliably solve the full range of practical problems of interest.

ACKNOWLEDGMENT

The authors acknowledge support of this work by U.S. Department of Energy under award #DE-SC0002319, as well as by the National Science Foundation under IUCRC award #0968833. Daniel Molzahn would like to acknowledge the support of the NSF Graduate Research Fellowship. The authors would also like to thank Dr. Hongbo Dong and Mr. Taedong Kim for their insightful comments and assistance in validating the results presented in this paper.

REFERENCES

[1] J. Carpentier, "Contribution to the Economic Dispatch Problem," *Bull. Soc. Franc. Elect*, vol. 8, no. 3, pp. 431–447, 1962.

[2] B. Lesieutre and I. Hiskens, "Convexity of the Set of Feasible Injections and Revenue Adequacy in FTR Markets," *IEEE Transactions on Power Systems*, vol. 20, no. 4, pp. 1790 – 1798, November 2005.

[3] Z. Qiu, G. Deconinck, and R. Belmans, "A Literature Survey of Optimal Power Flow Problems in the Electricity Market Context," in *Power Systems Conference and Exposition, 2009. PSCE '09. IEEE/PES*, March 2009, pp. 1–6.

[4] R. Zimmerman, C. Murillo-Sánchez, and R. Thomas, "MATPOWER: Steady-State Operations, Planning, and Analysis Tools for Power Systems Research and Education," *IEEE Transactions on Power Systems*, no. 99, pp. 1–8, 2011.

[5] X. Bai, H. Wei, K. Fujisawa, and Y. Wang, "Semidefinite Programming for Optimal Power Flow Problems," *International Journal of Electrical Power & Energy Systems*, vol. 30, no. 6-7, pp. 383–392, 2008.

[6] J. Lavaei and S. Low, "Convexification of Optimal Power Flow Problem," in *48th Annual Allerton Conference on Communication, Control, and Computing (Allerton), 2010*, October 2010, pp. 223 –232.

[7] ——, "Zero Duality Gap in Optimal Power Flow Problem," *To appear in IEEE Transactions on Power Systems*, 2011, available at https://www.cds.caltech.edu/~lavaei/TPS_1.pdf.

[8] A. Klos and A. Kerner, "The Non-Uniqueness of Load Flow Solution," *Proc. PSCC-5*, p. 3.1/8, Cambridge, 1975.

[9] H.-D. Chiang, F. Wu, and P. Varaiya, "Foundations of Direct Methods for Power System Transient Stability Analysis," *IEEE Transactions on Circuits and Systems*, vol. 34, no. 2, pp. 160 – 173, February 1987.

[10] M. Ribbens-Pavella and F. Evans, "Direct Methods for Studying Dynamics of Large-Scale Electric Power Systems-A Survey," *Automatica*, vol. 21, no. 1, pp. 1 – 21, 1985.

[11] V. Venikov, V. Stroev, V. Idelchick, and V. Tarasov, "Estimation of Electrical Power System Steady-State Stability in Load Flow Calculations," *IEEE Transactions on Power Apparatus and Systems*, vol. 94, no. 3, pp. 1034 – 1041, May 1975.

[12] Y. Tamura, H. Mori, and S. Iwamoto, "Relationship Between Voltage Instability and Multiple Load Flow Solutions in Electric Power Systems," *IEEE Transactions on Power Apparatus and Systems*, vol. PAS-102, no. 5, pp. 1115 –1125, May 1983.

[13] J. Glover, M. Sarma, and T. Overbye, *Power System Analysis and Design*. Thompson Learning, 2008.

[14] F. Salam, L. Ni, S. Guo, and X. Sun, "Parallel Processing for the Load Flow of Power Systems: The Approach and Applications," in *Proceedings of the 28th IEEE Conference on Decision and Control, 1989*, December 1989, pp. 2173 –2178 vol.3.

[15] S. Chow, J. Mallet-Paret, and J. Yorke, "Finding Zeros of Maps: Homotopy Methods that are Constructive With Probability One," *Math. Comp*, vol. 32, no. 143, pp. 887–899, 1978.

[16] W. Ma and S. Thorp, "An Efficient Algorithm to Locate All the Load Flow Solutions," *IEEE Transactions on Power Systems*, vol. 8, no. 3, p. 1077, 1993.

[17] H. Chen, "Cascaded Stalling of Induction Motors in Fault-Induced Delayed Voltage Recovery (FIDVR)," *Masters Thesis, University of Wisconsin-Madison, Department of Electrical and Computer Engineering*, 2011. [Online]. Available: http://minds.wisconsin.edu/handle/1793/53749

[18] R. Klump and T. Overbye, "A New Method for Finding Low-Voltage Power Flow Solutions," in *Power Engineering Society Summer Meeting, 2000. IEEE*, 2000.

[19] MidwestISO, "LMP Contour Map from 2:40 PM, June 22, 2011," http://www.midwestmarket.org/page/LMP+Contour+Map+%28EOR%29.

[20] J. Lofberg, "YALMIP: A Toolbox for Modeling and Optimization in MATLAB," in *Computer Aided Control Systems Design, 2004 IEEE International Symposium on*. IEEE, 2004, pp. 284–289.

[21] J. Sturm, "Using SeDuMi 1.02, A MATLAB Toolbox for Optimization Over Symmetric Cones," *Optimization Methods and Software*, vol. 11, no. 1, pp. 625–653, 1999.