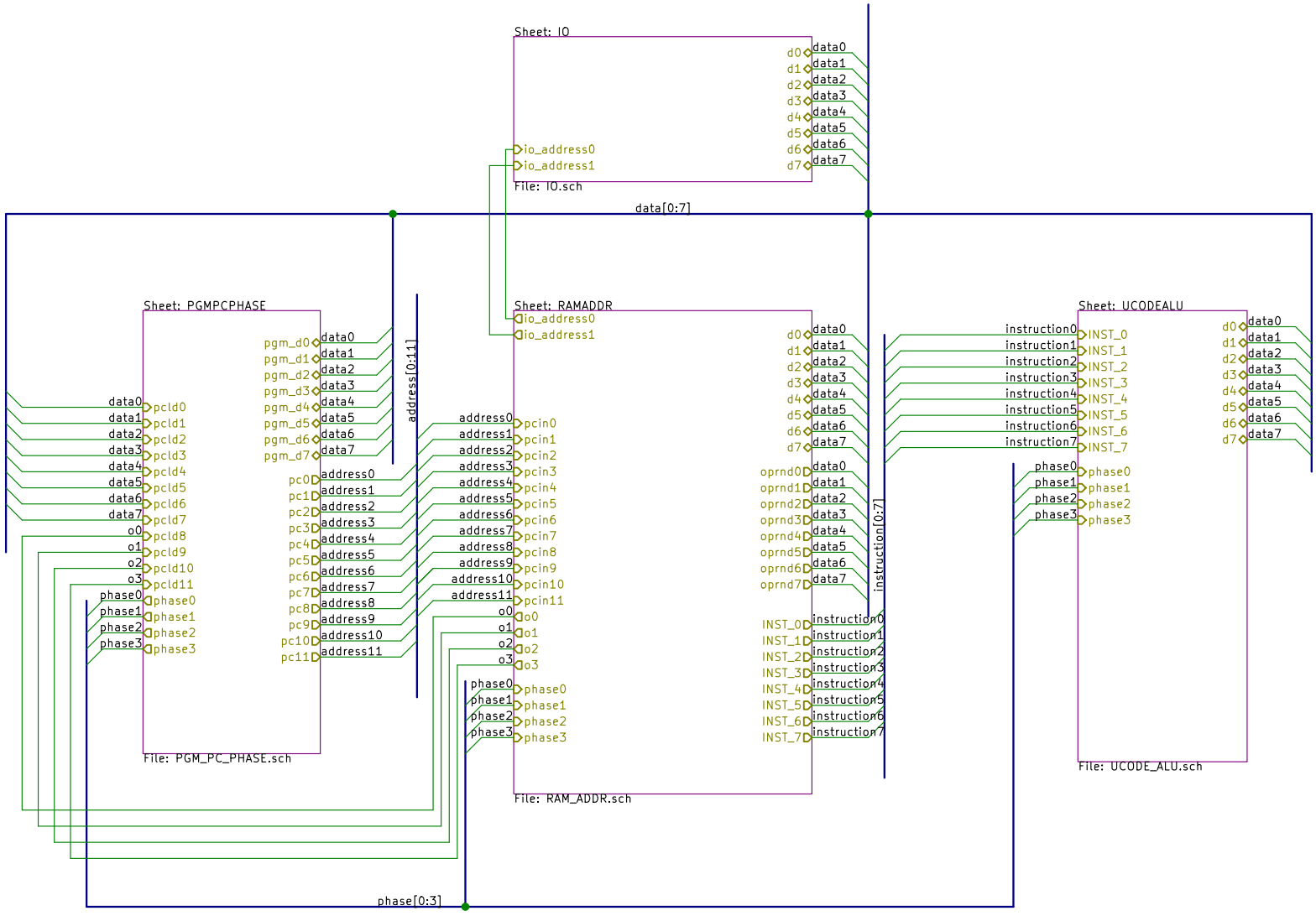
Sheet: IO
File: IO.sch
io_address0
io_address1
d0 d1 d2 d3 d4 d5 d6 d7
data0 data1 data2 data3 data4 data5 data6 data7
data[0:7]
Sheet: PGMPCPHASE
File: PGM_PC_PHASE.sch
pgm_d0 pgm_d1 pgm_d2 pgm_d3 pgm_d4 pgm_d5 pgm_d6 pgm_d7
pc0 pc1 pc2 pc3 pc4 pc5 pc6 pc7 pc8 pc9 pc10 pc11
pcld0 pcld1 pcld2 pcld3 pcld4 pcld5 pcld6 pcld7 pcld8 pcld9 pcld10 pcld11
phase0 phase1 phase2 phase3
o0 o1 o2 o3
address[0:11]
Sheet: RAMADDR
File: RAM_ADDR.sch
pcin0 pcin1 pcin2 pcin3 pcin4 pcin5 pcin6 pcin7 pcin8 pcin9 pcin10 pcin11
oprnd0 oprnd1 oprnd2 oprnd3 oprnd4 oprnd5 oprnd6 oprnd7
INST_0 INST_1 INST_2 INST_3 INST_4 INST_5 INST_6 INST_7
instruction0 instruction1 instruction2 instruction3 instruction4 instruction5 instruction6 instruction7
instruction[0:7]
Sheet: UCODEALU
File: UCODE_ALU.sch
phase[0:3]

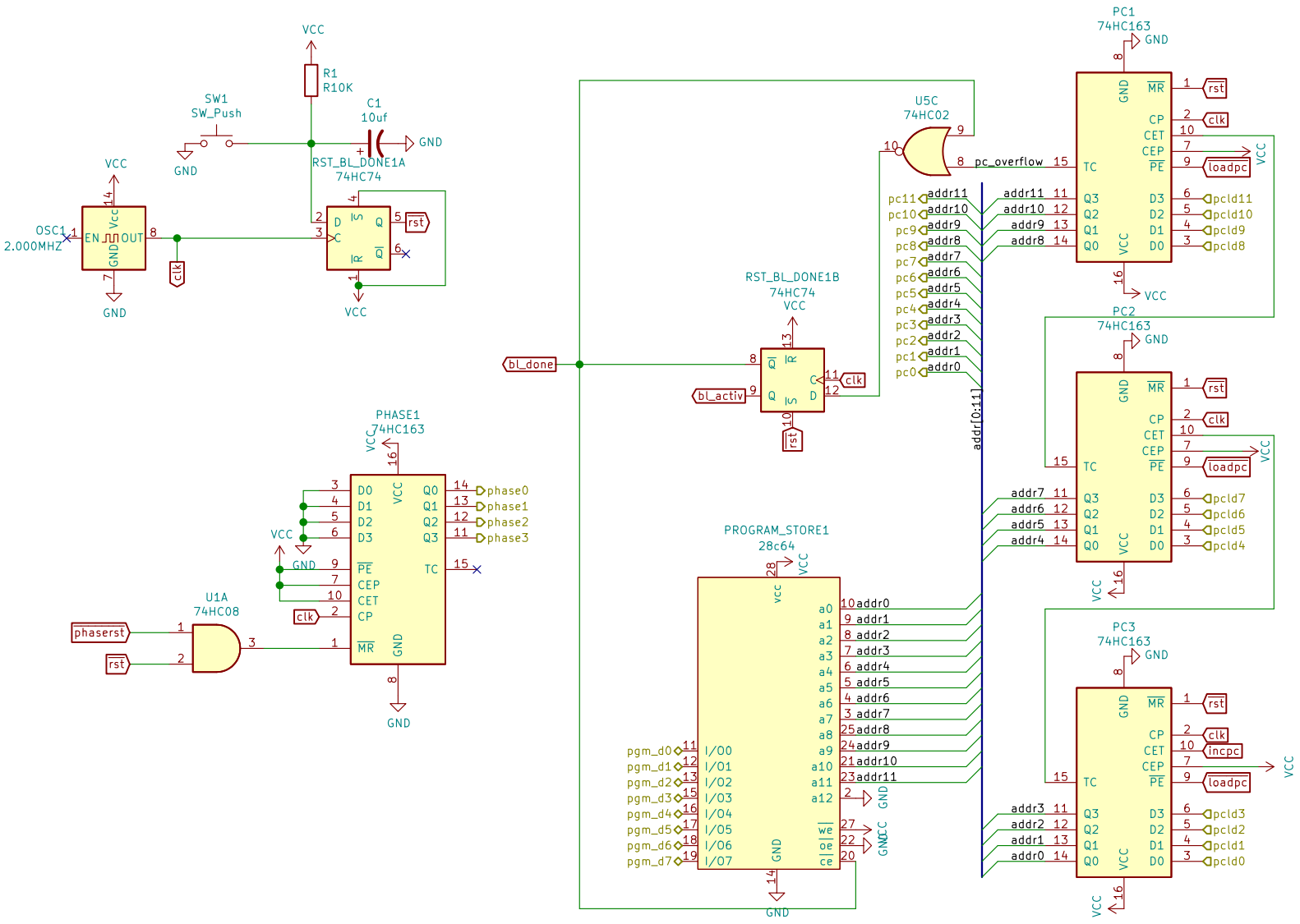
VCC
R1
R10K
SW1
SW_Push
GND
C1
10uf
GND
RST_BL_DONE1A
74HC74
VCC
OSC1
2.000MHZ
EN
OUT
GND
clk
rst
VCC
PHASE1
74HC163
D0
D1
D2
D3
Q0
Q1
Q2
Q3
PE
CEP
CET
CP
TC
MR
phase0
phase1
phase2
phase3
U1A
74HC08
phaserst
rst
bl_done
bl_activ
RST_BL_DONE1B
74HC74
U5C
74HC02
pc_overflow
PROGRAM_STORE1
28c64
I/O0
I/O1
I/O2
I/O3
I/O4
I/O5
I/O6
I/O7
a0
a1
a2
a3
a4
a5
a6
a7
a8
a9
a10
a11
a12
we
oe
ce
pgm_d0
pgm_d1
pgm_d2
pgm_d3
pgm_d4
pgm_d5
pgm_d6
pgm_d7
addr[0:11]
PC1
74HC163
PC2
74HC163
PC3
74HC163
loadpc
incpc
pcld11
pcld10
pcld9
pcld8
pcld7
pcld6
pcld5
pcld4
pcld3
pcld2
pcld1
pcld0

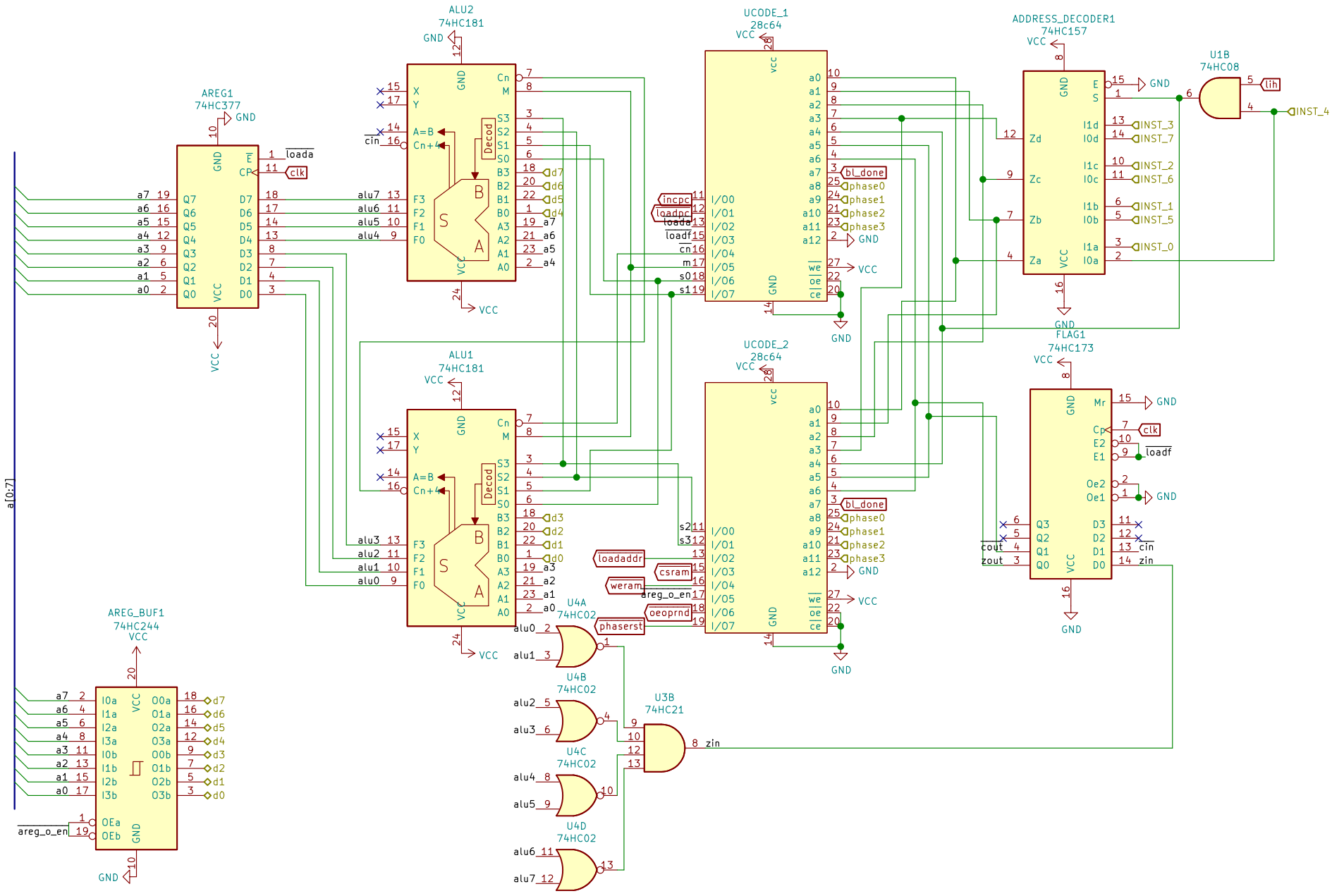
AREG1
74HC377
ALU2
74HC181
ALU1
74HC181
UCODE_1
28c64
UCODE_2
28c64
ADDRESS_DECODER1
74HC157
U1B
74HC08
FLAG1
74HC173
AREG_BUF1
74HC244
U4A
74HC02
U4B
74HC02
U4C
74HC02
U4D
74HC02
U3B
74HC21
a[0:7]
clk
loada
bl_done
phase0
phase1
phase2
phase3
incpc
loadpc
loadf
loaddr
csram
weram
areg_o_en
oeoprnd
phaserst
lih
INST_4
INST_3
INST_7
INST_2
INST_6
INST_1
INST_5
INST_0
cout
zout
cin
zin
GND
VCC

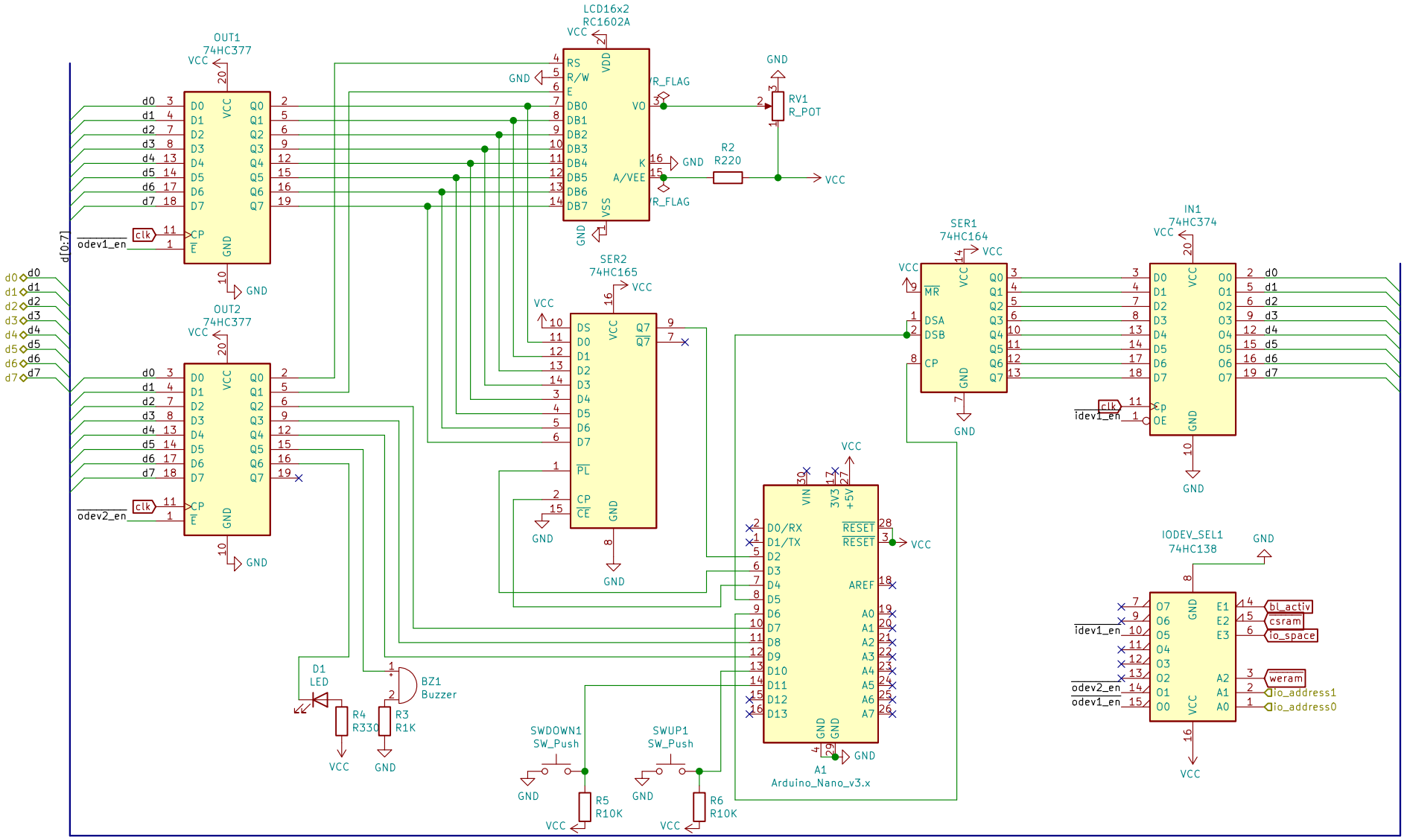
OUT1
74HC377
OUT2
74HC377
LCD16x2
RC1602A
SER2
74HC165
SER1
74HC164
IN1
74HC374
IODEV_SEL1
74HC138
A1
Arduino_Nano_v3.x
RV1
R_POT
R2
R220
R3
R1K
R4
R330
R5
R10K
R6
R10K
D1
LED
BZ1
Buzzer
SWDOWN1
SW_Push
SWUP1
SW_Push
odev1_en
odev2_en
idev1_en
d[0:7]
bl_activ
csram
io_space
weram
io_address1
io_address0
VCC
GND

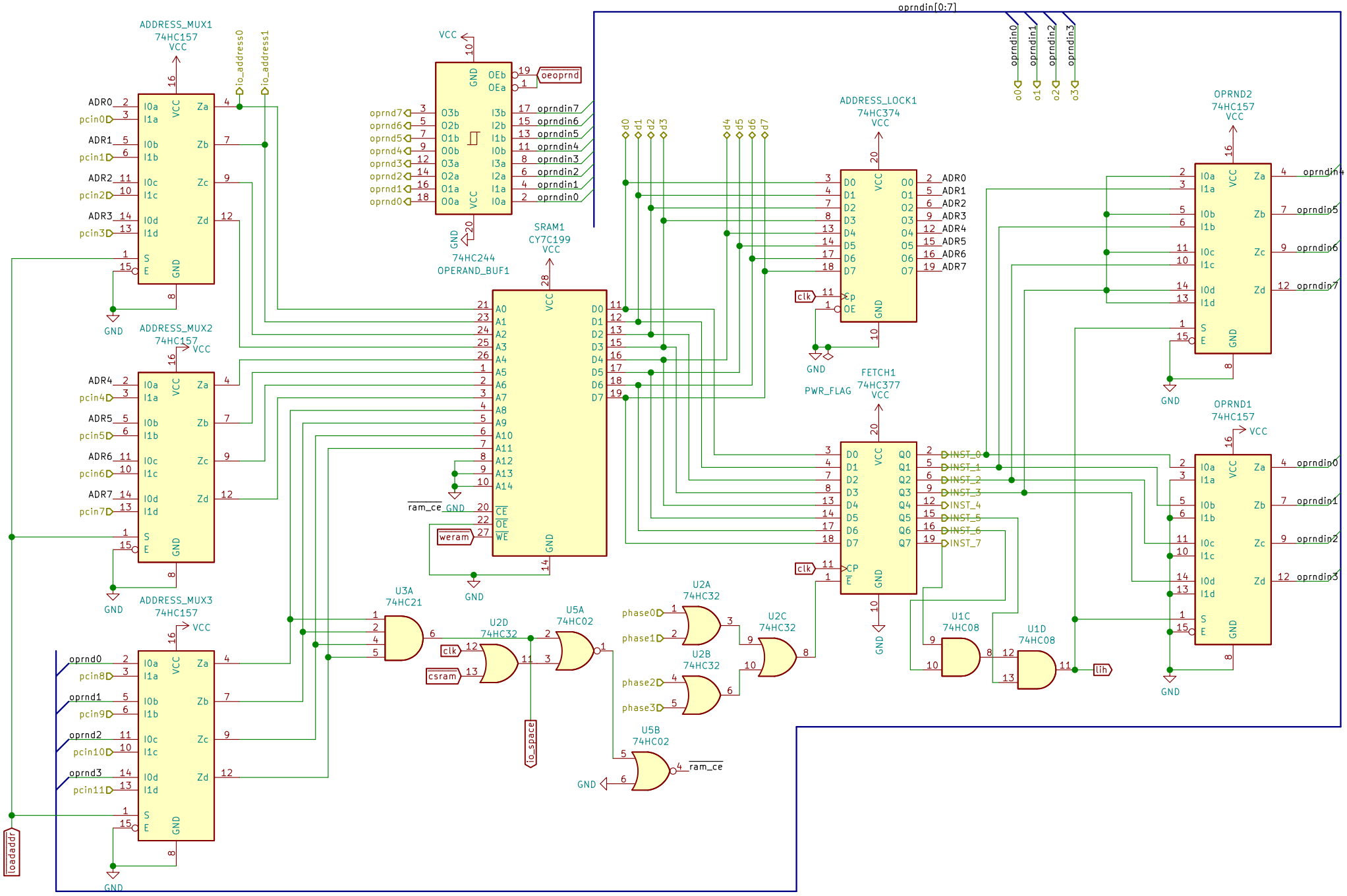
ADDRESS_MUX1
74HC157
VCC
ADDRESS_MUX2
74HC157
ADDRESS_MUX3
74HC157
74HC244
OPERAND_BUF1
SRAM1
CY7C199
ADDRESS_LOCK1
74HC374
FETCH1
74HC377
PWR_FLAG
OPRND2
74HC157
OPRND1
74HC157
U3A
74HC21
U2D
74HC32
U5A
74HC02
U2A
74HC32
U2B
74HC32
U2C
74HC32
U5B
74HC02
U1C
74HC08
U1D
74HC08
oprndin[0:7]
io_address0
io_address1
oeoprnd
weram
csram
clk
io_space
ram_ce
lih
loadaddr
GND