Applied Machine Learning

Learning goals

- Nonlinear Pipelines
- Targeting Columns

ADVANCED MACHINE LEARNING

Overview of PipeOps

Nonlinear Pipelines

Targeting Columns

Complex ML Pipelines and AutoML

Summary

“PIPELINES” DICTIONARY & SHORT FORM

Many frequently used *patterns* for pipelines

- Making Learners robust to bad data (imputation + feature encoding + . . .)
- Bagging
- Branching

Collection of these is in mlr3pipelines

```
head(as.data.table(mlr_pipeops), 5)[, list(key, input.num, output.num)]

#> Key: <key>
#>               key input.num output.num
#>            <char>     <int>      <int>
#> 1:         boxcox         1          1
#> 2:         branch         1         NA
#> 3:          chunk         1         NA
#> 4: classbalancing         1          1
#> 5:     classifavg        NA          1
```

“PIPELINES” DICTIONARY & SHORT FORM

Many frequently used *patterns* for pipelines

- Making Learners robust to bad data (imputation + feature encoding + ...)
- Bagging
- Branching

Collection of these is in mlr3pipelines

`po()` accesses the `mlr_pipeops` “Dictionary”.

```
pca = po("pca")
pca

#> PipeOp: <pca> (not trained)
#> values: <list()>
#> Input channels <name [train type, predict type]>:
#>   input [Task,Task]
#> Output channels <name [train type, predict type]>:
#>   output [Task,Task]
```

PIPEOPS SO FAR

```r
mlr_pipeops$keys()
```

```
#>  [1] "boxcox"                "branch"                "chunk"
#>  [4] "classbalancing"        "classifavg"            "classweights"
#>  [7] "colapply"              "collapsefactors"       "colroles"
#> [10] "copy"                  "datefeatures"          "encode"
#> [13] "encodeimpact"          "encodelmer"            "featureunion"
#> [16] "filter"                "fixfactors"            "histbin"
#> [19] "ica"                   "imputeconstant"        "imputehist"
#> [22] "imputelearner"         "imputemean"            "imputemedian"
#> [25] "imputemode"            "imputeoor"             "imputesample"
#> [28] "kernelpca"             "learner"               "learner_cv"
#> [31] "missind"               "modelmatrix"           "multiplicityexply"
#> [34] "multiplicityimply"     "mutate"                "nmf"
#> [37] "nop"                   "ovrsplit"              "ovrunite"
#> [40] "pca"                   "proxy"                 "quantilebin"
#> [43] "randomprojection"      "randomresponse"        "regravg"
#> [46] "removeconstants"       "renamecolumns"         "replicate"
#> [49] "scale"                 "scalemaxabs"           "scalerange"
#> [52] "select"                "smote"                 "spatialsign"
#> [55] "subsample"             "targetinvert"          "targetmutate"
#> [58] "targettrafoscalerange" "textvectorizer"        "threshold"
#> [...]
```

PIPEOPS SO FAR AND PLANNED

- Simple data preprocessing operations (scaling, Box Cox, Yeo Johnson, PCA, ICA)
- Missing value imputation (sampling, mean, median, mode, new level, ...)
- Feature selection (by name, by type, using filter methods)
- Categorical data encoding (one-hot, treatment, impact)
- Sampling (subsampling for speed, sampling for class balance)
- Ensemble methods on Predictions (weighted average, possibly learned weights)
- Branching (simultaneous branching, alternative branching)
- Combination of data: `featureunion`
- Text processing
- Date processing
- Time series and spatio-temporal data *(planned)*
- Multi-output and ordinal targets *(planned)*
- Outlier detection *(planned)*

ADVANCED MACHINE LEARNING

Overview of PipeOps

Nonlinear Pipelines

Targeting Columns

Complex ML Pipelines and AutoML

Summary

PIPEOPS WITH MULTIPLE INPUTS / OUTPUTS

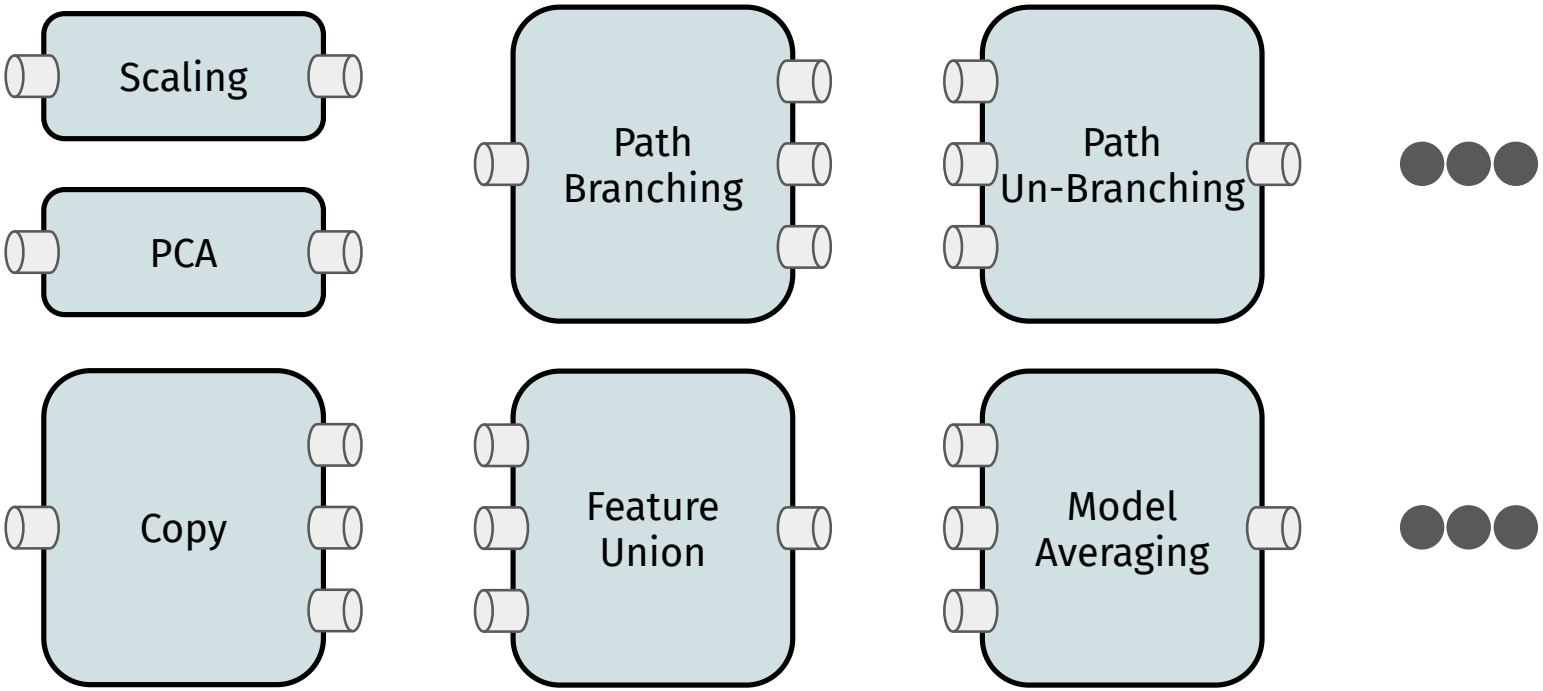

MLR3PIPELINES IN ACTION

Ensemble Method: Bagging

```
single_path = po("subsample") %>>% lrn("classif.rpart")
```

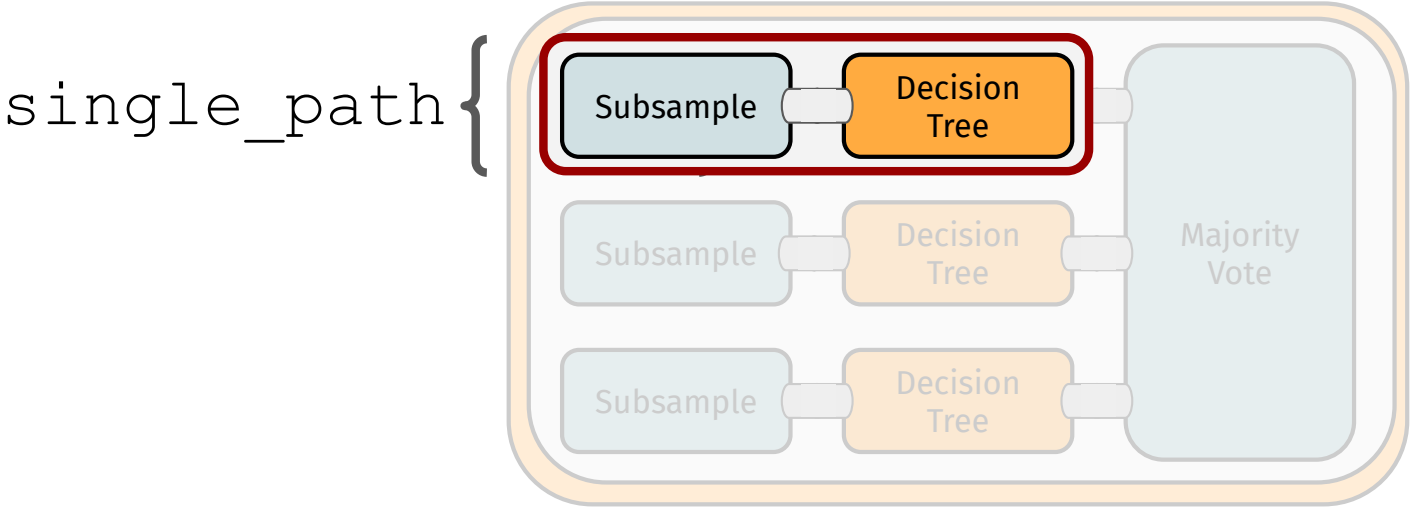

MLR3PIPELINES IN ACTION

Ensemble Method: Bagging

```
single_path = po("subsample") %>>% lrn("classif.rpart")

graph_bag = pipeline_greplicate(single_path, n = 3) %>>%
  po("classifavg")
```

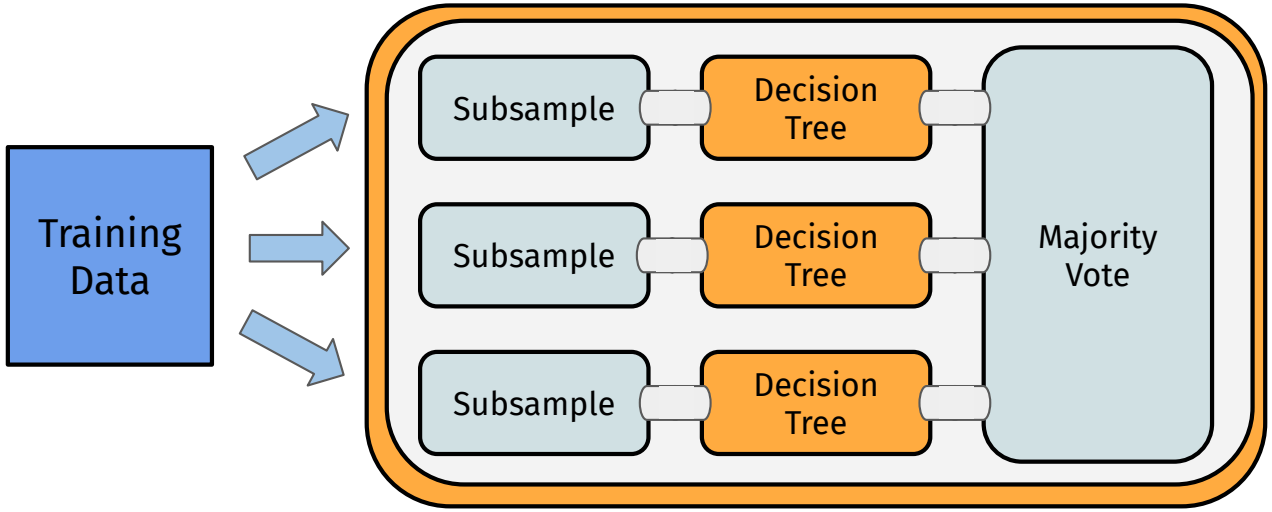

MLR3PIPELINES IN ACTION

Ensemble Method: Bagging

```
single_path = po("subsample") %>>% lrn("classif.rpart")

graph_bag = pipeline_greplicate(single_path, n = 3) %>>%
  po("classifavg")
```

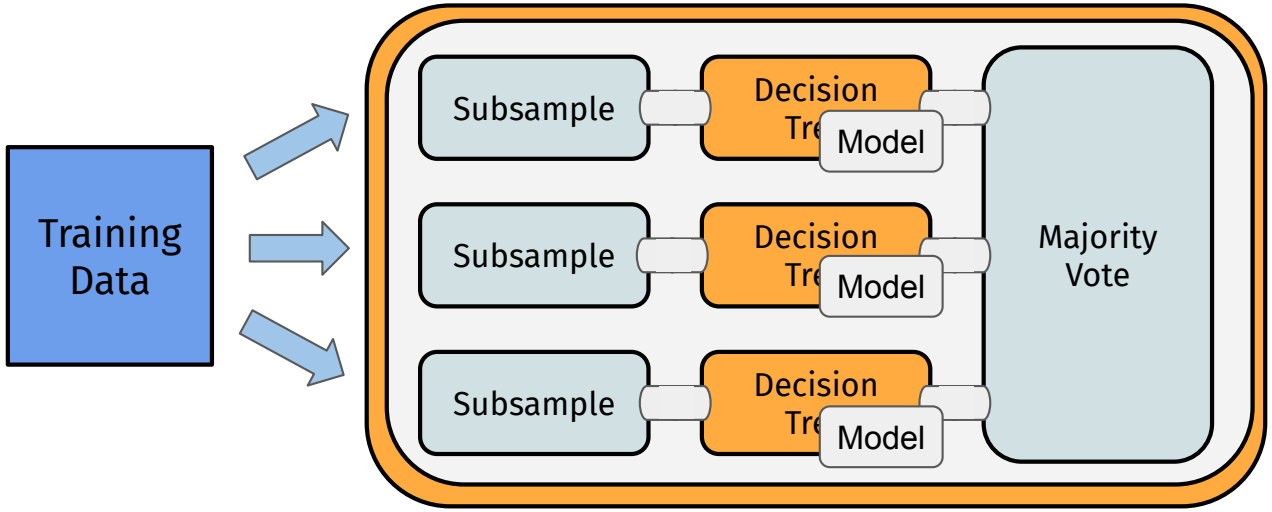

MLR3PIPELINES IN ACTION

Ensemble Method: Stacking

```
graph_stack = gunion(list(
      po("learner_cv", learner = lrn("regr.lm")),
      po("learner_cv", learner = lrn("regr.svm")),
      po("nop"))) %>>%
  po("featureunion") %>>%
  lrn("regr.ranger")
```

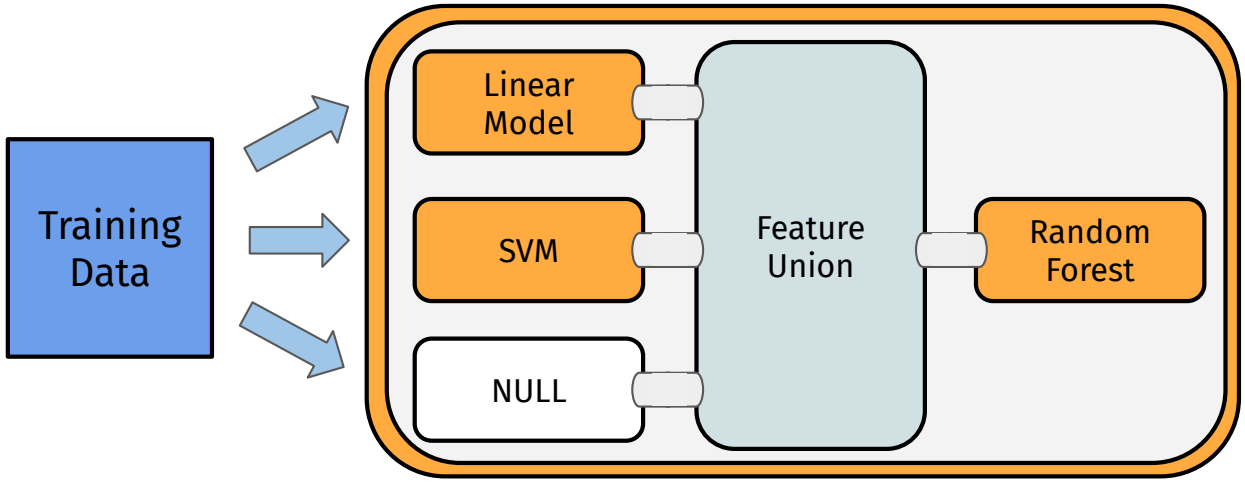

MLR3PIPELINES IN ACTION

Branching

```
graph_branch = ppl("branch", list(
  pca = po("pca"),
  ica = po("ica"))) %>>%
  lrn("classif.kknn")
```

Execute only one of several alternative paths

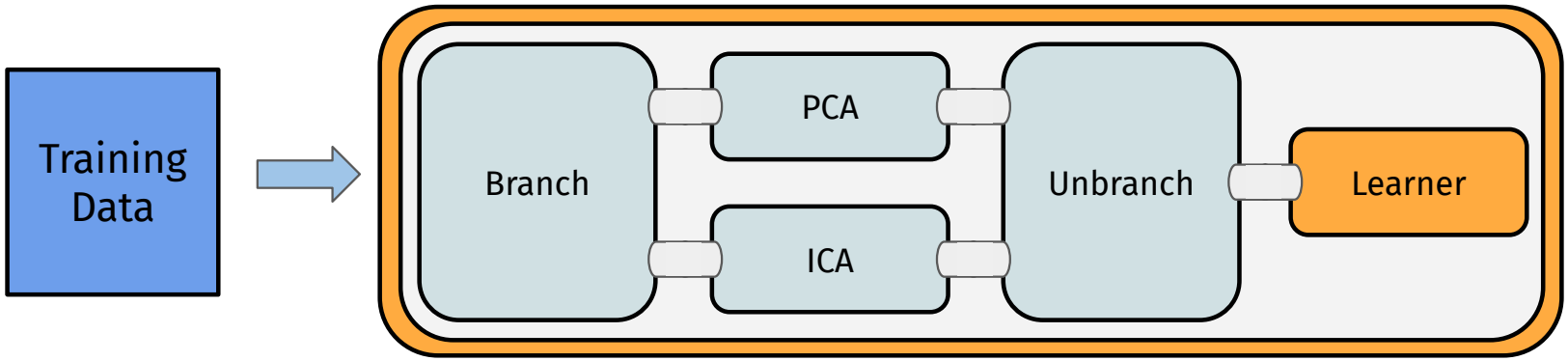

MLR3PIPELINES IN ACTION

Branching

```
graph_branch = ppl("branch", list(
  pca = po("pca"),
  ica = po("ica"))) %>>%
  lrn("classif.kknn")
```

```
> graph_branch$pipeops$branch$
    param_set$values$selection = "pca"
```

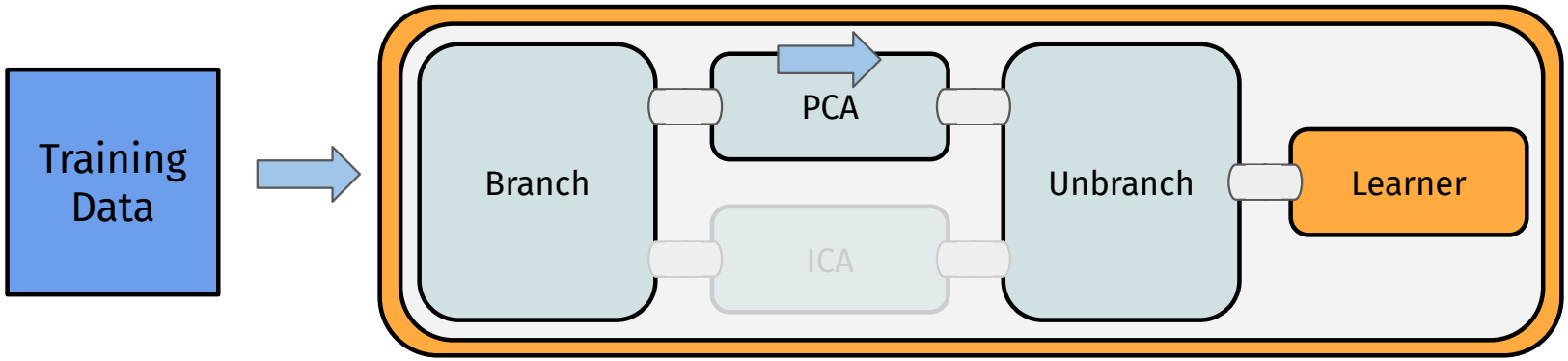

MLR3PIPELINES IN ACTION

Branching

```
graph_branch = ppl("branch", list(
  pca = po("pca"),
  ica = po("ica"))) %>>%
  lrn("classif.kknn")
```

```
> graph_branch$pipeops$branch$
    param_set$values$selection = "ica"
```

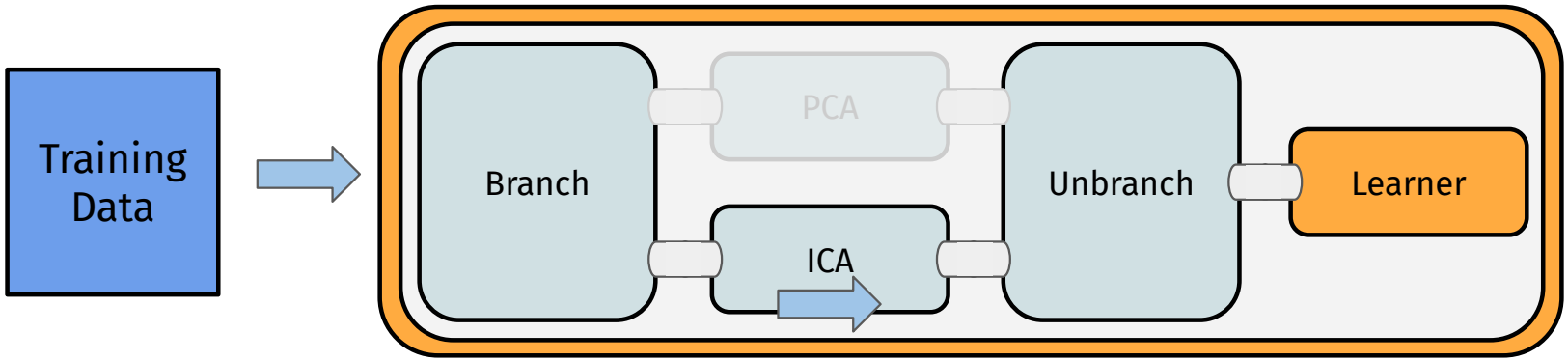

ADVANCED MACHINE LEARNING

Overview of PipeOps

Nonlinear Pipelines

Targeting Columns

Complex ML Pipelines and AutoML

Summary

TARGETING COLUMNS

Two ways of restricting actions to individual columns:

- Individual `PipeOps`: `affect_columns` parameter
- Subgraphs, `po("select")`, and `po("featureunion")`

⇒ Both make use of column `Selectors`

Suppose we only want PCA on some columns of our data:

```
task$data(1:9)

#>    Species Petal.Length Petal.Width Sepal.Length Sepal.Width
#>     <fctr>        <num>       <num>        <num>       <num>
#> 1:  setosa          1.4         0.2          5.1         3.5
#> 2:  setosa          1.4         0.2          4.9         3.0
#> 3:  setosa          1.3         0.2          4.7         3.2
#> 4:  setosa          1.5         0.2          4.6         3.1
#> 5:  setosa          1.4         0.2          5.0         3.6
#> 6:  setosa          1.7         0.4          5.4         3.9
#> 7:  setosa          1.4         0.3          4.6         3.4
#> 8:  setosa          1.5         0.2          5.0         3.4
#> 9:  setosa          1.4         0.2          4.4         2.9
```

TARGETING COLUMNS

Two ways of restricting actions to individual columns:

- Individual `PipeOps`: `affect_columns` parameter
- Subgraphs, `po("select")`, and `po("featureunion")`

⇒ Both make use of column `Selectors`

Using `affect_columns`:

```
sel = selector_grep("^Sepal")

partial_pca = po("pca", affect_columns = sel)

result = partial_pca$train(list(task))

result[[1]]$data(1:3)

#>    Species   PC1    PC2 Petal.Length Petal.Width
#>     <fctr> <num>  <num>        <num>       <num>
#> 1:  setosa -0.78  0.378          1.4         0.2
#> 2:  setosa -0.94 -0.137          1.4         0.2
#> 3:  setosa -1.15  0.045          1.3         0.2
```

TARGETING COLUMNS

Two ways of restricting actions to individual columns:

- Individual `PipeOps`: `affect_columns` parameter
- Subgraphs, `po("select")`, and `po("featureunion")`

⇒ Both make use of column `Selectors`

Using `po("select")`:

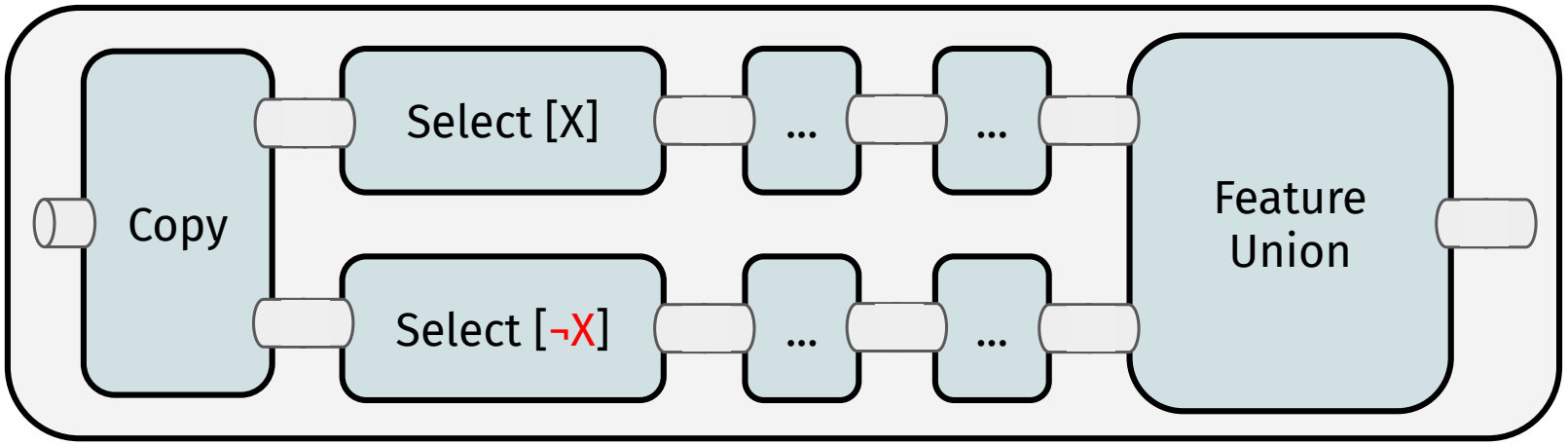

TARGETING COLUMNS

Two ways of restricting actions to individual columns:

- Individual `PipeOps`: `affect_columns` parameter
- Subgraphs, `po("select")`, and `po("featureunion")`

⇒ Both make use of column `Selectors`

Using `po("select")`:

```
sel = selector_grep("^Sepal")
selcomp = selector_invert(sel)

partial_pca = gunion(list(
  po("select", selector = sel) %>>% po("pca"),
  po("select", selector = selcomp, id = "select2"))) %>>%
  po("featureunion")

partial_pca$train(task)[[1]]$data(1:3)

#>    Species   PC1    PC2 Petal.Length Petal.Width
#>     <fctr> <num>  <num>        <num>       <num>
#> 1:  setosa -0.78  0.378          1.4         0.2
#> 2:  setosa -0.94 -0.137          1.4         0.2
#> 3:  setosa -1.15  0.045          1.3         0.2
```

ADVANCED MACHINE LEARNING

Overview of PipeOps

Nonlinear Pipelines

Targeting Columns

Complex ML Pipelines and AutoML

Summary

AUTOML <3 PIPELINES

- AutoML: Automatic Machine Learning
- Let the algorithm make decisions about
  1. *what learner* to use,
  2. *what preprocessing* to use, and
  3. *what hyperparameters* to use.
- (1) and (2) are decisions about *graph structure* in `mlr3pipelines`

$\Rightarrow$ The problem reduces to **pipelines + parameter tuning**

AUTOML WITH MLR3PIPELINES

AutoML in a Nutshell

- Preprocessing steps
- ML Algorithms
- Tuner

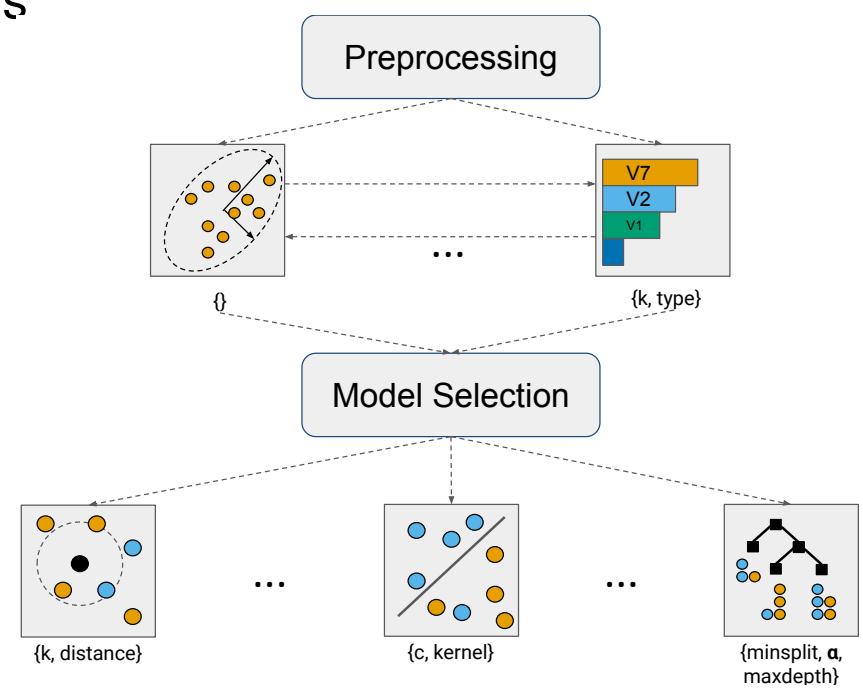

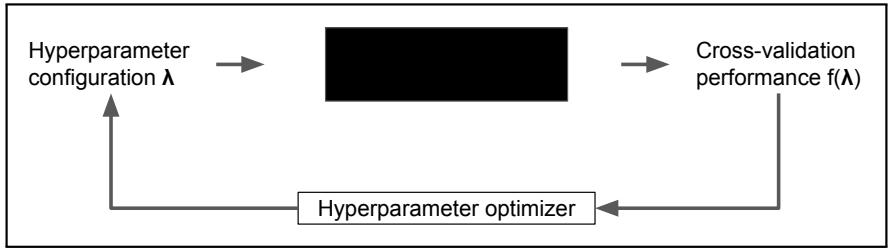

PIPELINES TUNING

- Works **exactly** as in basic `mlr3` / `mlr3tuning`
- `PipeOps` have *hyperparameters* (using `paradox` pkg)
- `Graphs` have hyperparameters of all components *combined*
- ⇒ Joint **tuning** and nested CV of complete graph

```
p1 = ppl("branch", list(
  "pca" = po("pca"),
  "nothing" = po("nop")
))
p2 = flt("anova")
p3 = ppl("branch", list(
  "svm" = lrn("classif.svm", id = "svm", kernel = "radial",
    type = "C-classification"),
  "xgb" = lrn("classif.xgboost", id = "xgb"),
  "rf" = lrn("classif.ranger",  id = "rf")
), prefix_branchops = "lrn_")
gr = p1 %>>% p2 %>>% p3
glrn = as_learner(gr)
```

PIPELINES TUNING

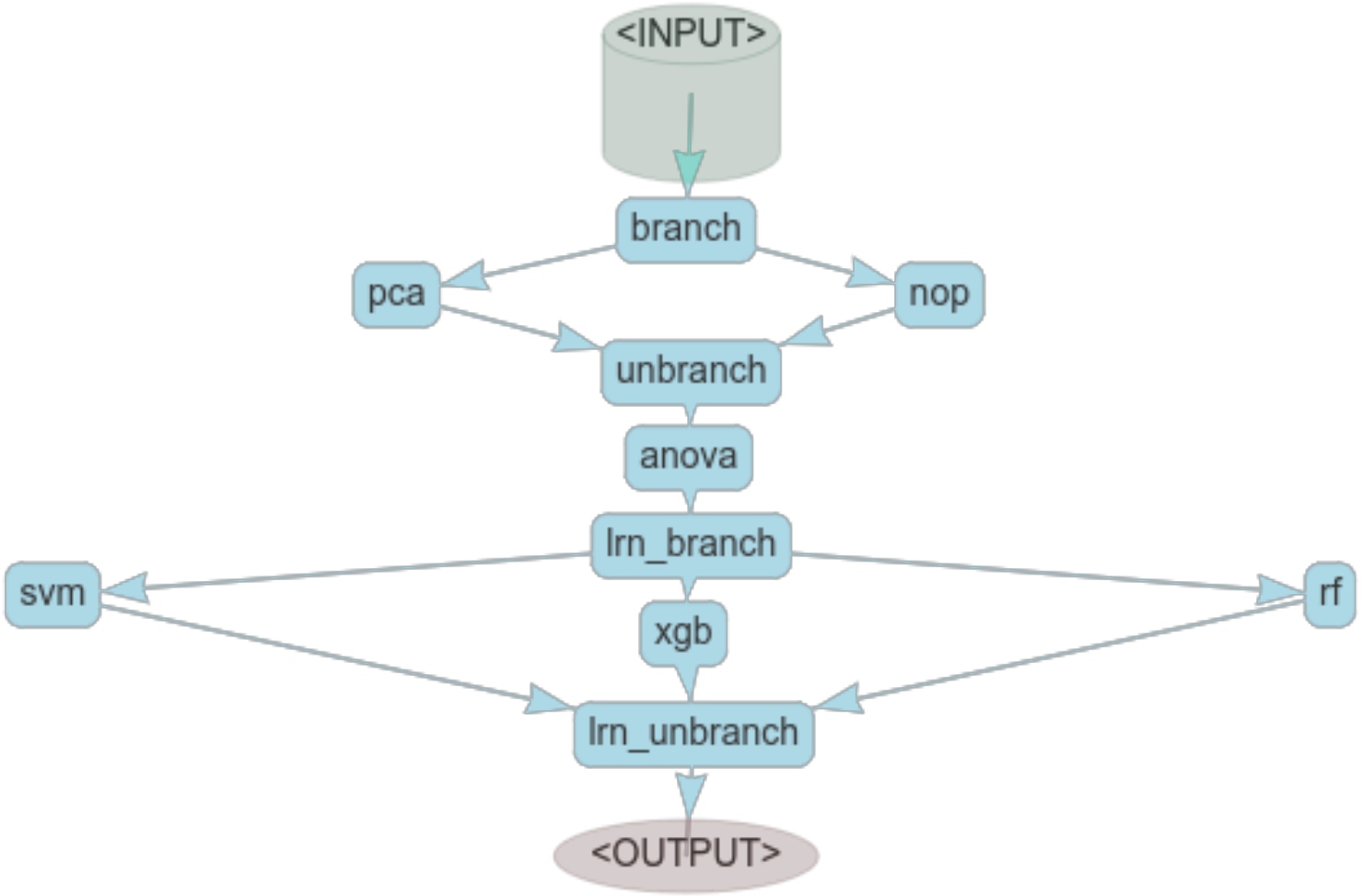

PIPELINES TUNING

```r
ps = ps(
  branch.selection = p_fct(levels = c("pca", "nothing")),
  anova.filter.frac = p_dbl(lower = 0.1, upper = 1),
  lrn_branch.selection = p_fct(levels = c("svm", "xgb", "rf")),
  rf.mtry.ratio = p_int(lower = 1L, upper = 20L, trafo = function(x) 1/x,
    depends = lrn_branch.selection == "rf" ),
  xgb.nrounds = p_int(lower = 1, upper = 500,
    depends = lrn_branch.selection == "xgb"),
  svm.cost = p_dbl(lower = -12, upper = 4, trafo = function(x) 2^x,
    depends = lrn_branch.selection == "svm"),
  svm.gamma = p_dbl(lower = -12, upper = -1, trafo = function(x) 2^x,
    depends = lrn_branch.selection == "svm"))

inst = ti(task = tsk("sonar"), learner = glrn,
  resampling = rsmp("cv", folds = 3), measures =  msr("classif.ce"),
  terminator = trm("evals", n_evals = 10), search_space = ps)

gsearch = tnr("random_search")
gsearch$optimize(inst)
```

ADVANCED MACHINE LEARNING

Overview of PipeOps

Nonlinear Pipelines

Targeting Columns

Complex ML Pipelines and AutoML

Summary

MLR3PIPELINES

`mlr3pipelines` overview:

- Construct a `PipeOp` using `po()`
- Use `Graph` operators to connect them
  - `%>>%`—chain operations
  - `gunion()`—put operations in parallel
  - `pipeline_greplicate()`—put many copies of an operation in parallel
- Train/predict with the `PipeOp` or `Graph` using `$train()`/`$predict()`
- Inspect the trained state through `$state`
- Encapsulate the `Graph` in a `GraphLearner` for resampling, benchmarking, and tuning

MLR3(PIPELINES) RESOURCES

mlr3 book

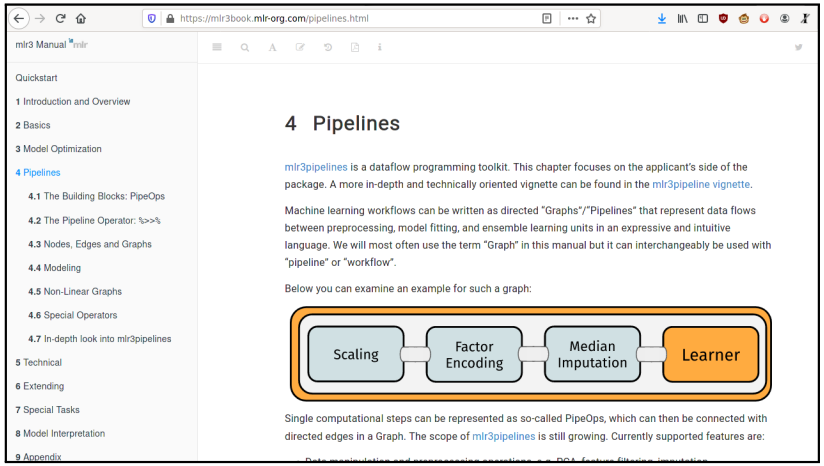

https://mlr3book.mlr-org.com/

mlr3 Use Case "Gallery"

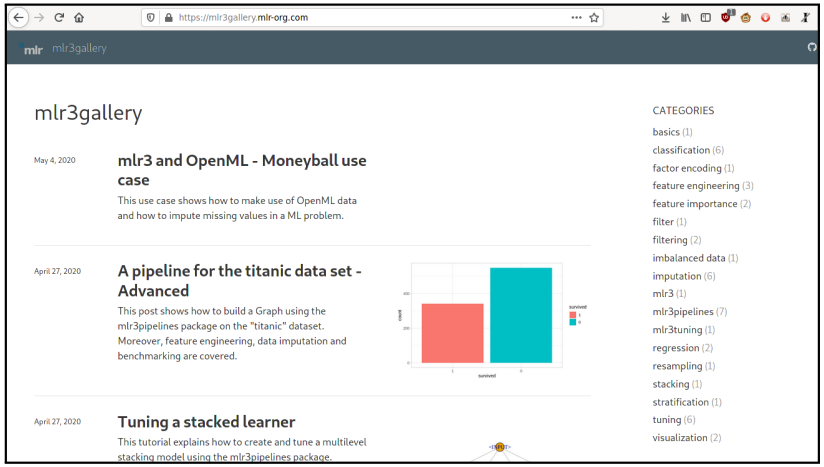

https://mlr3gallery.mlr-org.com/

"cheat sheets"

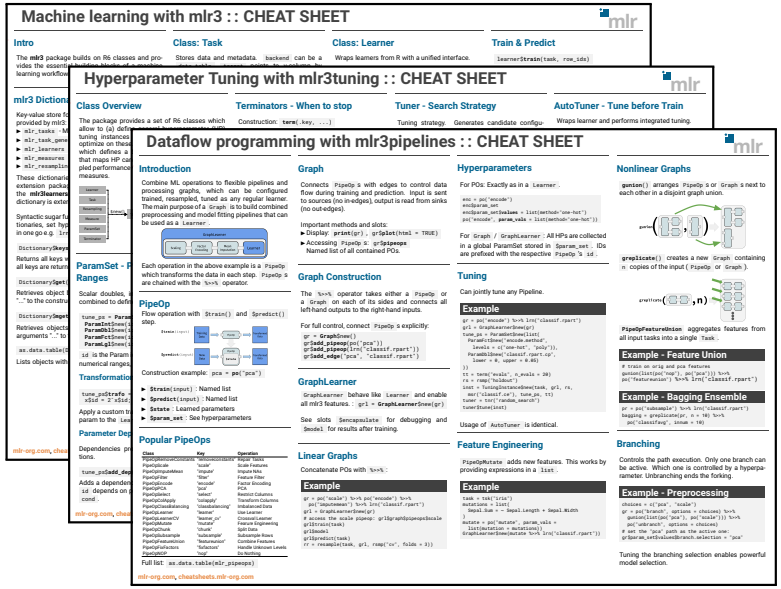

https://cheatsheets.mlr-org.com/