Interpretable Machine Learning

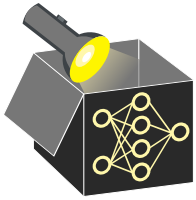

Random Planted Forests

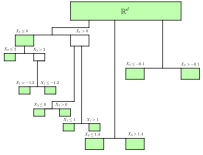

Learning goals

- Motivation for RPFs
- Understand node types and restricting interactions in decision trees
- Understand planted trees: non-binary decision trees and inner leaves

RANDOM PLANTED FORESTS (RPF) ▸ Hiabu et al. 2023

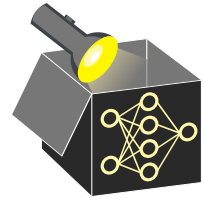

Goal: Create a powerful tree ensemble, but still interpretable
Idea:

- GAMs easily interpretable, because no interaction $\rightsquigarrow$ Plot 1D functions

$$\hat{f}(x) = \theta_0 + f_1(x_1) + f_2(x_2) + \ldots + f_p(x_p),$$

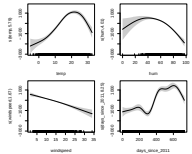

- Same for function containing interactions between max. 2 features
  $\rightsquigarrow$ function of 2 features, Plot 2D functions (i.e. 3D plot)

$$\hat{f}(x) = \theta_0 + f_1(x_1) + f_2(x_2) + \ldots + f_p(x_p) + f_{1,2}(x_1, x_2) + \ldots + f_{1,p}(x_1, x_p) + \ldots + f_{p-1,p}(x_{p-1}, x_p),$$

$\rightsquigarrow$ Visualize single functions $f_1, f_2, f_{1,2}(x_1, x_2), f_{1,3}(x_1, x_3) \ldots$

$\Rightarrow$ Interpretability possible via restricting degree of interactions
Problem: How to know degree of interactions?
Solution: Easy to determine for trees / tree ensembles!

RPF: DETERMINE INTERACTION TYPE IN TREES

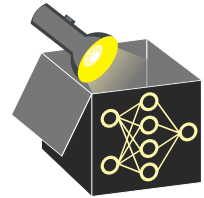

Define the *interaction type t* of a node as the subset of features involved in constructing this node.

Example:

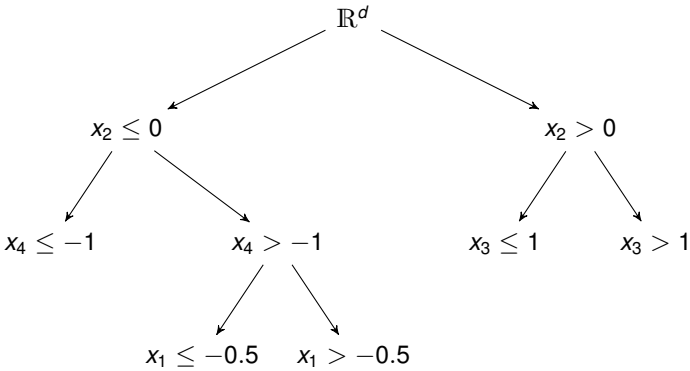

RPF: DETERMINE INTERACTION TYPE IN TREES

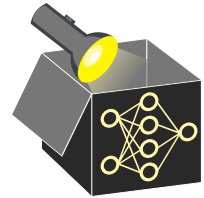

Define the *interaction type* t of a node as the subset of features involved in constructing this node.

Example:

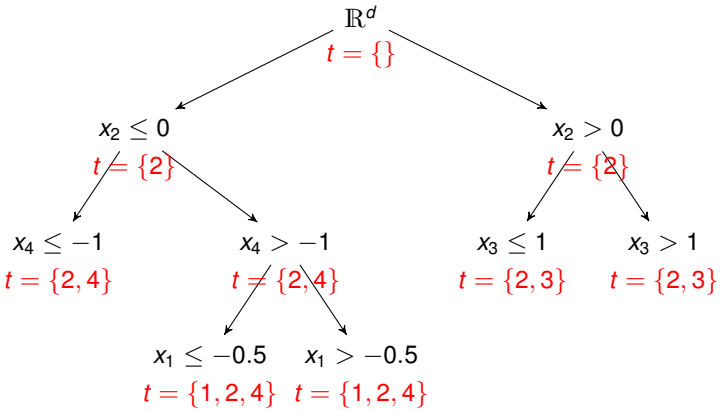

$\Rightarrow$ Degree of interaction in each node is $|t|$.

RPF: BOUNDED INTERACTION ORDER + PLANTED TREES

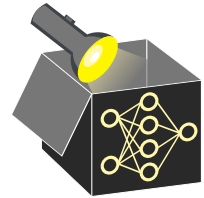

Goal: restrict this interaction degree

$\rightsquigarrow$ In RPFs:

- Always keep track of interaction type in each node
- For each new split, make sure max. degree of interactions is not exceeded $\Rightarrow$ When max. number of features reached, no new features are allowed

Problem: For small interaction order, single trees quickly limited

- E.g. interaction order 1: Every tree only one feature

$\Rightarrow$ Many trees needed for more complex model

Idea: Allow inner nodes to split again

Define *Planted Trees*: Decision trees in which each inner nodes can be *leaves*:

- Add prediction to final output
- Can be split again $\Rightarrow$ several splits possible

RPF: EXAMPLE

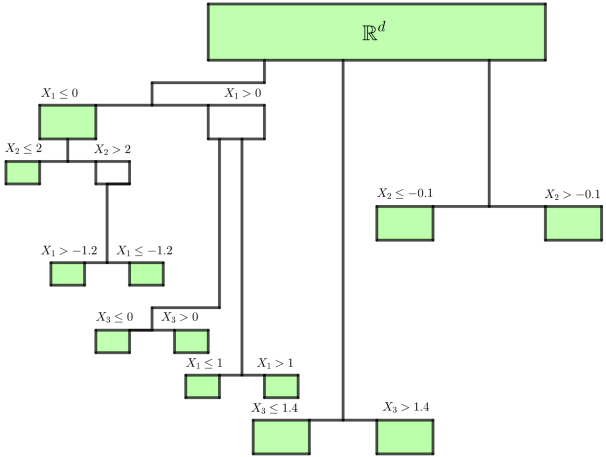

Figure: Example of a single fully grown planted tree, green nodes: “leaves”

RPF: EXAMPLE

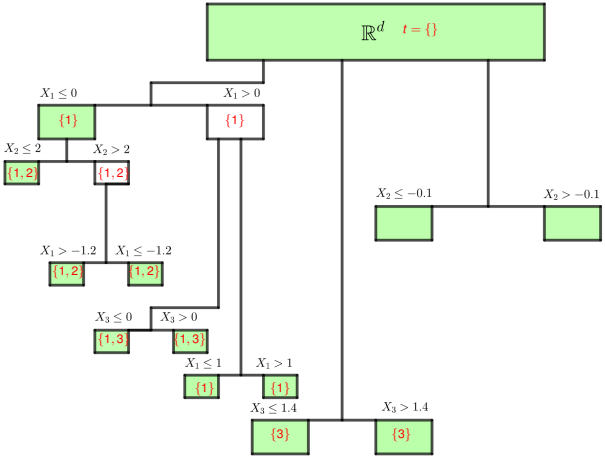

Figure: Example of a single fully grown planted tree, green nodes: “leaves”

RPF: ALGO

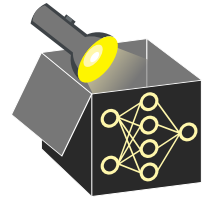

- Max. interaction degree is a hyperparameter
- Total number of trees is a hyperparameter
- End growing tree after max. total number of splits instead of max. depth (min. number of samples also possible, but then higher nodes would split too often)
- Randomization as in Random Forests:
  - Only optimize over subset of features, randomly chosen
  - Only optimize over subset of possible split values
- Make an inner leaf an inner node (i.e. delete “leaf” property), if it has children with the same type

RPF: EXAMPLE RESULTS AND INTERPRETATION
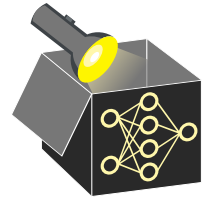
RPF: CONCLUSION