CALIBRATION

- Consider binary classification with a probabilistic score classifier

$$f(\mathbf{x}) = 2 \cdot \mathbb{1}_{[s(\mathbf{x}) \geq c]} - 1,$$

leading to the prediction random variable $\hat{y} = f(\mathbf{x})$. Let $\mathbf{S} = s(\mathbf{x})$ be the score random variable.

- f is calibrated iff $P(y = 1 \mid \mathbf{S} = s) = s$ for all $s \in [0, 1]$.
- Different *post-processing* methods have been proposed for the purpose of calibration, i.e., to construct a *calibration function*

$$C : \mathbb{S} \to [0, 1],$$

such that $C(s(\mathbf{x}))$ is well-calibrated. Here, $\mathbb{S}$ is the possible score set of the classifier (the image of s).

- For learning C, a set of *calibration data* is used:

$$\mathcal{D}_{cal} = \{(s^{(1)}, y^{(1)}), \ldots, (s^{(N)}, y^{(N)})\} \subset \mathbb{S} \times \{-1, 1\}$$

- This data should be different from the training data used to learn the scoring classifier. Otherwise, there is a risk of introducing a bias.

Advanced Machine Learning
Fairness in Machine Learning: Calibration
Learning goals
- Get to know the three common methods for calibration

EMPIRICAL BINNING AND PLATT SCALING

- *Binning* offers a first obvious approach. Partition $\mathbb{S}$ into bins (intervals) $B_1, \ldots, B_M$, and define $C(s) = \bar{p}_{J(s)}$, where $J(s)$ denotes the index of the bin of s (i.e., $s \in B_{J(s)}$), and leading to the prediction random variable $\hat{y} = f(\mathbf{x})$. Let $\mathbf{S} = s(\mathbf{x})$ be the score random variable.
- f is calibrated iff $P(y = +1 \mid \mathbf{S} = s) = s$ for all $s \in [0, 1]$.
- Different *post-processing* methods have been proposed for the purpose of calibration, i.e., to construct a calibration function $C : \mathbb{S} \to [0, 1]$ such that $C(s(\mathbf{x}))$ is well-calibrated. Here, $\mathbb{S}$ is the possible score set of the classifier (the image of s).
- For learning C, a set of *calibration data* is used:

$$\mathcal{D}_{cal} = \{(s^{(1)}, y^{(1)}), \ldots, (s^{(N)}, y^{(N)})\} \subset \mathbb{S} \times \{-1, 1\}$$

- This data should be different from the training data used to learn the scoring classifier. Otherwise, there is a risk of introducing a bias.

$$f(\mathbf{x}) = 2 \cdot \mathbb{1}_{[s(\mathbf{x}) \geq c]} - 1,$$

$$\bar{p}_m = \frac{\sum_{n=1}^{N} \mathbb{1}_{[s^{(n)} \in B_m,\, y^{(n)} = +1]}}{\sum_{n=1}^{N} \mathbb{1}_{[s^{(n)} \in B_m]}}$$

is the average proportion of positives in bin B_m.

- Another method is *Platt scaling*, which essentially applies logistic regression to predicted scores $s \in \mathbb{R}$, i.e., it fits a calibration function C such that

$$C(s) = \frac{1}{1 + \exp(\gamma + \theta \cdot s)},$$

minimizing log-loss on $\mathcal{D}_{cal}$.

ISOTONIC REGRESSION AND PLATT SCALING

- The sigmoidal transformation fit by Platt scaling is appropriate for some methods (e.g., support vector machines) but not for others.
- *Isotonic regression* combines the nonparametric character of binning with Platt scaling's guarantee of monotonicity.
- Isotonic regression minimizes

$$\sum_{n=1}^{N} w_n \left(C(s^{(n)}) - y^{(n)}\right)^2,$$

  subject to the constraint that C is isotonic: $C(s) \leq C(t)$ for $s < t$.
- Note that C is evaluated only at a finite number of points; in-between, one may (linearly) interpolate or assume a piecewise constant function.

PAIR-ADJACENT VIOLATORS ALGORITHM (PAVA)

- Let the scores observed for calibration be sorted (and without ties), such that $s^{(1)} < s^{(2)} < \ldots < s^{(N)}$
- We then seek values $c_1 \leq c_2 \leq \ldots \leq c_N$ which minimize

$$\sum_{n=1}^{N} w_n (c_n - y^{(n)})^2$$

- Initialize one block B_n for each observation $(s^{(n)}, y^{(n)})$; the value of the block is $c(B_n) = y^{(n)}$ and the width is $w(B_n) = 1$.
- A merge operation combines two blocks B' and B'' into a new block B with width $w(B) = w(B') + w(B'')$ and value

$$c = \frac{w(B')c(B') + w(B'')c(B'')}{w(B') + w(B'')} .$$

PAIR-ADJACENT VIOLATORS ALGORITHM (PAVA)

- PAVA iterates the following steps (the description is somewhat simplified to avoid notational overload):
  - **(1)** Find the first violating pair, namely, adjacent blocks B_i and B_{i+1} such that $c_i > c_{i+1}$; if there is no such pair, then stop.
  - **(2)** Merge B_i and B_{i+1} into a new block B.
  - **(3)** If $c(B) < c(B_{i-1})$ for the left neighbor block B_{i-1}, merge also these blocks and continue doing so until no more violations are encountered.
  - **(4)** Continue with (1).
- Initialize blocks $B_1, \ldots, B_N$ for each observation $(s^{(n)}, y^{(n)})$; the value of the block is $c(B_n) = y^{(n)}$ and the width is $w(B_n) = 1$.
- A merge operation combines two blocks B' and B'' into a new block B with width $w(B) = w(B') + w(B'')$ and value

$$c = \frac{w(B')c(B') + w(B'')c(B'')}{w(B') + w(B'')} .$$

PAIR-ADJACENT VIOLATORS ALGORITHM (PAVA)

- PAVA iterates the following steps (the description is somewhat simplified to avoid notational overload):

  (1) Find the first violating pair, namely, adjacent blocks B_i and B_{i+1} such that $c_i > c_{i+1}$; if there is no such pair, then stop.
  (2) Merge B_i and B_{i+1} into a new block B.
  (3) If $c(B) < c(B_{i-1})$ for the left neighbor block B_{i-1}, merge also these blocks and continue doing so until no more violations are encountered.
  (4) Continue with (1).

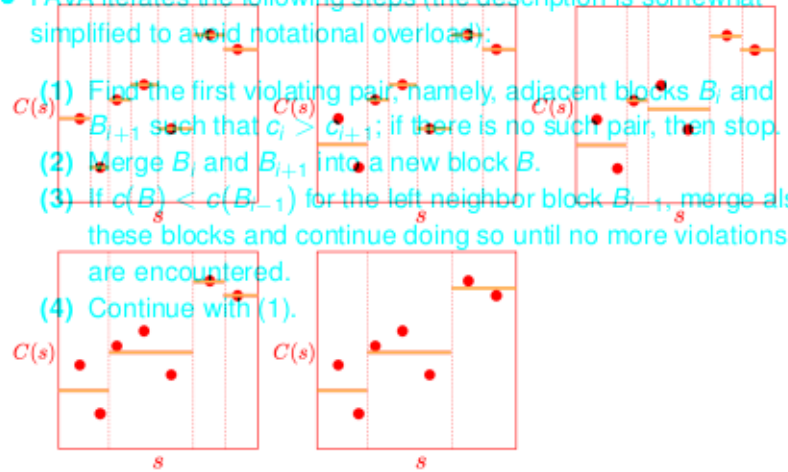

PAIR-ADJACENT VIOLATORS ALGORITHM (PAVA)

- Note that, in the case of binary classification, the target values $y^{(n)}$ are all in $\{0, 1\}$:

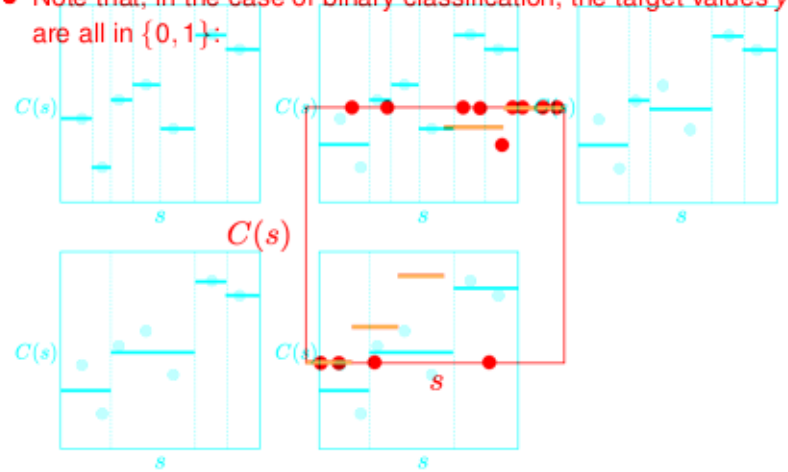

MULTI-CLASS CALIBRATION

- Calibration methods also exist for the multi-class case (i.e. classification problems with more than two classes).
- Then, however, the problem becomes conceptually more difficult (and is still a topic of ongoing research).
- While essentially coinciding for binary classification, the following definitions of calibration (leading to increasingly difficult problems) can be distinguished for more than two classes:
  - Calibration of the highest predicted probability (confidence calibration)
  - Calibration of the marginal probabilities (class-wise calibration)
  - Calibration of the entire vector of predicted probabilities (multi-class calibration)

MULTI-CLASS CALIBRATION

- Calibration methods also exist for the multi-class case (i.e., classification problems with more than two classes).
- Then, however, the problem becomes conceptually more difficult (and is still a topic of ongoing research).
- While essentially coinciding for binary classification, the following definitions of calibration (leading to increasingly difficult problems) can be distinguished for more than two classes:
  - Calibration of the highest predicted probability (confidence calibration)
  - Calibration of the marginal probabilities (class-wise calibration)
  - Calibration of the entire vector of predicted probabilities (multi-class calibration)