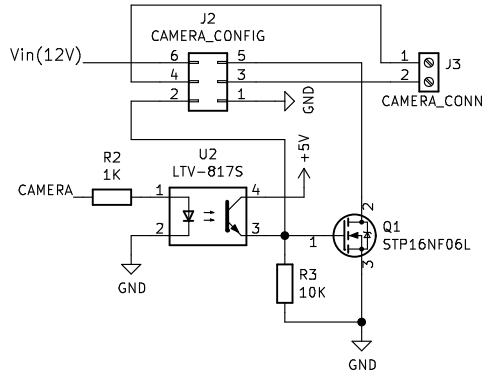

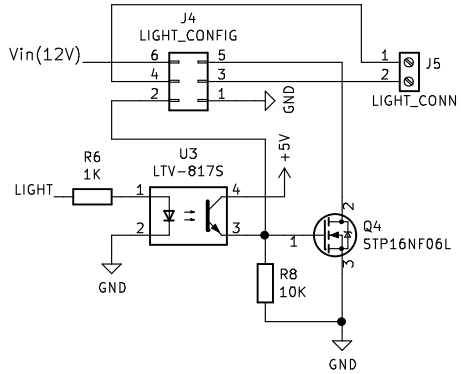

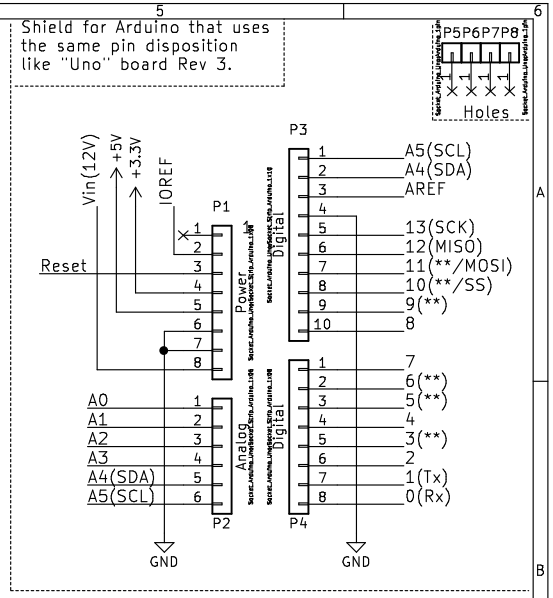

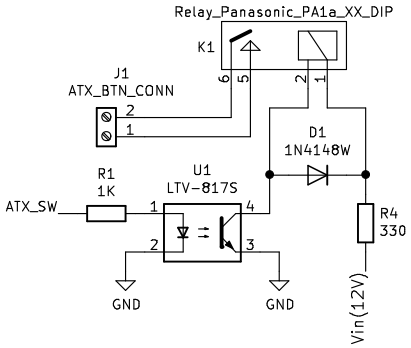

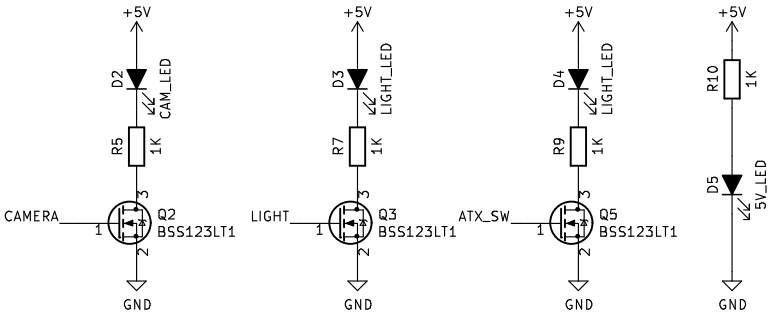

CAMERA 3(**)
LIGHT 5(**)
ATX_SW 6(**)

Sheet: /
File: portal_shield_for_arduino.sch

Title:

Size: A4	Date: lun. 30 mars 2015	**Rev:**
KiCad E.D.A. kicad 5.0.2+dfsg1-1		Id: 1/1