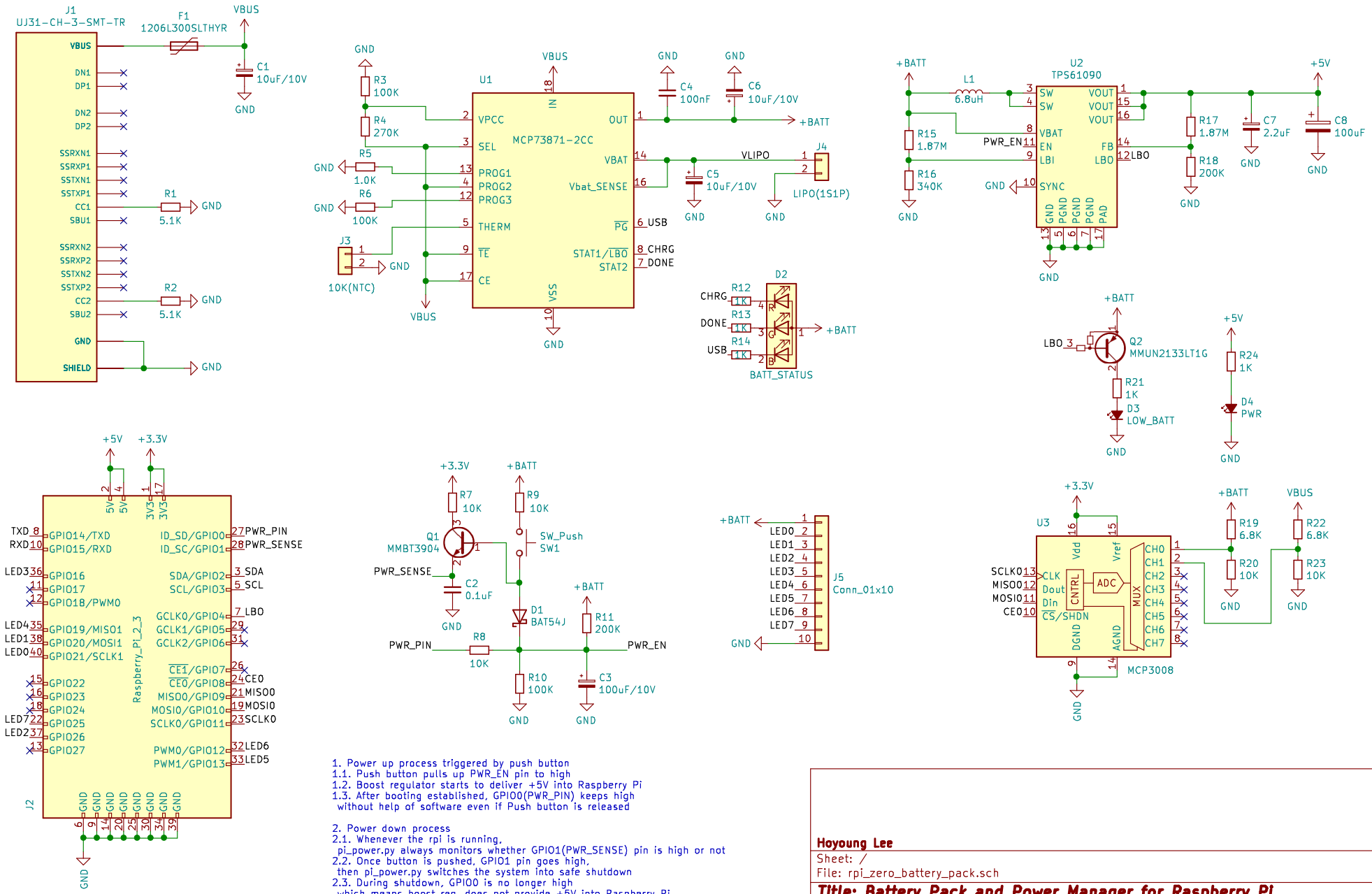

1. Power up process triggered by push button
1.1. Push button pulls up PWR_EN pin to high
1.2. Boost regulator starts to deliver +5V into Raspberry Pi
1.3. After booting established, GPIO0(PWR_PIN) keeps high
without help of software even if Push button is released

2. Power down process
2.1. Whenever the rpi is running,
pi_power.py always monitors whether GPIO1(PWR_SENSE) pin is high or not
2.2. Once button is pushed, GPIO1 pin goes high,
then pi_power.py switches the system into safe shutdown
2.3. During shutdown, GPIO0 is no longer high
which means boost reg. does not provide +5V into Raspberry Pi

Hoyoung Lee

Sheet: /
File: rpi_zero_battery_pack.sch

Title: Battery Pack and Power Manager for Raspberry Pi

Size: A4	Date: 2021-01-03	Rev: 0.1
KiCad E.D.A. kicad 5.1.9+dfsg1-1		Id: 1/1