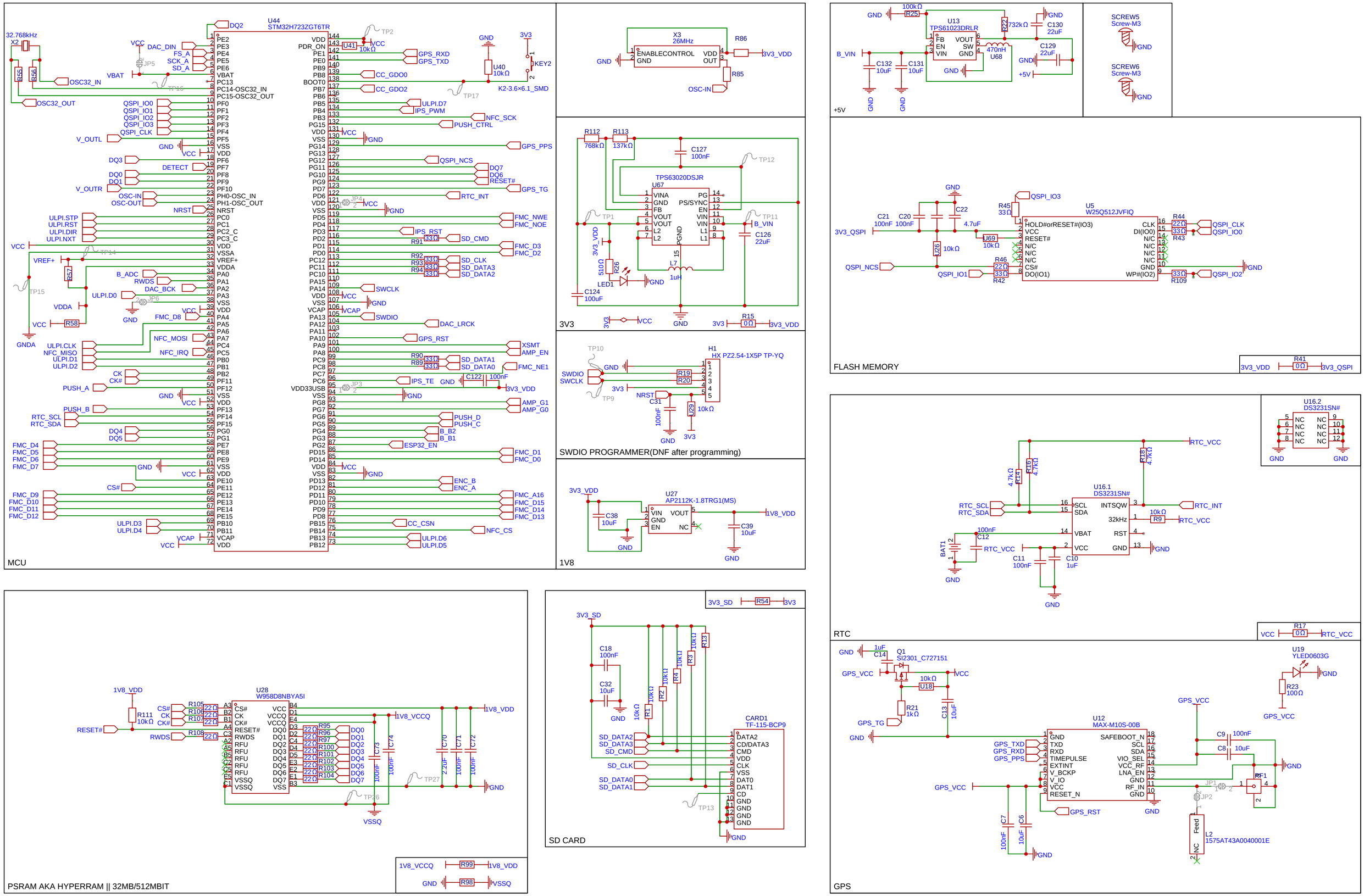

TITLE: MyOwnMP3_PCB

REV: 1.0

Company: Your Company

Sheet: 1/1

Date: 2026-02-21

Drawn By: maxyusyuk

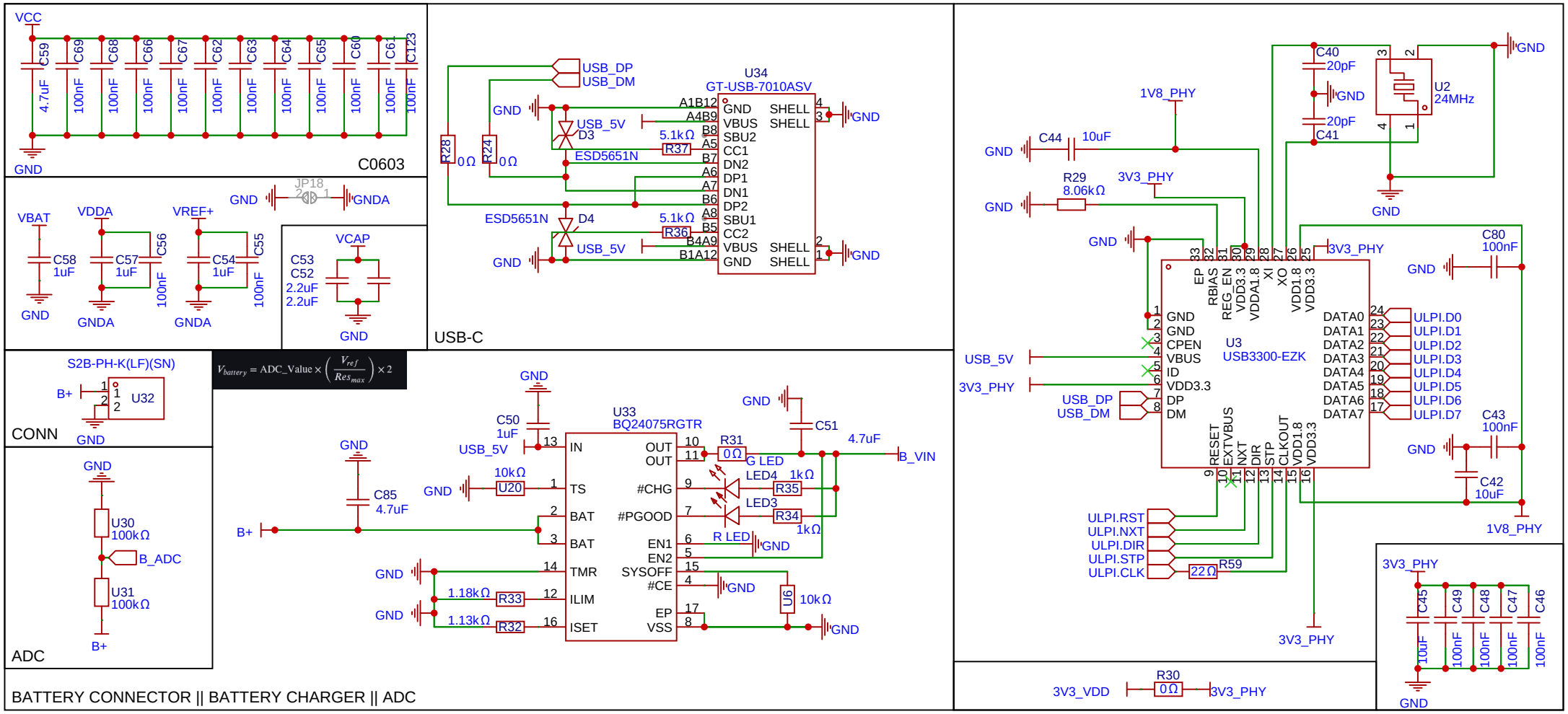

TITLE: MyOwnMP3_PCB		REV: 1.0
EasyEDA	Company: Your Company	Sheet: 1/1
	Date: 2026-02-28 Drawn By: maxyusyuk	

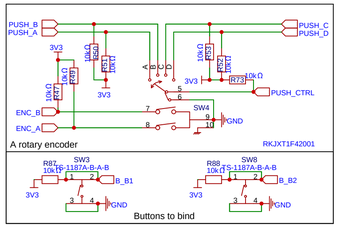

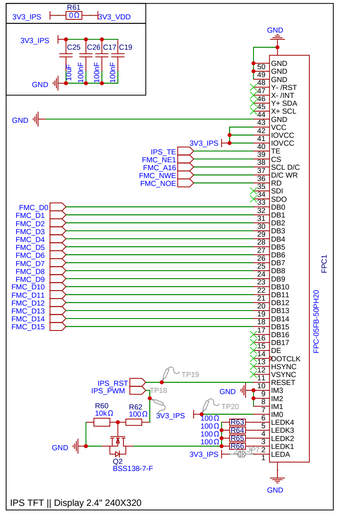

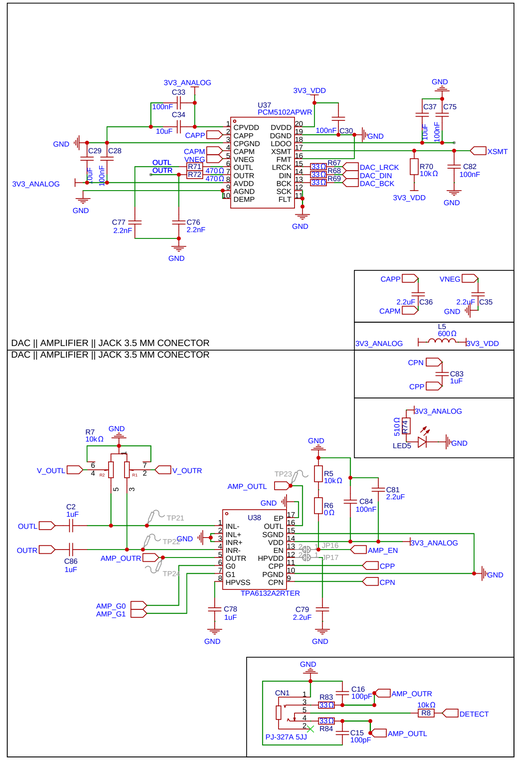

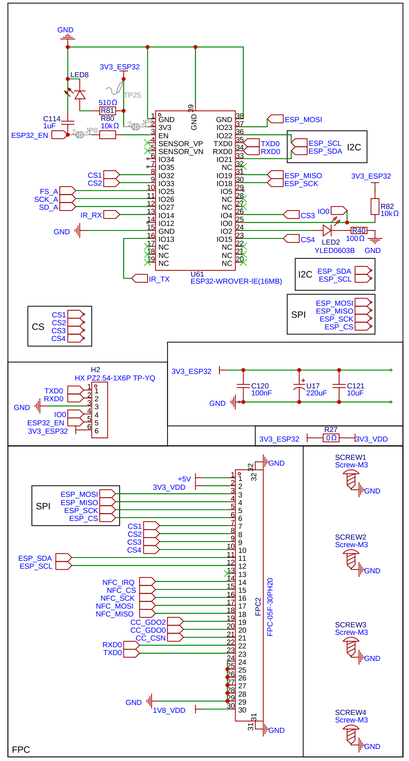

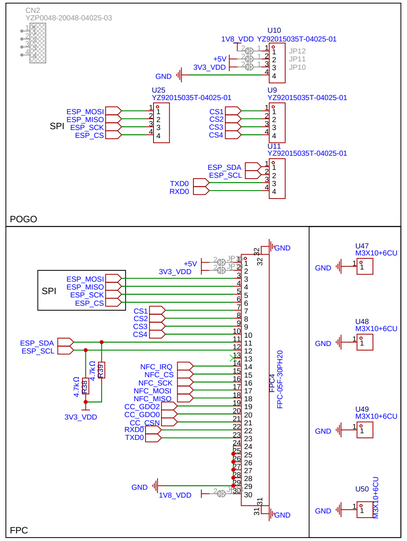

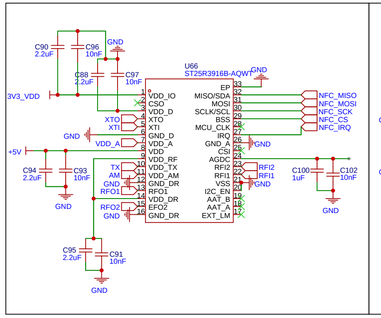

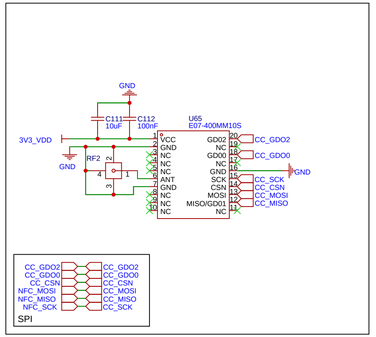

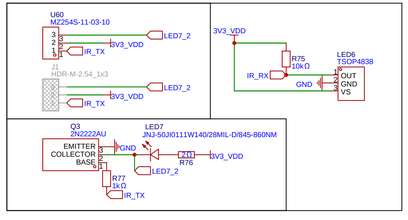

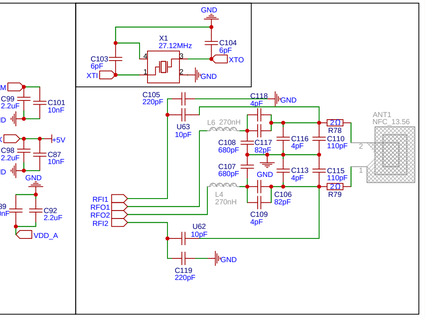

TITLE: MyOwnMP3_PCB			REV: 1.0
EasyEDA	Company: Your Company		Sheet: 1/1
	Date: 2026-02-28	Drawn By: maxyusyuk	