Part List	
ART	DESCRIPTION
2030020	CFS-BL - HNA
3530250	FS-ONE MAX 20oz foil

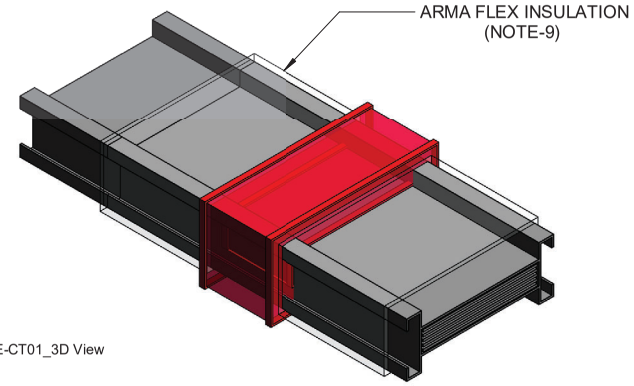

E-CT01_3D View

CFS-BL - HNA - E-CT01(Approval 20406C)

ITEM DESCRIPTION	SUPPORT	HEIGHT	WIDTH	Count
P00				
CFS-BL - HNA	E-CT01_01	180	450	1
CFS-BL - HNA	E-CT01_02	180	290	1
CFS-BL - HNA	E-CT01_03	180	290	1
CFS-BL - HNA	E-CT01_04	180	290	1
CFS-BL - HNA	E-CT01_05	180	290	1
CFS-BL - HNA	E-CT01_06	180	290	2
CFS-BL - HNA	E-CT01_07	180	450	1
CFS-BL - HNA	E-CT01_08	180	290	1
CFS-BL - HNA	E-CT01_09	180	450	1
CFS-BL - HNA	E-CT01_10	180	290	1
CFS-BL - HNA	E-CT01_11	180	290	7
CFS-BL - HNA	E-CT01_12	180	290	5
CFS-BL - HNA	E-CT01_13	180	290	1
CFS-BL - HNA	E-CT01_14	180	290	1
CFS-BL - HNA	E-CT01_15	180	290	1
CFS-BL - HNA	E-CT01_16	180	290	1
CFS-BL - HNA	E-CT01_17	180	290	1
CFS-BL - HNA	E-CT01_18	180	290	1
CFS-BL - HNA	E-CT01_19	180	290	2
CFS-BL - HNA	E-CT01_20	180	290	1
CFS-BL - HNA	E-CT01_21	180	290	1
CFS-BL - HNA	E-CT01_22	180	290	1

Drawing Notes:

1. Fire Rating upto 60 Minutes as long as the application/ installation complies to Hilti approval 20406C, as per ETA 13/0099 (CFS-BL), EN1366-3, EN13501-1 & EN13501-2 guidelines.

2. Panel Joints Stitching: Where openings bisect joints in the sandwich panels, the joints must be stitched with self-drilling screws every 150mm to a length of 600mm on each side of the opening.

3. Maximum Wall Opening size: 1200mm (width) x 1000mm (height)

4. The first support of busbar from sandwich panel surface shall be ≤ 525mm

5. Separation distances of services within the seal
Busbar - Busbar Separation ≥ As per busbar manufacturer recommendation
Busbar - Seal Edge Separation ≥ 25mm

6. Separation distances between adjacent seals
CFS-BL - Adjacent Seals ≥ 100mm

7. Hilti Firestop Block Seal (CFS-BL) Dimensions (Thickness : 200mm, Width 130mm, Height: 50mm), centrally positioned inside the aperture of sandwich panel, stacked in a staggered manner by friction and pressure between bricks and aperture edge. CFS-BL is installed at 130mm Depth into the wall

8. [NOT SHOWN] Hilti CFS-S-ACR fire protection acrylic should be used in all vertical butt joints in the area of the sheet metal cladding, between angle and wall prior to fixing.

9. [BY OTHERS] Busbar locally wrapped with foamed elastomeric rubber insulation on either side of penetration seal, Insulation Thickness= 32 mm, Insulation Length= 500 mm. "Busbar + Insulation" cross sectional area should not exceed 60% of the penetration area.

10. FSONEMAX shall be filled at a depth of 15mm & width 5mm to fill all visible annular gaps, between busbar and block seal; and block seal and aperture edge in the supporting construction

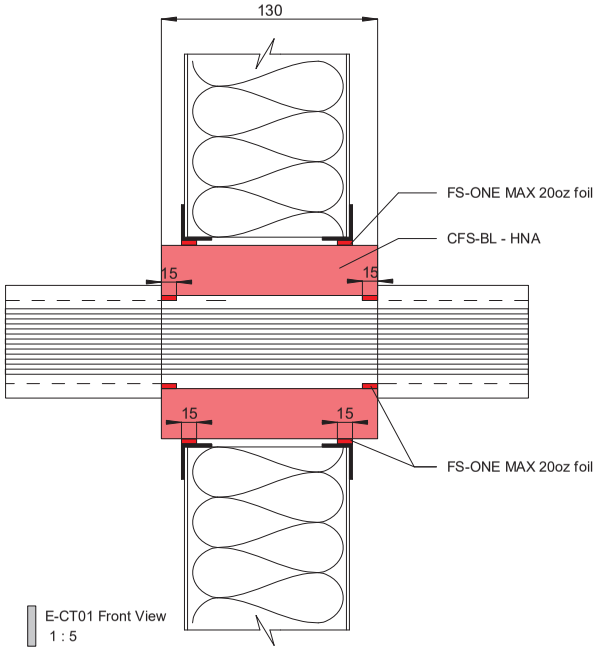

E-CT01 Front View
1 : 5

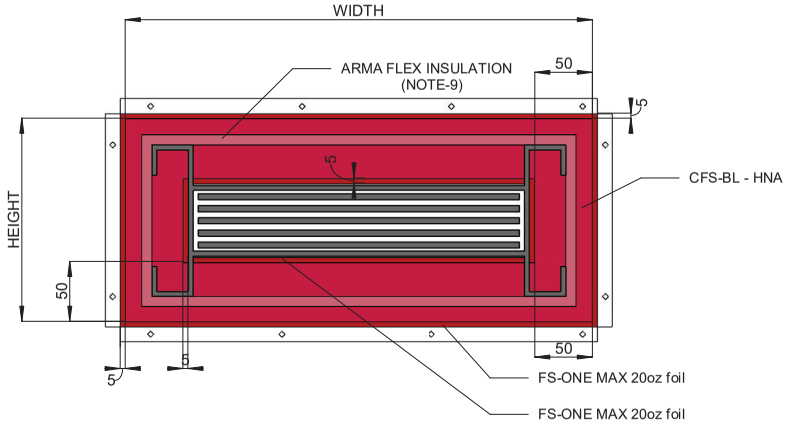

E-CT01 Right View

Revision				
P02	21-11-23	ISSUED FOR REVIEW	S.S	E.P
P01	09-11-23	ISSUED FOR REVIEW	S.S	E.P
P00	27-10-23	ISSUED FOR REVIEW	S.S	E.P
Rev.	Date	Description	Created by	Approved by

Disclaimer

All rights reserved for Hilti. Design refers to Hilti items and may not be transferred to products of other manufacturers. Loading and design criteria provided by Hilti engineer or customer are assumed accurate and not verified within execution.
Hilti technical documentation to be used as basis or item selection. Any modification may alter performance and must be evaluated by Hilti engineer or customer.

General notes

1. Dimensions are in millimeters unless otherwise indicated.
2. Cutting and assembly tolerance is ±5 mm unless otherwise indicated.
3. Refer to Instructions for Use for correct installation.
4. Auxiliary dimensions are represented in italic small fonts.
5. Check dimensions are represented in bold big fonts.
6. Parametric or not to scale dimensions are represented in underlined fonts.
7. CT - cutting type.
8. Legend: channel opening - position marker - Kitting -

Project: Equinix IL4_ Data Center Project				
Client: REC ULUSLARARASI			Orthographic projection: First-angle	
Title, Supplementary title: E-CT01			Document type: SHOP DRAWINGS	
Approved by: EREN.P			Date of issue: 21/11/2023	Rev.: P02
Created by: SATISH.S				
Format: A3	Scale: 1 : 5	Status: WIP	Sheet: 1/1	Drawing number: FS-SO-NL2535_023

E-CT01

DISCLAIMER: ETA and above stated approvals in "drawing notes" supersede any shop drawings provided.