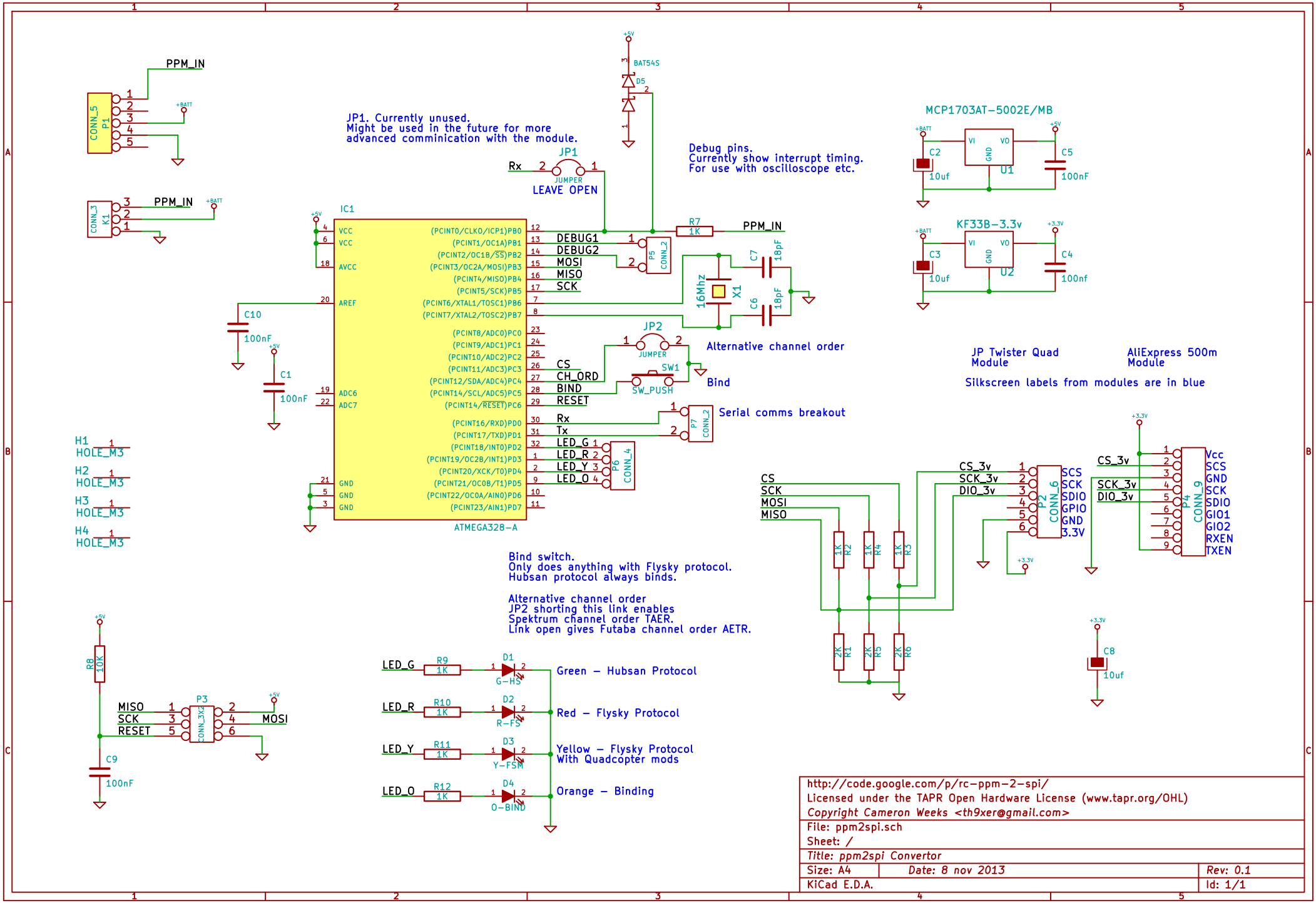

http://code.google.com/p/rc-ppm-2-spi/
Licensed under the TAPR Open Hardware License (www.tapr.org/OHL)
Copyright Cameron Weeks <th9xer@gmail.com>

File: ppm2spi.sch
Sheet: /
Title: ppm2spi Convertor

Size: A4	*Date: 8 nov 2013*	*Rev: 0.1*
KiCad E.D.A.		Id: 1/1