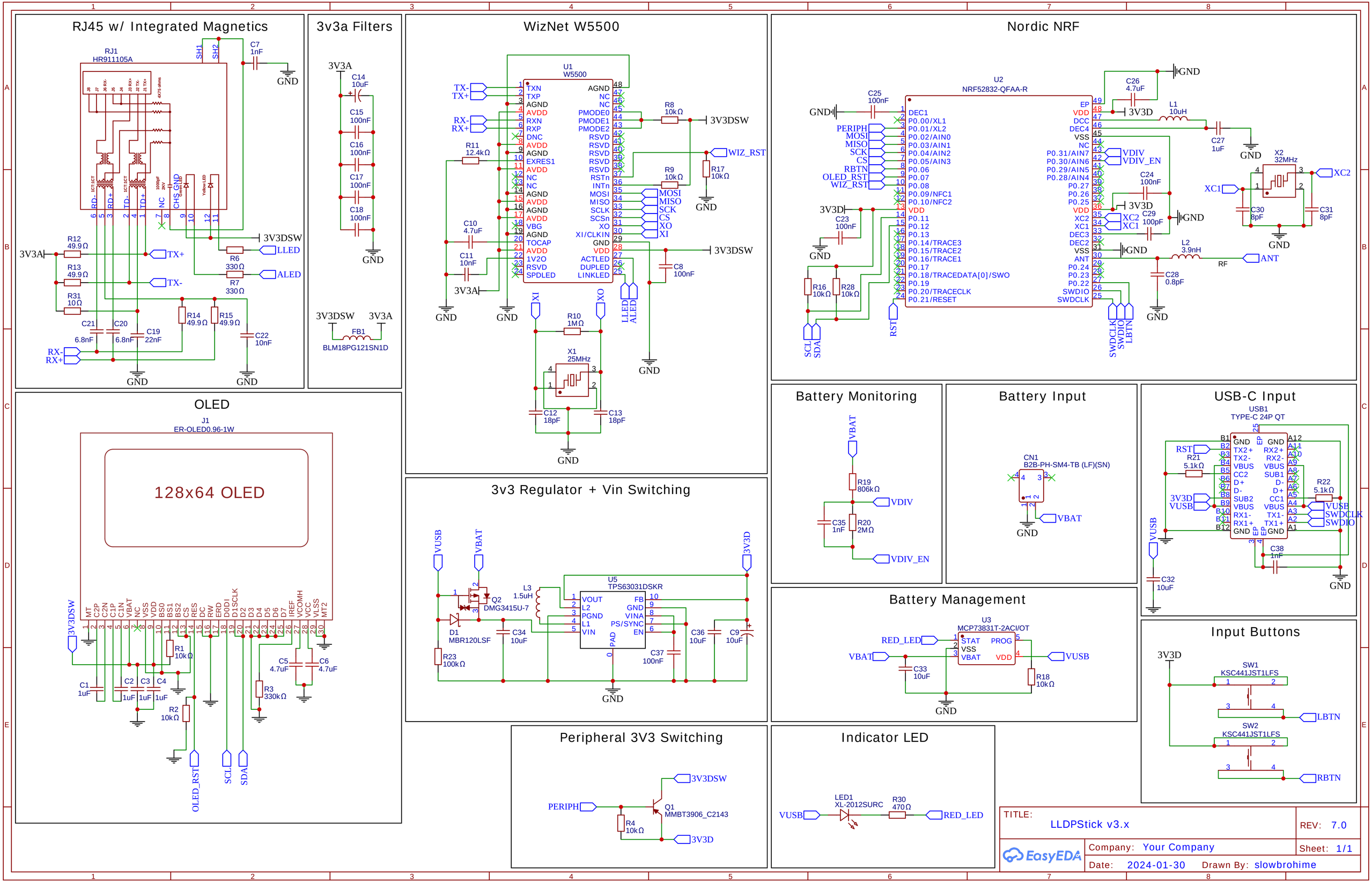
RJ45 w/ Integrated Magnetics
RJ1
HR911105A
C7
1nF
GND
3V3DSW
LLED
ALED
TX+
TX-
RX-
RX+
R12
49.9Ω
R13
49.9Ω
R31
10Ω
R6
330Ω
R7
330Ω
R14
49.9Ω
R15
49.9Ω
C21
6.8nF
C20
6.8nF
C19
22nF
C22
10nF
3v3a Filters
3V3A
C14
10uF
C15
100nF
C16
100nF
C17
100nF
C18
100nF
3V3DSW
3V3A
FB1
BLM18PG121SN1D
WizNet W5500
U1
W5500
TX-
TX+
RX-
RX+
R11
12.4kΩ
C10
4.7uF
C11
10nF
R8
10kΩ
R9
10kΩ
WIZ_RST
R17
10kΩ
C8
100nF
MOSI
MISO
SCK
CS
XO
XI
LLED
ALED
R10
1MΩ
X1
25MHz
C12
18pF
C13
18pF
Nordic NRF
U2
NRF52832-QFAA-R
C25
100nF
C26
4.7uF
L1
10uH
C27
1uF
C24
100nF
C29
100pF
C23
100nF
R16
10kΩ
R28
10kΩ
X2
32MHz
XC1
XC2
C30
8pF
C31
8pF
L2
3.9nH
C28
0.8pF
RF
ANT
PERIPH
OLED_RST
WIZ_RST
VDIV
VDIV_EN
SCL
SDA
RST
SWDCLK
SWDIO
LBTN
OLED
J1
ER-OLED0.96-1W
128x64 OLED
R1
10kΩ
R2
10kΩ
R3
330kΩ
C1
1uF
C2
1uF
C3
1uF
C4
1uF
C5
4.7uF
C6
4.7uF
3V3DSW
OLED_RST
SCL
SDA
3v3 Regulator + Vin Switching
VUSB
VBAT
3V3D
Q2
DMG3415U-7
L3
1.5uH
U5
TPS63031DSKR
D1
MBR120LSF
C34
10uF
R23
100kΩ
C36
10uF
C9
10uF
C37
100nF
Battery Monitoring
VBAT
R19
806kΩ
C35
1nF
R20
2MΩ
VDIV
VDIV_EN
Battery Input
CN1
B2B-PH-SM4-TB (LF)(SN)
VBAT
USB-C Input
USB1
TYPE-C 24P QT
RST
R21
5.1kΩ
R22
5.1kΩ
3V3D
VUSB
VUSB
SWDCLK
SWDIO
C38
1nF
C32
10uF
Battery Management
U3
MCP73831T-2ACI/OT
RED_LED
VBAT
C33
10uF
R18
10kΩ
VUSB
Input Buttons
3V3D
SW1
KSC441JST1LFS
SW2
KSC441JST1LFS
LBTN
RBTN
Peripheral 3V3 Switching
PERIPH
R4
10kΩ
Q1
MMBT3906_C2143
3V3DSW
3V3D
Indicator LED
VUSB
LED1
XL-2012SURC
R30
470Ω
RED_LED
TITLE:
LLDPStick v3.x
REV: 7.0
Company: Your Company
Sheet: 1/1
Date: 2024-01-30
Drawn By: slowbrohime
EasyEDA