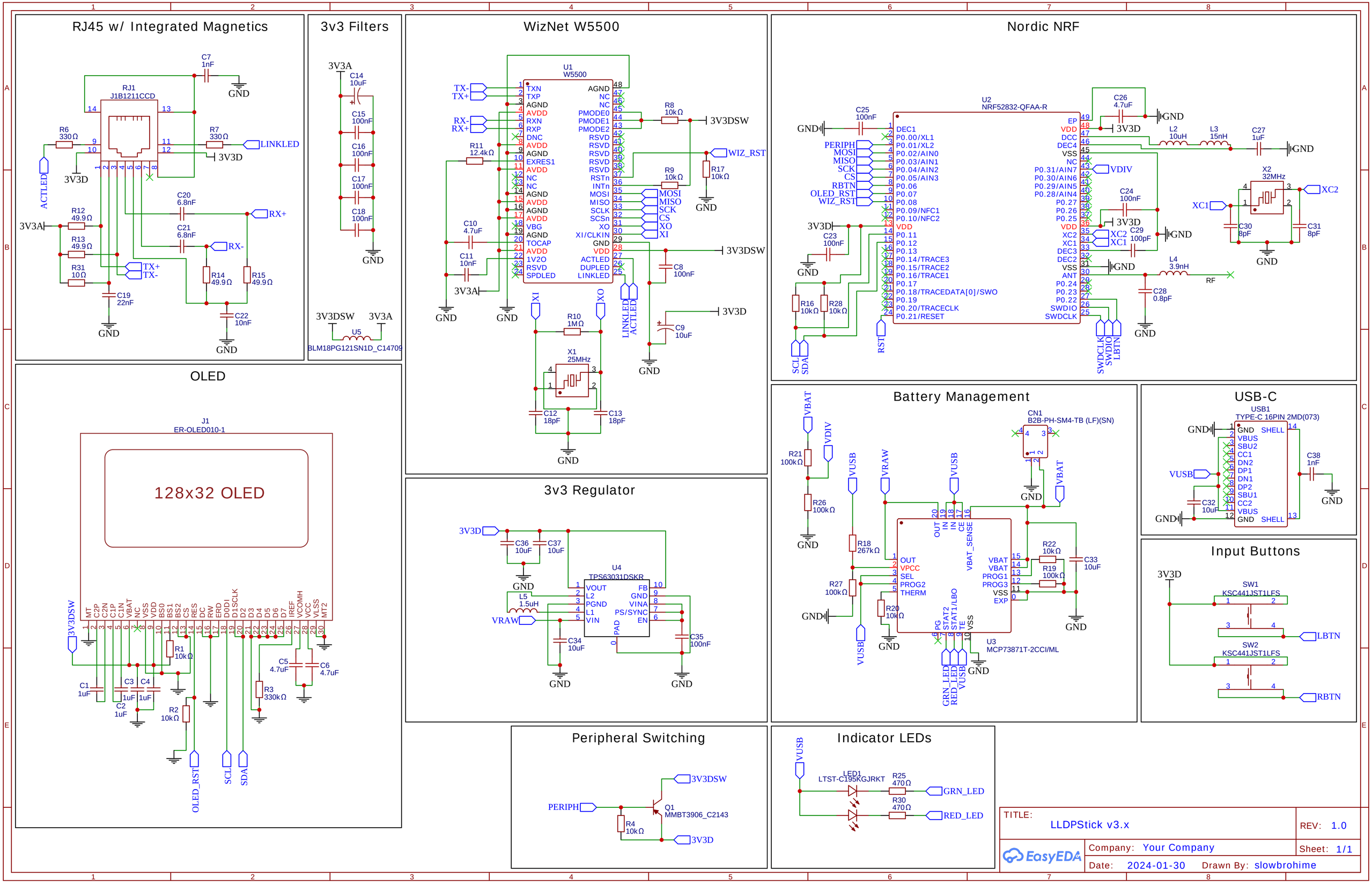

TITLE: LLDPStick v3.x	REV: 1.0
Company: Your Company	Sheet: 1/1
Date: 2024-01-30 Drawn By: slowbrohime	