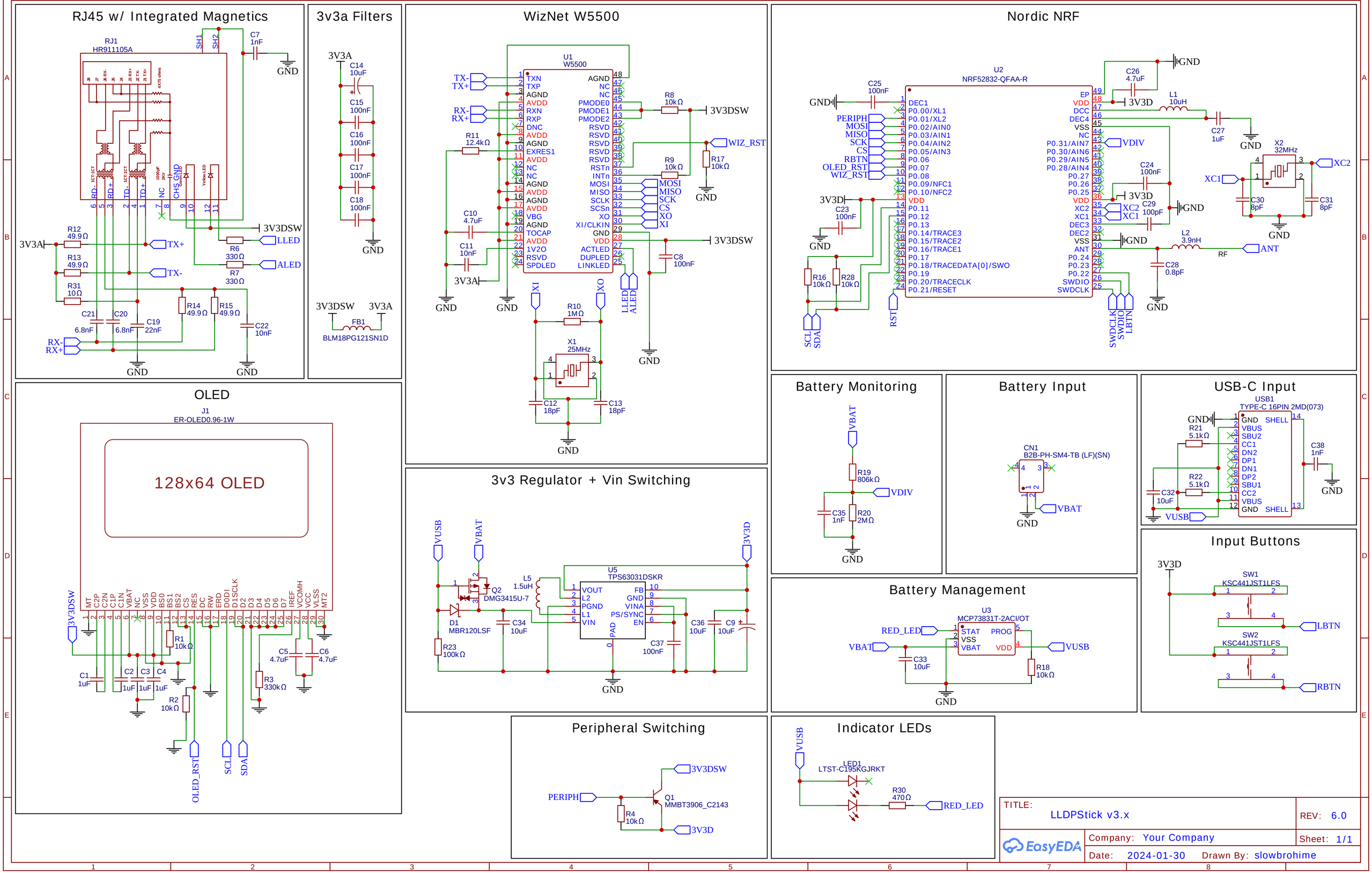
RJ45 w/ Integrated Magnetics
RJ1
HR911105A
3v3a Filters
WizNet W5500
U1
W5500
Nordic NRF
U2
NRF52832-QFAA-R
OLED
J1
ER-OLED0.96-1W
128x64 OLED
3v3 Regulator + Vin Switching
U5
TPS63031DSKR
Battery Monitoring
Battery Input
CN1
B2B-PH-SM4-TB (LF)(SN)
USB-C Input
USB1
TYPE-C 16PIN 2MD(073)
Input Buttons
SW1
KSC441JST1LFS
SW2
KSC441JST1LFS
Battery Management
U3
MCP73831T-2ACI/OT
Peripheral Switching
Q1
MMBT3906_C2143
Indicator LEDs
LED1
LTST-C195KGJRKT
TITLE:
LLDPStick v3.x
REV: 6.0
Company: Your Company
Sheet: 1/1
Date: 2024-01-30
Drawn By: slowbrohime
EasyEDA