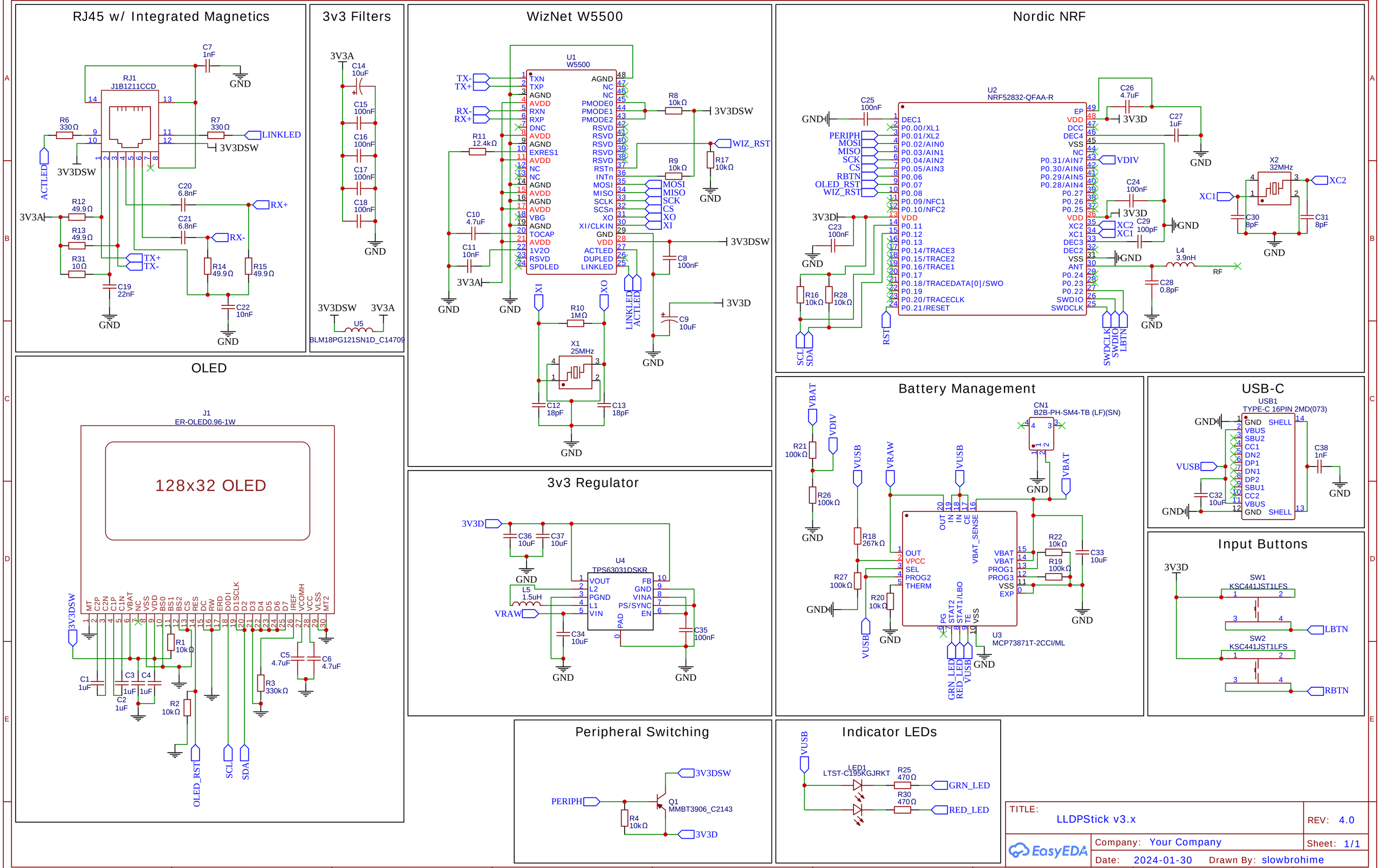
RJ45 w/ Integrated Magnetics
RJ1
J1B1211CCD
C7
1nF
GND
R6
330Ω
R7
330Ω
LINKLED
3V3DSW
ACTLED
C20
6.8nF
RX+
R12
49.9Ω
3V3A
C21
6.8nF
RX-
R13
49.9Ω
TX+
TX-
R31
10Ω
R14
49.9Ω
R15
49.9Ω
C19
22nF
C22
10nF
3v3 Filters
C14
10uF
C15
100nF
C16
100nF
C17
100nF
C18
100nF
3V3DSW
3V3A
U5
BLM18PG121SN1D_C14709
WizNet W5500
U1
W5500
TX-
TX+
RX-
RX+
R11
12.4kΩ
C10
4.7uF
C11
10nF
R8
10kΩ
R9
10kΩ
WIZ_RST
R17
10kΩ
MOSI
MISO
SCK
CS
XO
XI
C8
100nF
C9
10uF
R10
1MΩ
X1
25MHz
C12
18pF
C13
18pF
LINKLED
ACTLED
Nordic NRF
U2
NRF52832-QFAA-R
C25
100nF
PERIPH
MOSI
MISO
SCK
CS
RBTN
OLED_RST
WIZ_RST
C23
100nF
R16
10kΩ
R28
10kΩ
SCL
SDA
RST
C26
4.7uF
C27
1uF
VDIV
C24
100nF
C29
100pF
X2
32MHz
XC1
XC2
C30
8pF
C31
8pF
L4
3.9nH
RF
C28
0.8pF
SWDCLK
SWDIO
LBTN
OLED
J1
ER-OLED0.96-1W
128x32 OLED
3V3DSW
R1
10kΩ
C1
1uF
C3
1uF
C4
1uF
C2
1uF
R2
10kΩ
C5
4.7uF
C6
4.7uF
R3
330kΩ
OLED_RST
SCL
SDA
3v3 Regulator
3V3D
C36
10uF
C37
10uF
U4
TPS63031DSKR
L5
1.5uH
VRAW
C34
10uF
C35
100nF
Battery Management
VBAT
VDIV
R21
100kΩ
R26
100kΩ
VUSB
VRAW
CN1
B2B-PH-SM4-TB (LF)(SN)
R18
267kΩ
R27
100kΩ
R20
10kΩ
R22
10kΩ
R19
100kΩ
C33
10uF
U3
MCP73871T-2CCI/ML
GRN_LED
RED_LED
USB-C
USB1
TYPE-C 16PIN 2MD(073)
C38
1nF
C32
10uF
Input Buttons
SW1
KSC441JST1LFS
SW2
KSC441JST1LFS
LBTN
RBTN
Peripheral Switching
PERIPH
R4
10kΩ
Q1
MMBT3906_C2143
Indicator LEDs
LED1
LTST-C195KGJRKT
R25
470Ω
R30
470Ω
GRN_LED
RED_LED
TITLE:
LLDPStick v3.x
REV: 4.0
Company: Your Company
Sheet: 1/1
Date: 2024-01-30
Drawn By: slowbrohime
EasyEDA