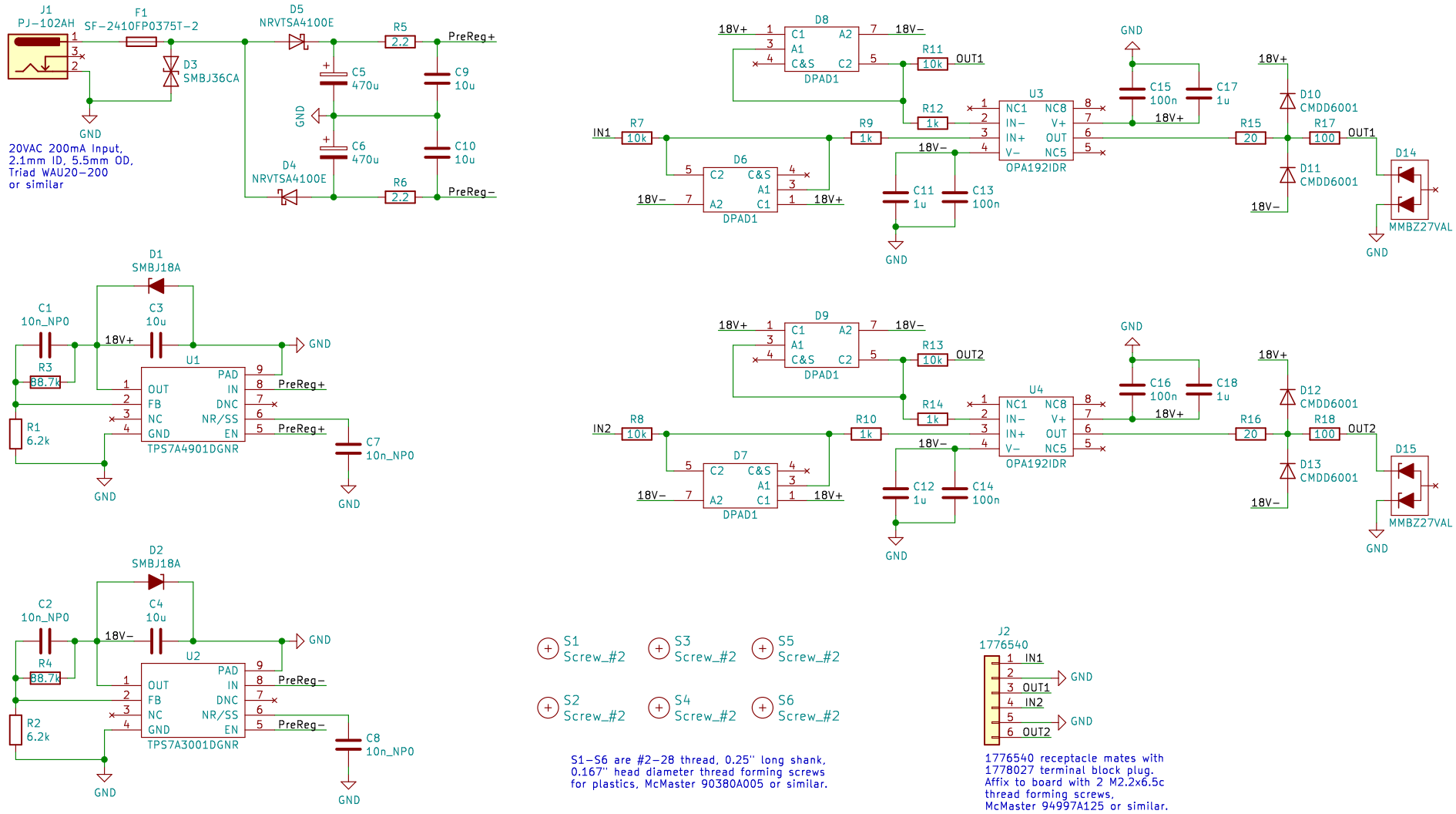

Rev3: Fixing footprint for linear regulator chips. Updating F1 fuse for higher A^2s rating.
Rev2: Mechanical update to board only.
Rev1: Floating all DPAD1 C&S pins as required by datasheet.

Sheet: /
File: HighImpedanceBuffer.sch

Title: High Impedance Buffer

Size: USLetter	Date: 2019-09-14	Rev: 3
KiCad E.D.A. kicad (5.1.2)-1		Id: 1/1