Horizontal section

Elevation

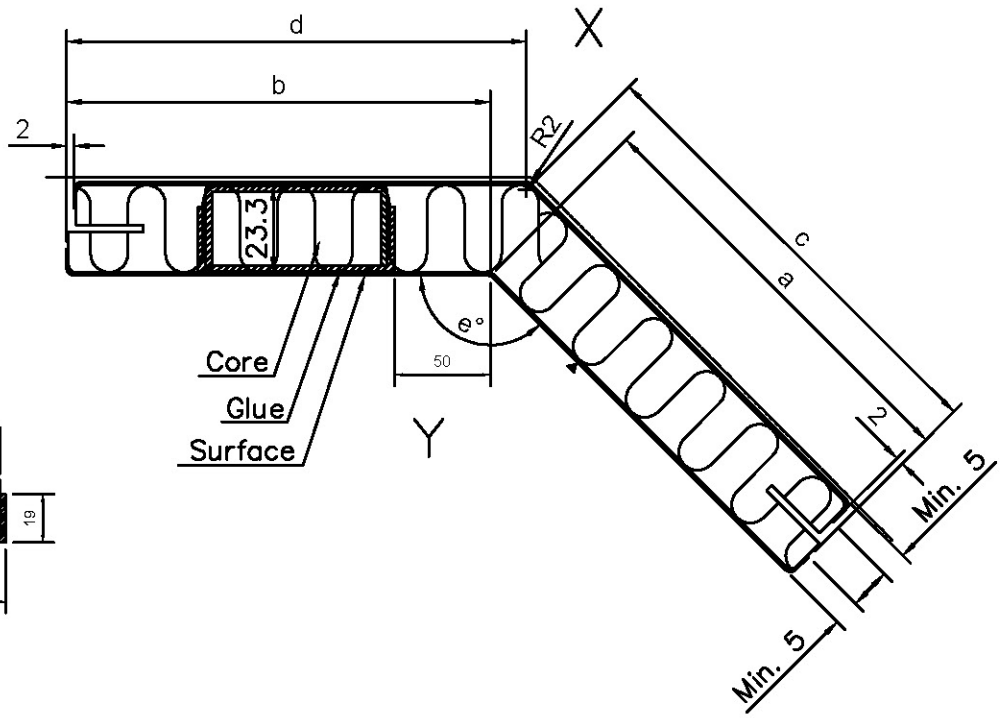

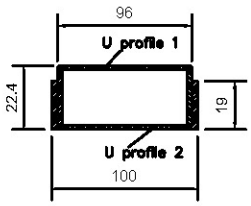

U profile 1 厚度：2.0mm镀锌

U profile 2 厚度：2.0mm镀锌

Section A

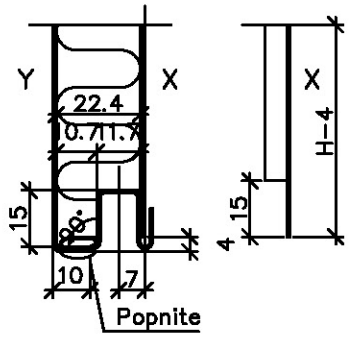

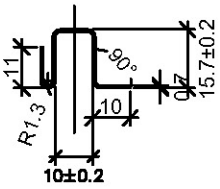

Profile

Length	pcs:
Panel bredde – 70mm	2

WI	Drawing no.	a	b	c	d	e
	A.2SG.765	90	251	101	260	135

Rev.	Description of Revision	Drawn/Date	Checked/Date	Approved/Date
0	First	Messi / 2019-04-03	Raphael / 2019-04-03	Snailc / 2019-04-03

Color surface: ▼

Tolerances: Not stated

Measurements:Not stated

				By	Date
Width:Galv. plate=+0.0mm -0.8mm	Length:+0.0mm -2.0mm	Length:acc.to spec. Max. 4000mm	Drawn:	Raphael	2019-04-03
Dec. plate=+0.0mm -0.3mm	Radius:±0.3mm	Radius:2mm	Check:	Messi	2019-04-03
	Angles:±1.0°	Angles:90°	Approve:	Snailc	2019-04-03

Inexa Interiors (Nantong) Co., Ltd.
Tel: 0513-85175069
Address: No.66 Jing-Xing d.Nantong Economic &Technical Area China

Type:
TNF Panel System 2S Standard
Panel Type G

Drawing no:
N.2SG

Scale: 1:1

Rev.: 0

This drawing is our property and must not be copied by any process, must not be shown to third party and nor it must be used for production documentation for any other accont, without our permission in writing.