Horizontal section

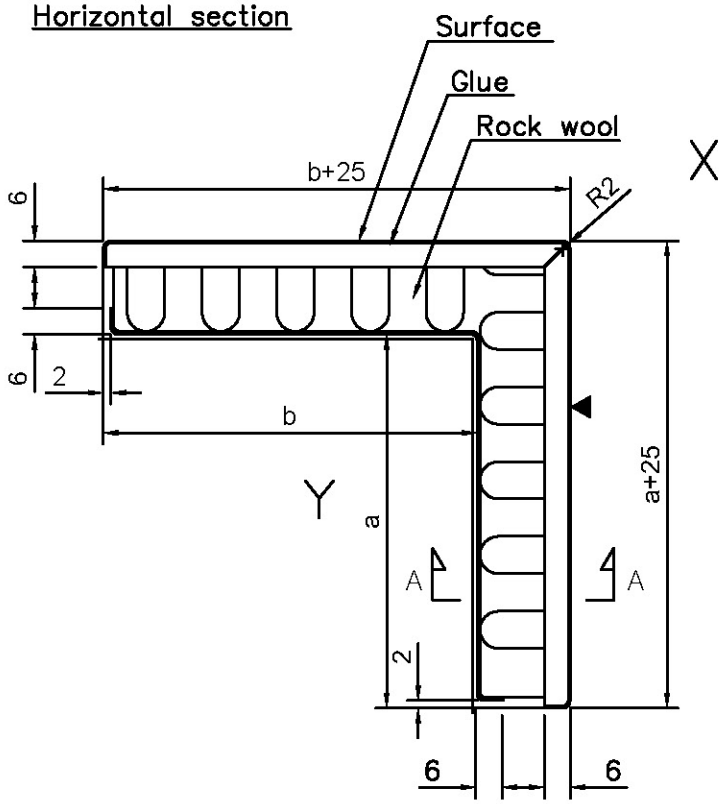

A—A:

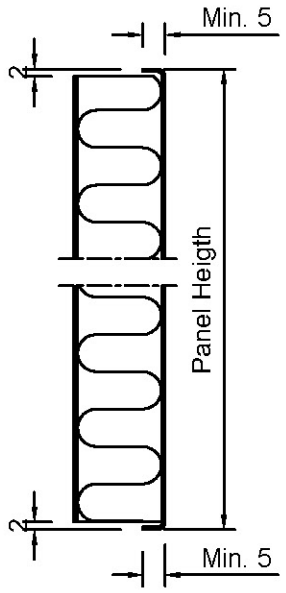

面板展开示意图:

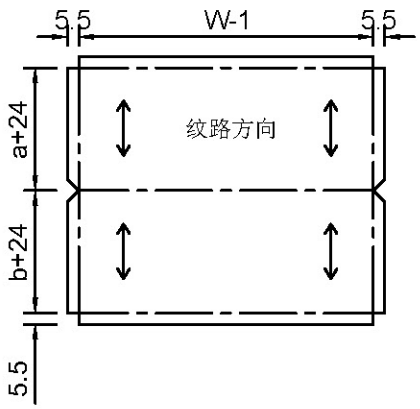

Code	Drawing no.	a	b
IG	A.2SG.857	180	470
IH	A.2SG.858	165	195
II	A.2SG.859	165	460
IJ	A.2SG.860	195	160
IK	A.2SG.861	200	153
IL	A.2SG.862	380	465
IM	A.2SG.863	365	190
IN	A.2SG.864	375	465
IO	A.2SG.865	180	70
IP	A.2SG.866	500	130
IQ	A.2SG.867	500	85
IR	A.2SG.868	510	140
IS	A.2SG.869	195	55
IT	A.2SG.870	490	80
PI	A.2SG.747	390	325
PO	A.2SG.748	237	375
QI	A.2SG.749	182	325
QO	A.2SG.750	372	475
RI	A.2SG.751	232	475
RO	A.2SG.752	190	475
SI	A.2SG.753	175	475
SO	A.2SG.754	307	475
XO	A.2SG.755	375	375
YI	A.2SG.756	317	375
YO	A.2SG.757	375	375
TI	A.2SG.758	322	375
TO	A.2SG.759	110	465
UI	A.2SG.760	207	275
UO	A.2SG.761	400	95
ZI	A.2SG.762	280	475
VI	A.2SG.763	105	475

Rev.	Description of Revision	Drawn/Date	Checked/Date	Approved/Date
0	First	Messi / 2019-03-05	Raphael / 2019-03-05	Snailc / 2019-03-05

Color surface: ▼

Tolerances: Not stated Measurements:Not stated

				By	Date
Width:Galv. plate=+0.0mm -0.8mm	Length:+0.0mm -2.0mm	Length:acc.to spec. Max. 4000mm	Drawn:	Raphael	2019-03-05
Dec. plate=+0.0mm -0.3mm	Radius:±0.3mm	Radius:2mm	Check:	Messi	2019-03-05
	Angles:±1.0°	Angles:90°	Approve:	Snailc	2019-03-05

TNF Inexa
Inexa Interiors (Nantong) Co., Ltd.
Tel: 0513-85175069
Address: No.66 Jing-Xing d.Nantong Economic &Technical Area China

Type:
TNF Panel System 2S Standard Panel Type G

Drawing no:
N.2SG

Scale: 1:1
Rev.: 0

This drawing is our property and must not be copied by any process, must not be shown to third party and nor it must be used for production documentation for any other accont, without our permission in writing.