Regulador lineal

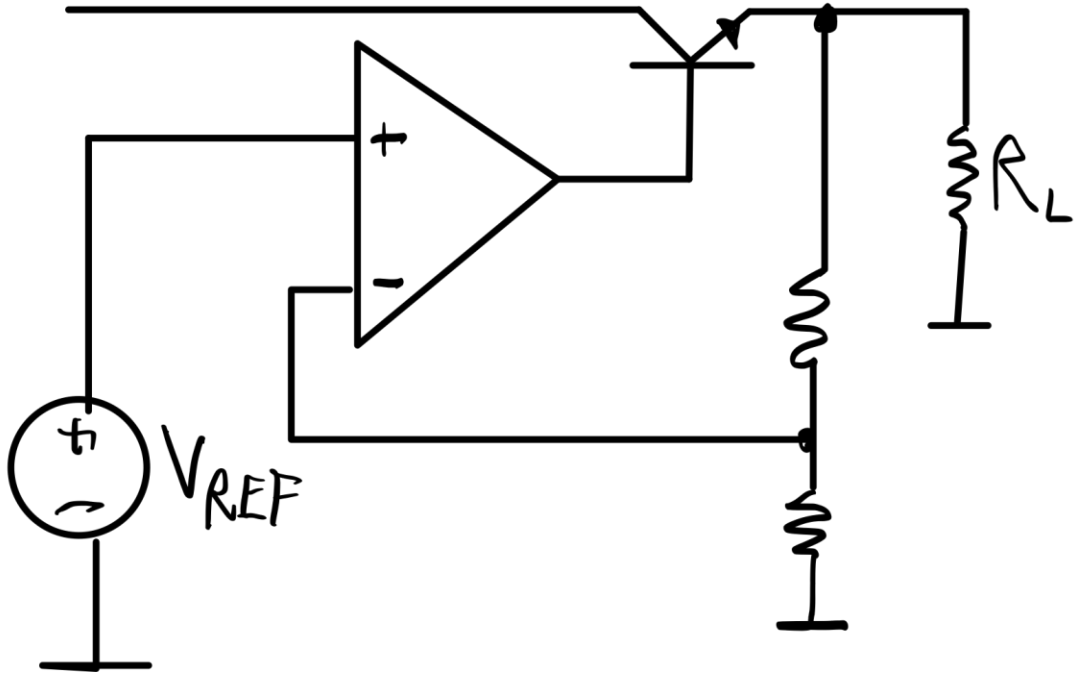

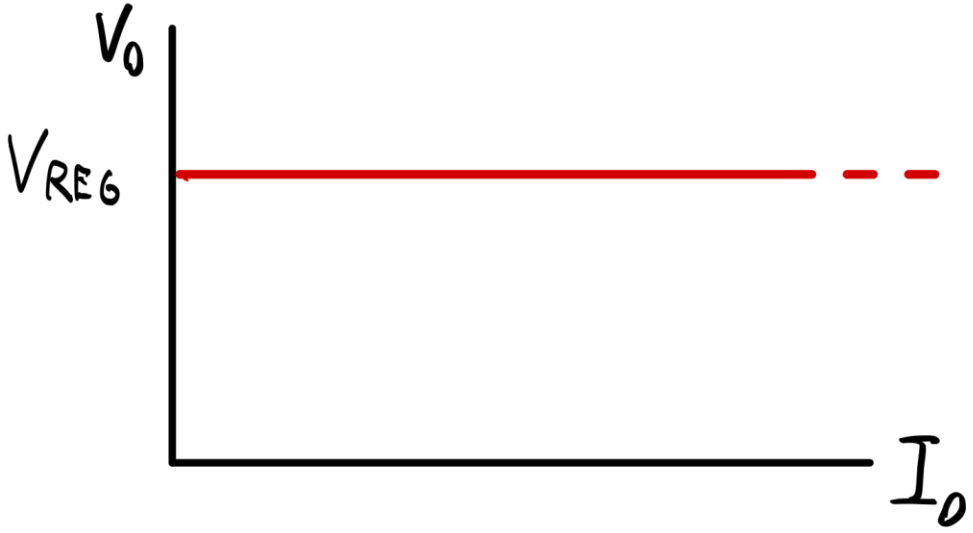

Limitador de corriente

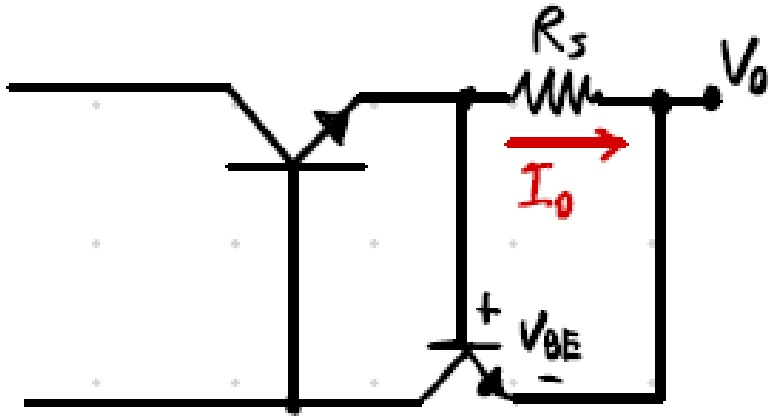

$$I_{MAX} = \frac{V_{BE\,ON}}{R_S}$$

Foldback

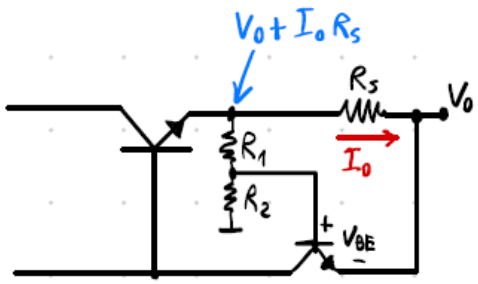

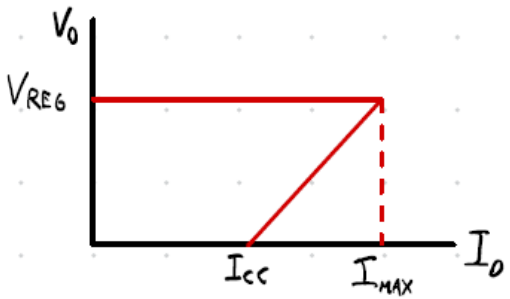

$$V_{BE} = V_{RS} - V_{R1}$$

$$V_{BE} = R_S I_0 - (V_0 + R_S I_0) \frac{R_1}{R_1 + R_2}$$

$$I_0 = \frac{(R_1 + R_2) V_{BE} + R_1 V_0}{R_S R_2}$$

$$\boxed{I_0 = \underbrace{\frac{V_{BE}}{R_S}\left(1 + \frac{R_1}{R_2}\right)}_{I_{CC}} + \frac{V_0}{R_S}\frac{R_1}{R_2}}$$

Calculos

$$I_{MAX} = \frac{V_{BEON}}{R_S}\left(1+\frac{R_1}{R_2}\right) + \frac{V_0}{R_S}\frac{R_1}{R_2}$$

$$I_{CC} = \frac{V_{BEON}}{R_S}\left(1+\frac{R_1}{R_2}\right)$$

$$\frac{I_{MAX}}{I_{CC}} = 1 + \frac{V_0}{V_{BEON}} \frac{\frac{R_1}{R_2}}{1+\frac{R_1}{R_2}}$$

$$\frac{I_{MAX}}{I_{CC}} = 1 + \frac{V_0}{V_{BEON}} \frac{1}{1+\frac{R_2}{R_1}}$$

$$\left(\frac{I_{MAX}}{I_{CC}} - 1\right)\frac{V_{BEON}}{V_0} = \frac{1}{1+\frac{R_2}{R_1}}$$

$$\boxed{\frac{R_2}{R_1} = \frac{V_0}{\left(\frac{I_{MAX}}{I_{CC}} - 1\right) V_{BEON}} - 1} \Rightarrow \boxed{R_S = \frac{V_{BEON}}{I_{CC}}\left(1+\frac{R_1}{R_2}\right)}$$

Sensor de corriente

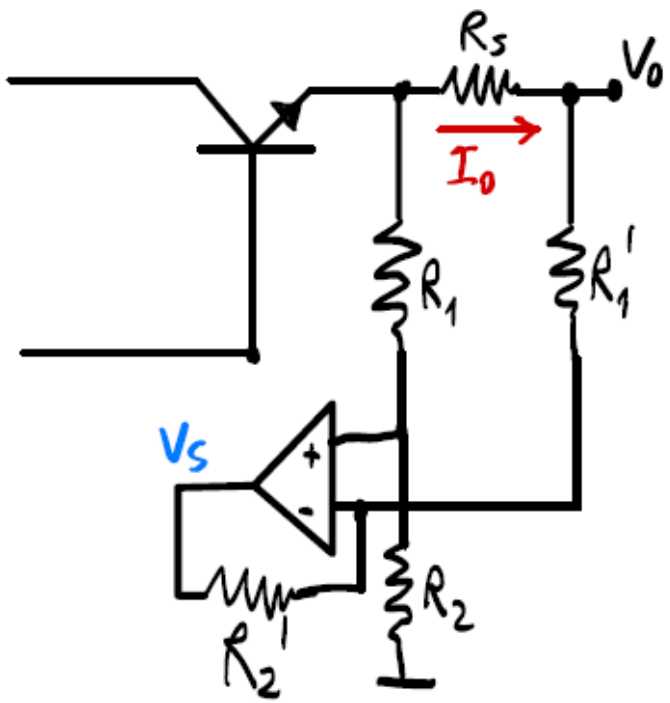

$$A_{VC} = 0 \quad (R_1 = R_1', R_2 = R_2')$$

$$A_{VD} = \frac{R_2}{R_1}$$

$$\boxed{V_s = I_0 . R_s . \frac{R_2}{R_1}}$$

Limitador de corriente

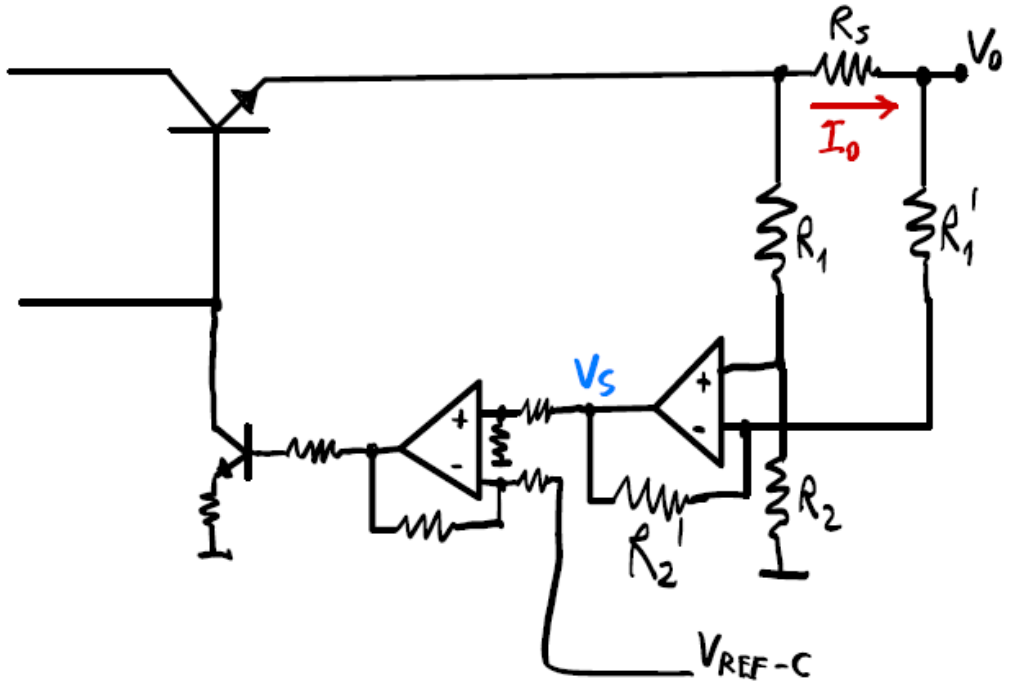

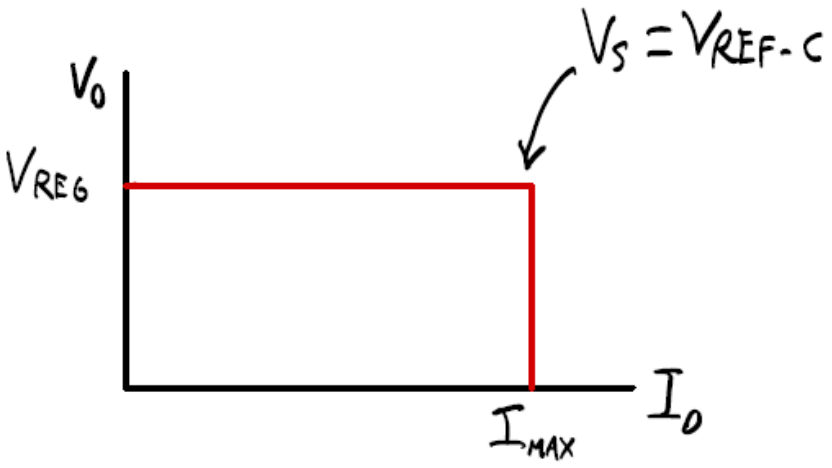

$$V_{REF-C} \simeq I_{MAX} R_s \frac{R_2}{R_1}$$

Foldback

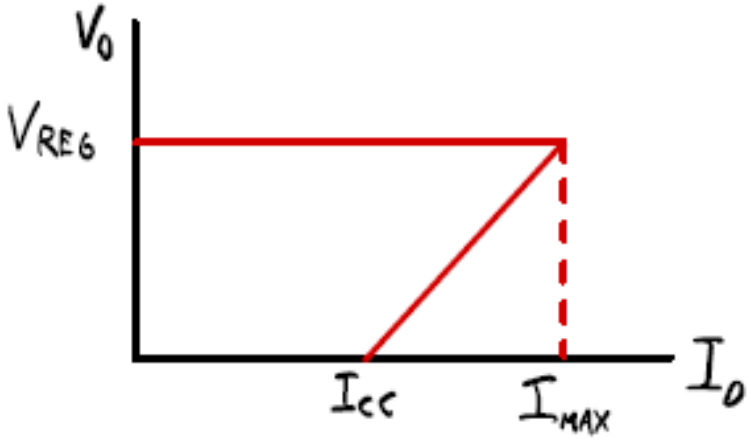

$$V_{REF-C} = \left(I_{cc} + V_0 \cdot \frac{\Delta I}{\Delta V}\right)$$

$\Delta V = V_{REG}$

$\Delta I = I_{MAX} - I_{cc}$

$$V_{REF-C} = \underbrace{I_{cc} R_s \frac{R_2}{R_1}}_{\text{FIJO}} + \underbrace{V_0 \cdot \frac{\Delta I}{\Delta V} \cdot R_s \frac{R_2}{R_1}}_{\text{VARIABLE}}$$

$$V_{REF-C} = \alpha V_{REF} + \beta V_0$$

Ejemplo

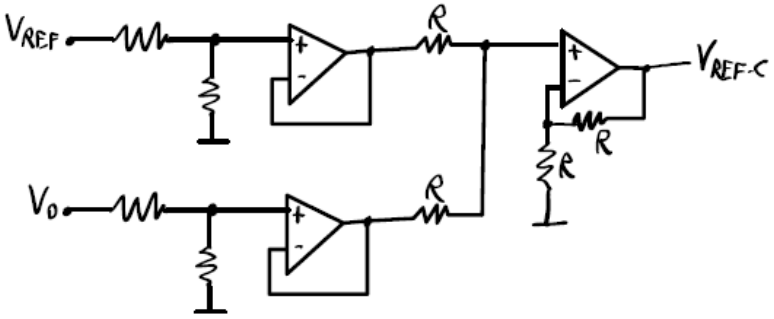

$V_{REG} = 5V$

$V_{REF} = 2V$

$I_{CC} = 0.5A$

$I_{MAX} = 1A$

$R_S = 0.1\Omega$

$\frac{R_2}{R_1} = 10$

$$\alpha \cdot V_{REF} = I_{CC} R_S \frac{R_2}{R_1} \Rightarrow \alpha = \frac{I_{CC} R_S R_2}{V_{REF} \cdot R_1} = 1/4$$

$$\beta = \frac{\Delta I}{\Delta V} \cdot R_S \frac{R_2}{R_1} = 0.1$$

Implementacion

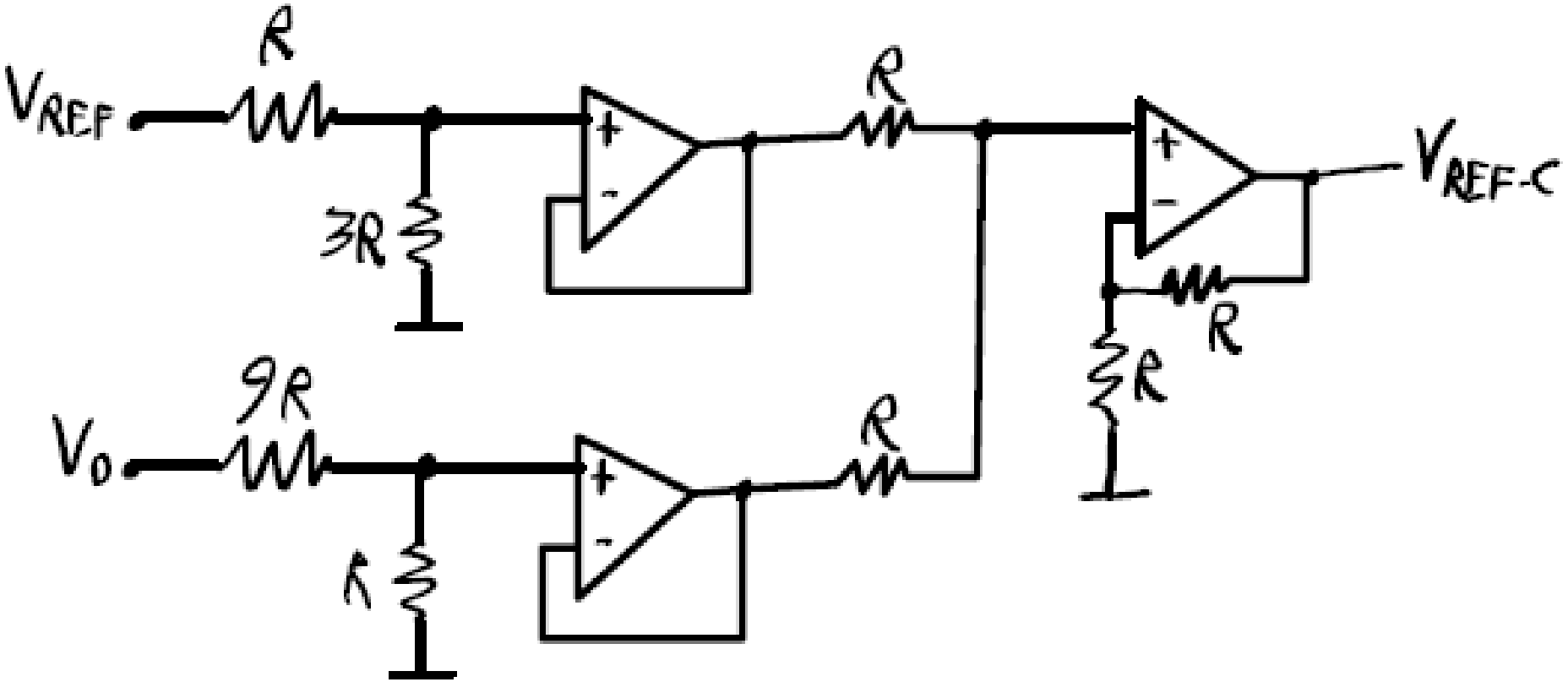

Consideraciones

- Se puede implementar con menos operacionales?
- Cuando esta activo el lazo de tension y cuando esta activo el lazo de Corriente?
- Como cambia la implementacion si uso un MOS?