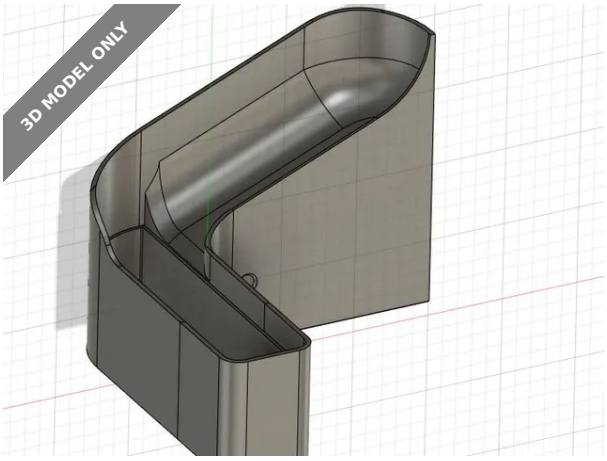

Bambu Lab X1-Carbon / P1P / P2S Poop Shoot removable bucket

D K2ij3

VIEW IN BROWSER

updated 2. 2. 2026 | published 2. 2. 2026

Summary

Inspired by existing models, but with removable waste garbage can and hold by magnets

3D Printers > Bambu Lab Parts & Upgrades

Print in PLA

No supports needed

Just glue Face and Tray together

Hold at the printer by 10x2 magnets

Detect thin walls should be enabled if printed with a linewidth greater than 0.4mm

Model files

tray_v2.stl

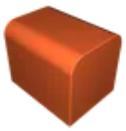

face_v2.stl

slide_v2.stl

License

This work is licensed under a
Creative Commons (4.0 International License)

Attribution-NonCommercial

✖ | Sharing without ATTRIBUTION
✔ | Remix Culture allowed
✖ | Commercial Use
✖ | Free Cultural Works
✖ | Meets Open Definition