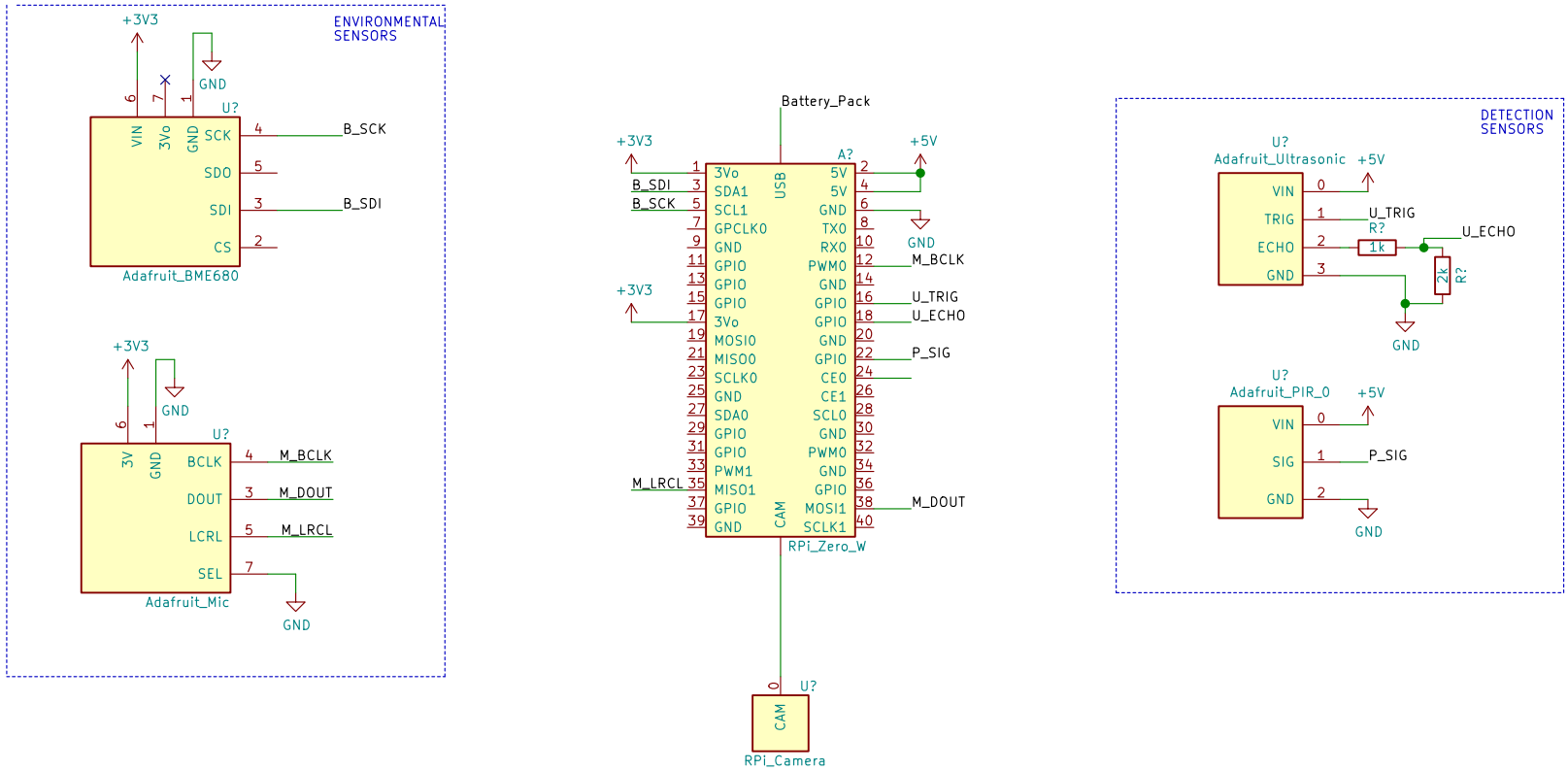

Senior Design

Sheet: /

File: sbh.sch

Title: Smart Birdhouse

Size: A4	Date: 2019-11-20	**Rev: 1.0**
KiCad E.D.A. kicad 5.0.2-bee76a070ubuntu18.04.1		Id: 1/1