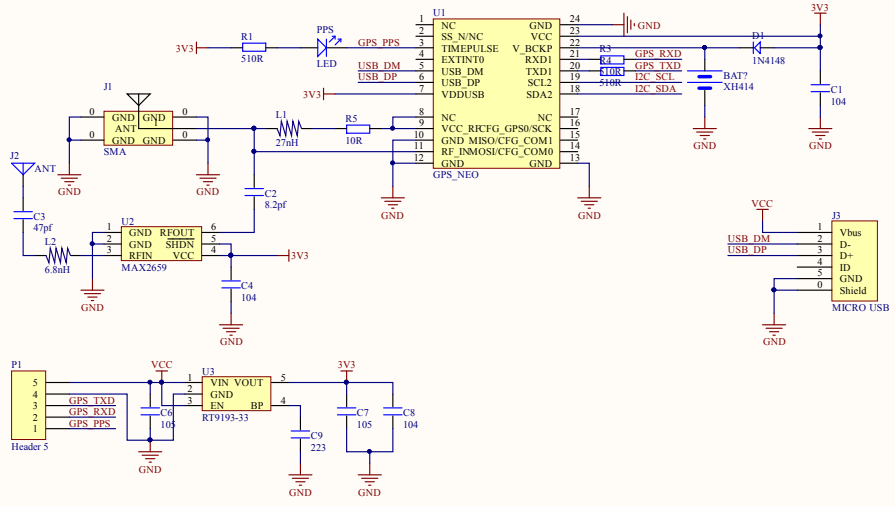

Title		
Size A4	Number	Revision
Date: 2018-01-09		Sheet of
File: D:\3.DXP My Workspace\...\GPS模块原理图.SchDoc		Drawn By: