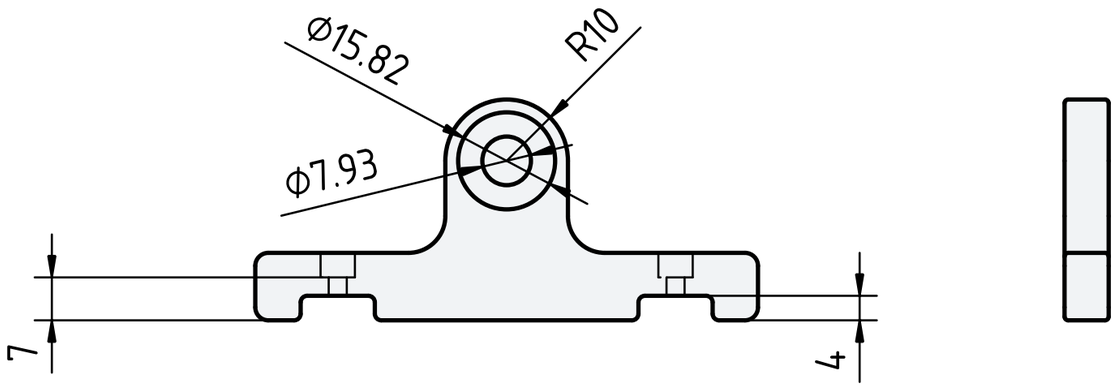

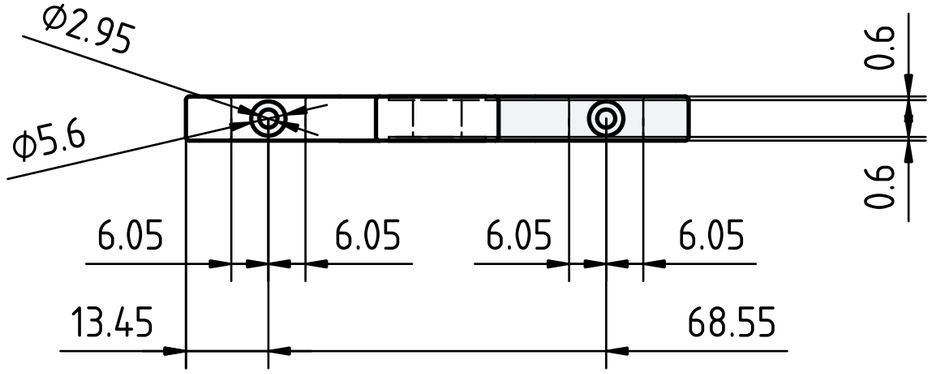

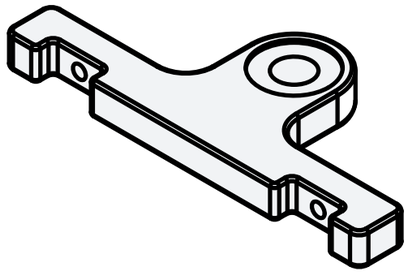

Matte Black Anodizing

All units in mm

Critical dimensions shown

HS code 761699 Al bracket

Part Material: Aluminium 6061	General tolerances: +/- 0.05 mm		Scale: 1 : 1	
Title, supplementary title: Microphone bracket V3 Neat Working Bee	Created by: smasha314		Owner:	
	Approved by: B. Hecate			
Document type: Component Drawing	Drawing number: DN		Responsible department: RD	
Document status: Production	Language: EN	Issue date: 5 Apr 2026	Revision: AAA	Sheet: 1 / 1

A3