Bill of Material				
ITEM	PART NUMBER	QTY	DESCRIPTION	Rev
1	DDC-SB-XXXX-XXXX	1	XX U X XX D DDC BOTTOM ENCLOSURE, TYPE 3R	A
2	DDC-ST-XXXX-XXXX	1	XXW, SERIES BLOWER TOP CABINET CONFIG	A

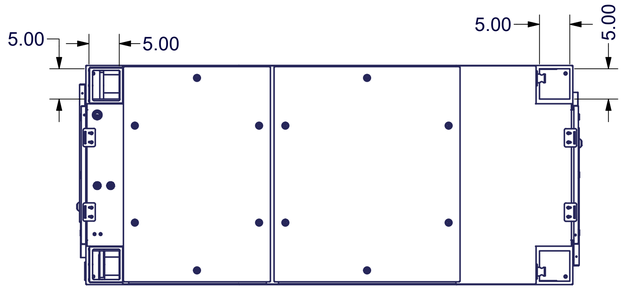

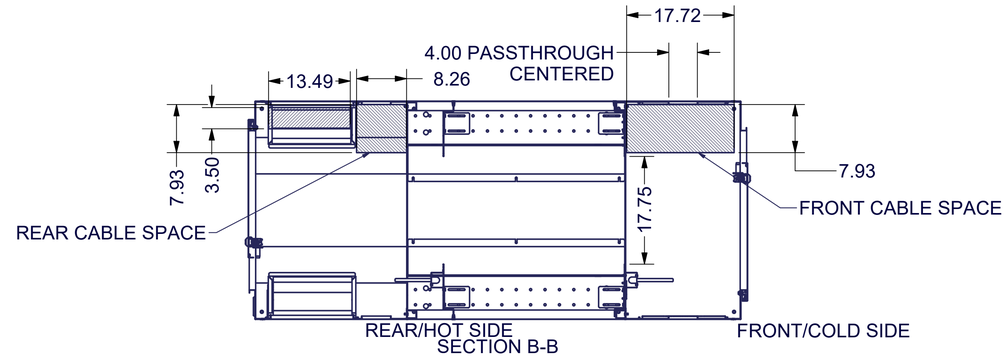

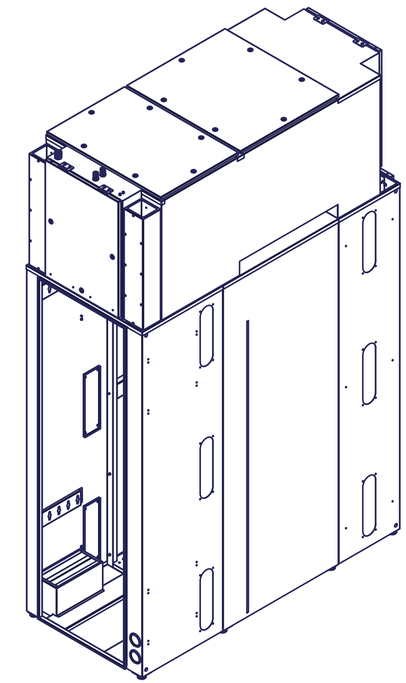

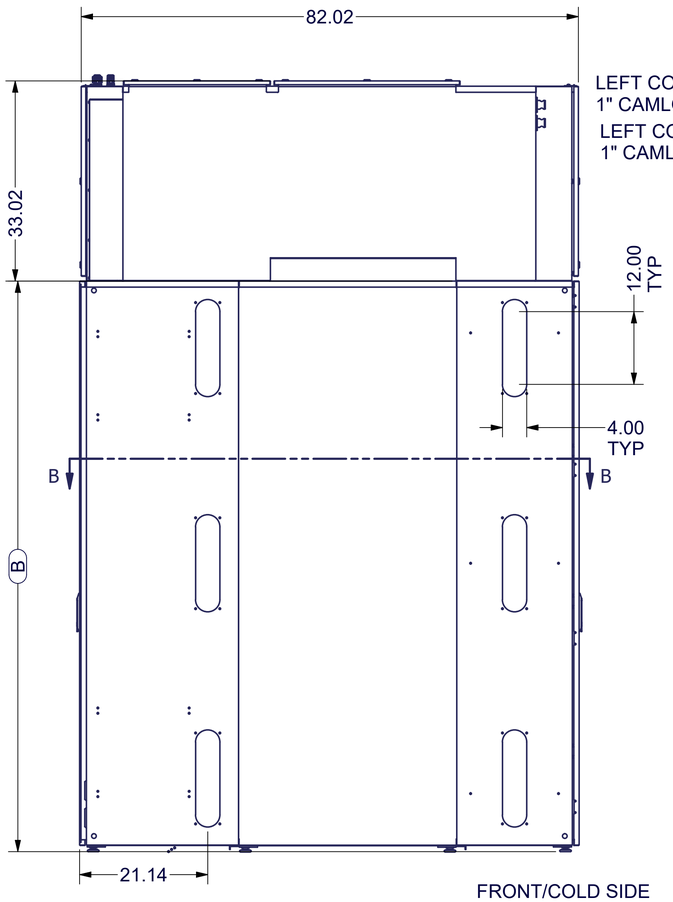

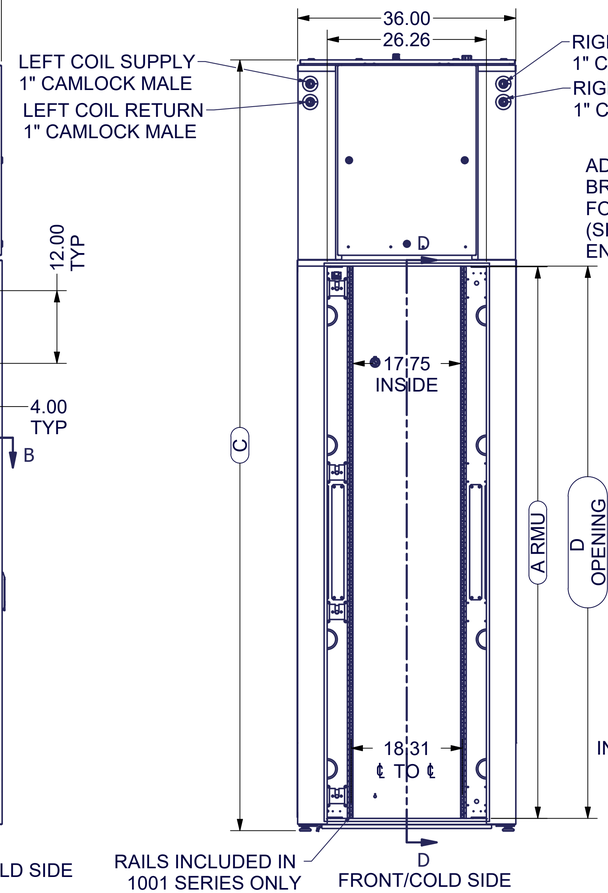

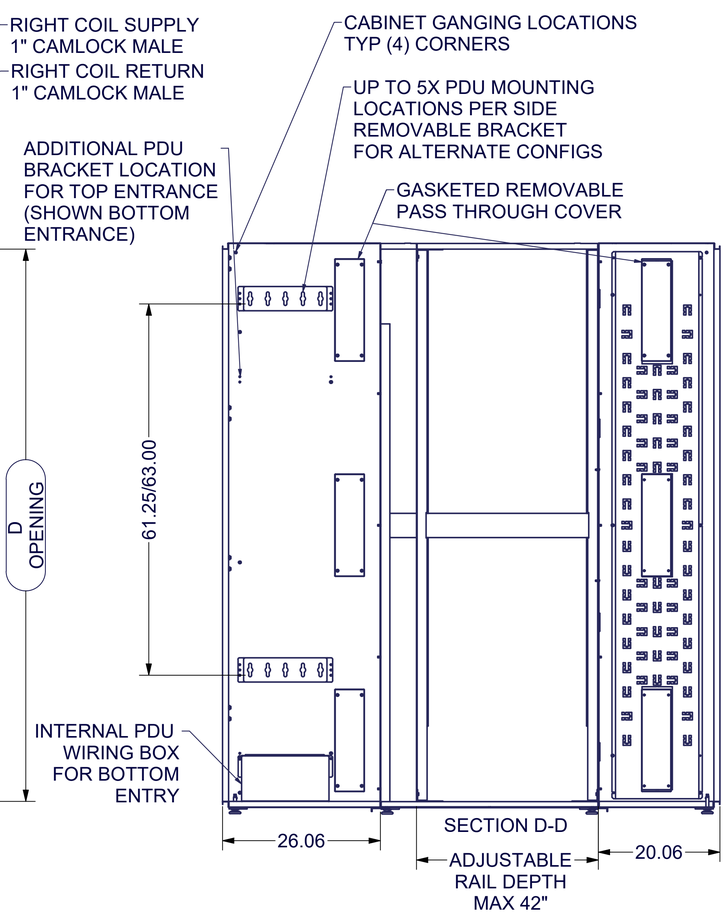

REAR/HOT SIDE

Table				
PART NUMBER	A	B	C	D
DDC-52-4536-1001/DDC-52-4536-2001	45	81.87	114.90	78.84
DDC-52-4836-1001/DDC-52-4836-2001	48	87.12	120.15	84.09
DDC-52-5236-1001/DDC-52-5236-2001	52	94.12	127.15	91.09

BOM			
FULL CAB SKU	TOP CAB SKU	BOTTOM CAB SKU	DESCRIPTION
DDC-52-5236-1201	DDC-ST-3603-1200	DDC-SB-5236-1000	52KW, 52U, 36W WITH MOUNTING RAILS - 208V
DDC-52-5236-2201	DDC-ST-3603-1200	DDC-SB-5236-2000	52KW, 52U, 36W W/O MOUNTING RAILS - 208V
DDC-52-5236-1401	DDC-ST-3603-1400	DDC-SB-5236-1000	52KW, 52U, 36W WITH MOUNTING RAILS - 415V
DDC-52-5236-2401	DDC-ST-3603-1400	DDC-SB-5236-2000	52KW, 52U, 36W W/O MOUNTING RAILS - 415V
DDC-85-5236-1201	DDC-ST-3610-1200	DDC-SB-5236-1000	85KW, 52U, 36W WITH MOUNTING RAILS - 208V
DDC-85-5236-2201	DDC-ST-3610-1200	DDC-SB-5236-2000	8KW, 52U, 36W W/O MOUNTING RAILS - 208V
DDC-85-5236-1401	DDC-ST-3610-1400	DDC-SB-5236-1000	85KW, 52U, 36W WITH MOUNTING RAILS - 415V
DDC-85-5236-2401	DDC-ST-3610-1400	DDC-SB-5236-2000	85KW, 52U, 36W W/O MOUNTING RAILS - 415V

UNLESS OTHERWISE SPECIFIED: DIMENSIONS ARE IN INCHES

TOLERANCES

DECIMALS: .X ±.1 .XX ±.03 .XXX ±.010

ANGLES: FRACT ±1/16 DEC ±.127 ANG ±1°

NEXT ASSEMBLY

USED ON

DIMENSIONS, LIMITS APPLY AFTER APPLICATION OF FINISH

INTERPRET DIMENSIONS PER ASME Y14.5M-1994

MATERIAL

FINISH

PART NUMBER

DRAWN ANGLE PROJECTION

DATE

DDC CABINET TECHNOLOGY

TITLE:

XXU X 36W X 82D S SERIES ENCLOSURE

DWG NO. DDC-XX-XXXX-XXXX_MASTER

REV N/A

SCALE: NTS

SHEET SIZE: A3

SHEET 1

THIS DRAWING IS THE PROPERTY OF DDC CABINET TECHNOLOGY. ANY REPRODUCTION IN PART OR AS A WHOLE WITHOUT THE WRITTEN PERMISSION OF DDC CABINET TECHNOLOGY IS PROHIBITED.

PARTS LIST				
ITEM	PART NUM	DESCRIPTION	QTY	VENDOR
1	1-SXL	1" SXL Lead Free Bronze Wye Strainer (Threaded)	2	Athena
2	A-22PE-A11	T-piece with thermowell, DN 1"	2	Belimo
3	EV100+LRX-E	EV100-LRX-E 1" Energy vales w/ temp prob	2	Belimo
4	C10685	"Y" strainer, 60 mesh screen Type 304 stainless 1-5/32" OD x 2-11/16" long	2	Custom Filtration
5	IBRLF9G	1 in. FNPT 125# Schedule 40 Standard Global Brass 90 Degree Elbow	4	Ferguson
6	GBRNGCL	1 in. x Close MNPT Schedule 40 Standard Global Brass Nipple	4	Ferguson
7	IBRLFCPLUGG	1 in. MNPT 125# Square Head Brass Plug	1	Ferguson
8	5655K35	Low-Profile Band Clamps for Firm Hose, 201 Stainless Steel, 3/4" to 1-1/2" ID	16	McMaster-Carr
9	B100-BR	1" Type B Coupler, Brass	4	Proflow Dynamics
10	C100-BR	1" Type C Coupler, Brass	8	Proflow Dynamics
11	F100-BR	1" Type F Adapter, Brass	12	Proflow Dynamics
12	538202FD	Replacement Boiler Drain Valve, 1/4" NPT x 3/4" GHT	2	SupplyHouse
13	BRB050-025	1/2"x 1/4" MIP x FIP Brass Bushing (Lead Free)	2	SupplyHouse

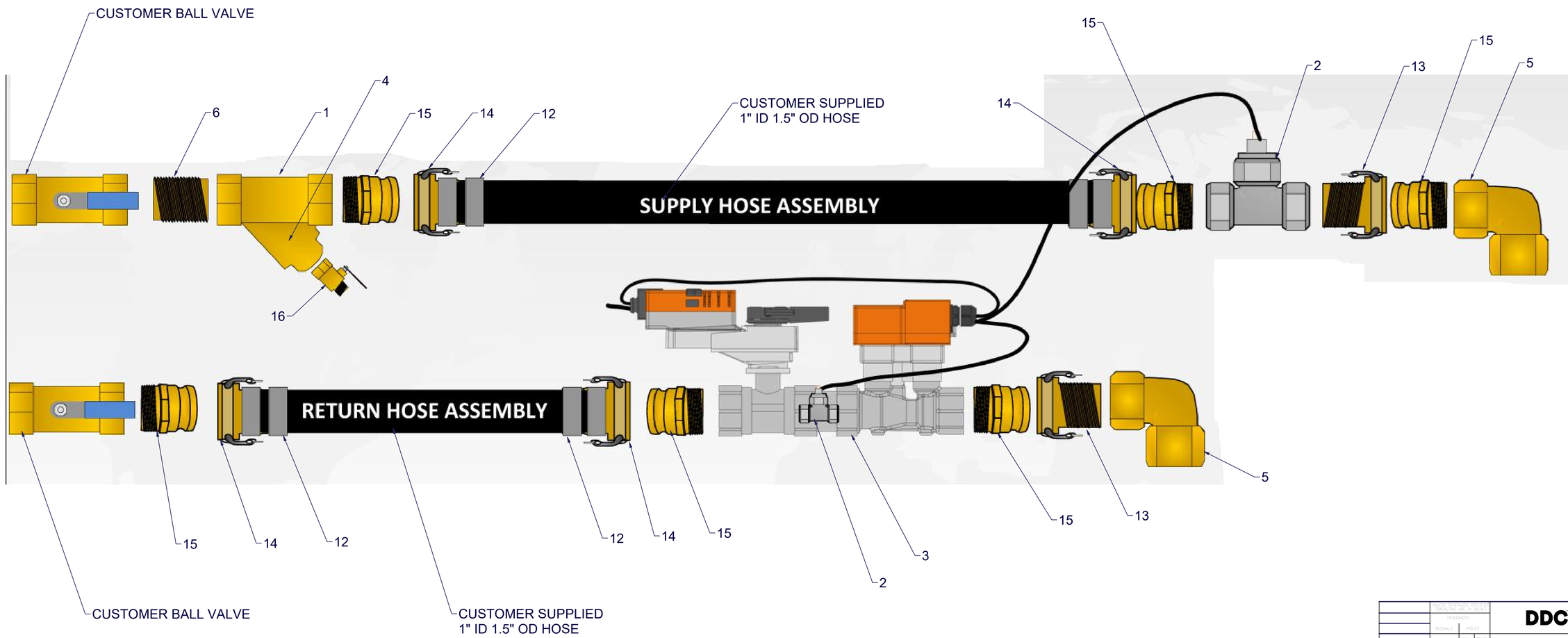

DDC CABINET TECHNOLOGY

TITLE: DDC - S1000 - PLUMBING SHIP LOOSE

DWG NO. DDC-S1000-PSL

REV. N/A

SHEET 2