US 20200008185A1

(19) United States

(12) Patent Application Publication

Chen et al.

(10) Pub. No.: US 2020/0008185 A1

(43) Pub. Date: Jan. 2, 2020

(54) **TONE PLANS AND PREAMBLES FOR EXTREMELY HIGH THROUGHPUT**

(71) Applicants: **Xiaogang Chen**, Hillsboro, OR (US); **Ilan Sutskover**, Hadera (IL); **Qinghua Li**, San Ramon, CA (US); **Robert J. Stacey**, Portland, OR (US); **Thomas J. Kenney**, Portland, OR (US); **Feng Jiang**, Santa Clara, CA (US)

(72) Inventors: **Xiaogang Chen**, Hillsboro, OR (US); **Ilan Sutskover**, Hadera (IL); **Qinghua Li**, San Ramon, CA (US); **Robert J. Stacey**, Portland, OR (US); **Thomas J. Kenney**, Portland, OR (US); **Feng Jiang**, Santa Clara, CA (US)

(21) Appl. No.: **16/566,271**

(22) Filed: **Sep. 10, 2019**

Related U.S. Application Data

(60) Provisional application No. 62/729,262, filed on Sep. 10, 2018, provisional application No. 62/739,502, filed on Oct. 1, 2018.

Publication Classification

(51) **Int. Cl.**

H04W 72/04	(2006.01)
H04L 29/06	(2006.01)
H04L 27/20	(2006.01)
H04L 5/00	(2006.01)
H04B 7/0456	(2006.01)

(52) **U.S. Cl.**

CPC ***H04W 72/048*** (2013.01); ***H04L 69/18*** (2013.01); ***H04L 27/2064*** (2013.01); ***H04L 5/0041*** (2013.01); ***H04B 7/046*** (2013.01); ***H04L 5/0023*** (2013.01); ***H04L 5/0044*** (2013.01)

(57) **ABSTRACT**

Methods, apparatuses, and computer readable media for tone plans and preambles for extremely high throughput (EHT) in a wireless network are disclosed. An apparatus of an EHT access point (AP) or EHT station (STA), where the apparatus includes processing circuitry configured to: encode a physical layer (PHY) protocol data unit (PPDU), the PPDU including a EHT preamble, the EHT preamble including a legacy preamble portion and a EHT preamble portion, the legacy preamble including a legacy short training field (L-SFT), a legacy long-training field (L-LTF), and a legacy signal field (L-SIG), the EHT preamble portion comprising an EHT short signal field (EHT S-SIG), the EHT S-SIG including a modulation and coding scheme (MCS) subfield indicating a MCS of a subsequent data portion. The PPDU may be transmitted on a distributed or contiguous resource unit (RU) allocation. The RU may be configured to not straddle two physical 20 MHz subchannels.

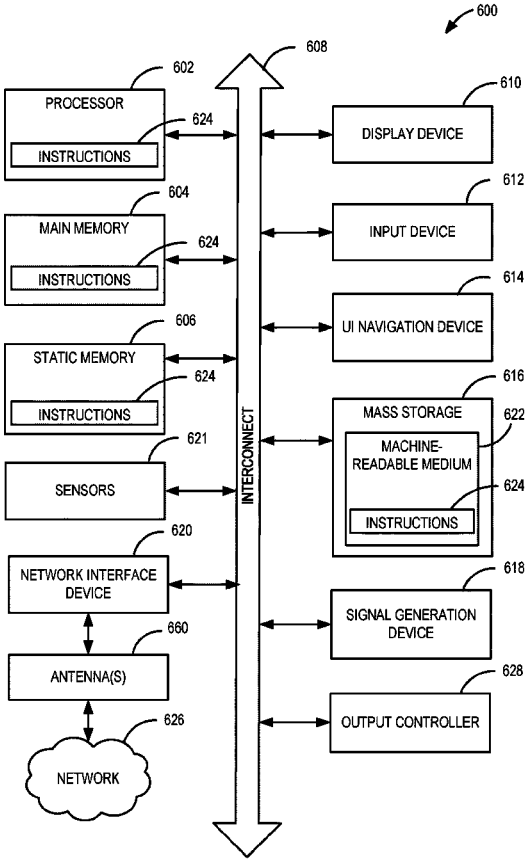

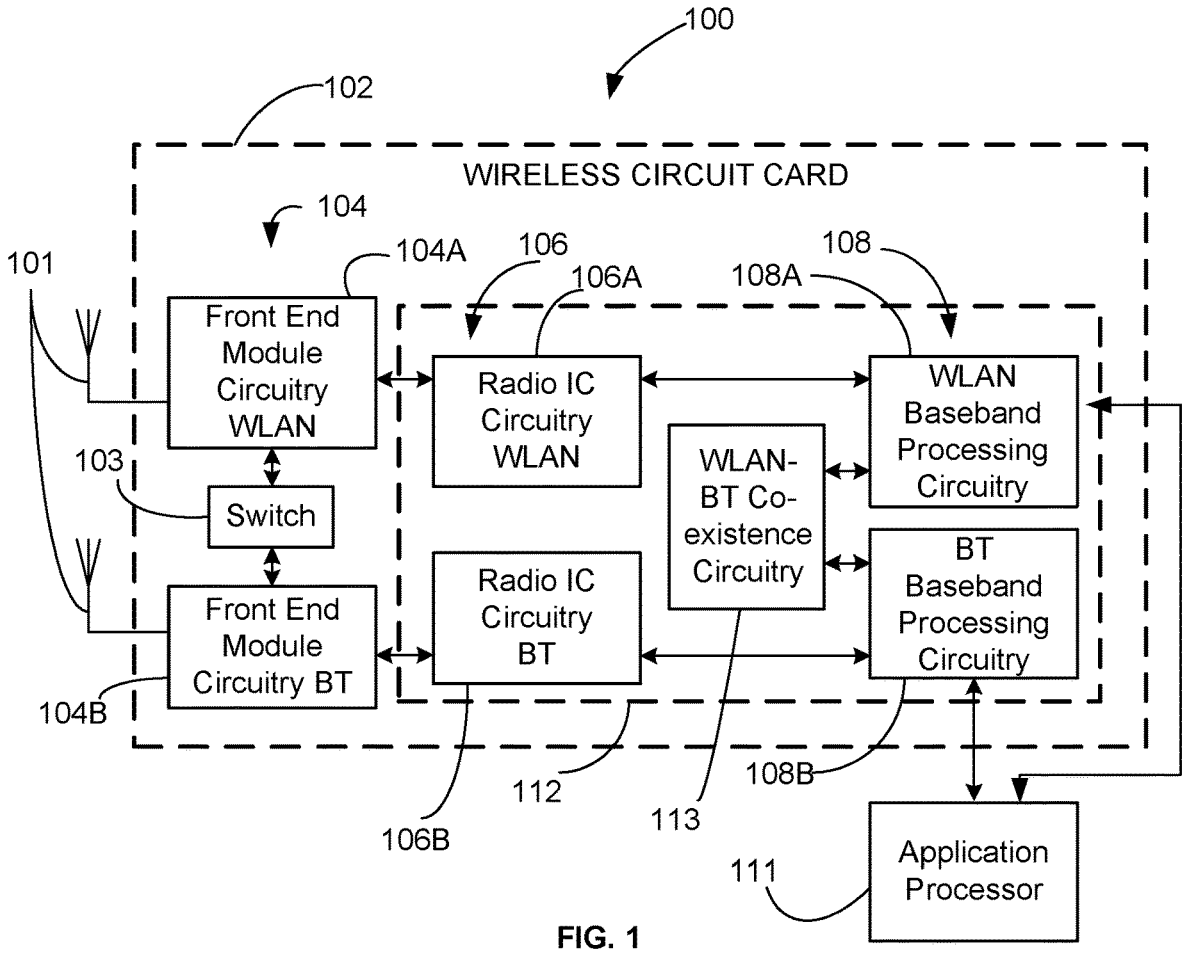
100
102
WIRELESS CIRCUIT CARD
104
101
104A
106
106A
108
108A
Front End Module Circuitry WLAN
Radio IC Circuitry WLAN
WLAN Baseband Processing Circuitry
103
Switch
WLAN-BT Co-existence Circuitry
BT Baseband Processing Circuitry
Front End Module Circuitry BT
Radio IC Circuitry BT
104B
112
113
108B
106B
111
Application Processor

FIG. 1

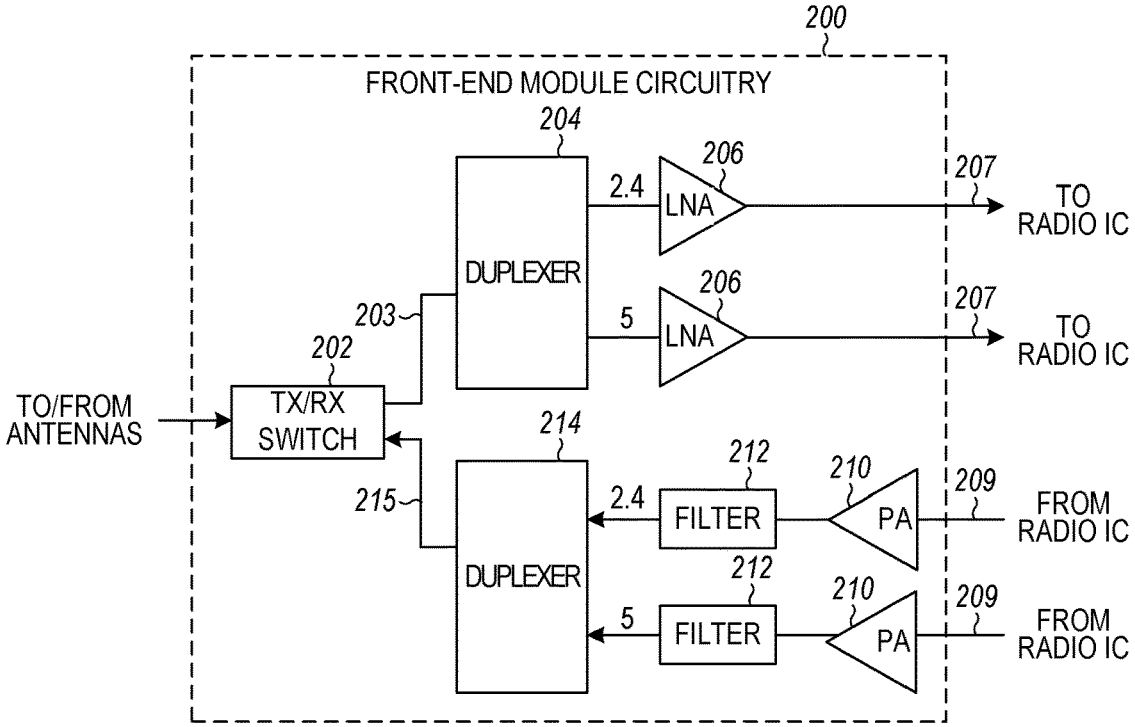
200
FRONT-END MODULE CIRCUITRY
204
206
207
2.4
LNA
TO RADIO IC
DUPLEXER
206
207
203
5
LNA
TO RADIO IC
202
TO/FROM ANTENNAS
TX/RX SWITCH
214
212
210
209
215
2.4
FILTER
PA
FROM RADIO IC
DUPLEXER
212
210
209
5
FILTER
PA
FROM RADIO IC

FIG. 2

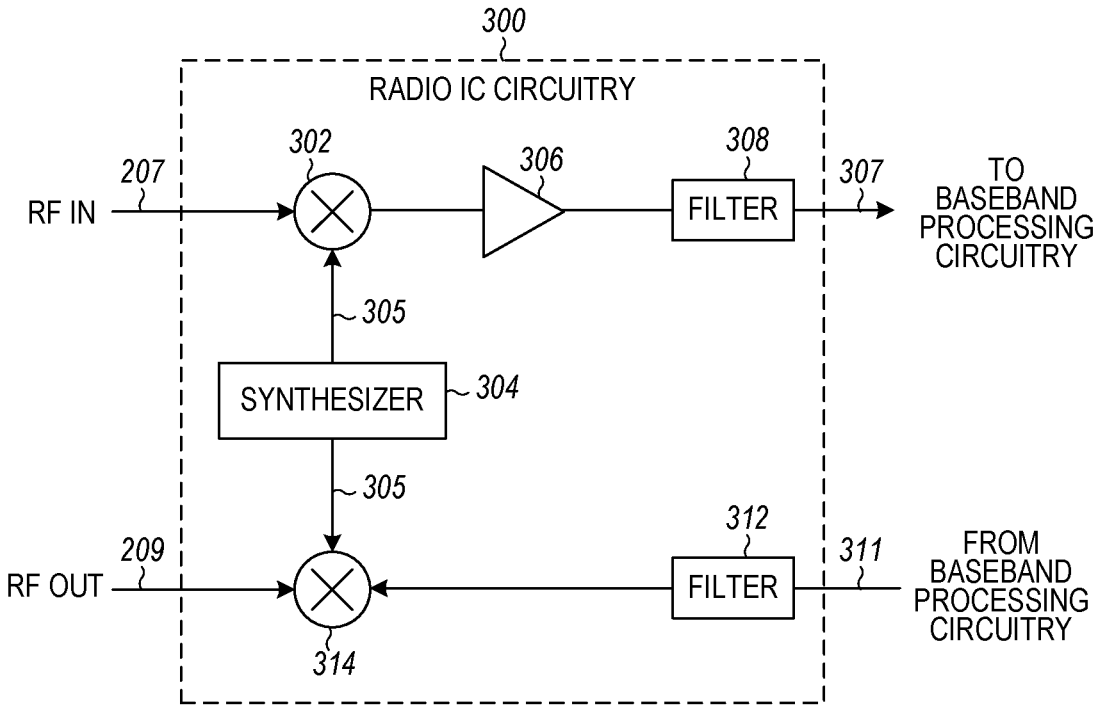
300
RADIO IC CIRCUITRY
RF IN
207
302
306
308
FILTER
307
TO BASEBAND PROCESSING CIRCUITRY
305
SYNTHESIZER
304
305
RF OUT
209
312
FILTER
311
FROM BASEBAND PROCESSING CIRCUITRY
314

FIG. 3

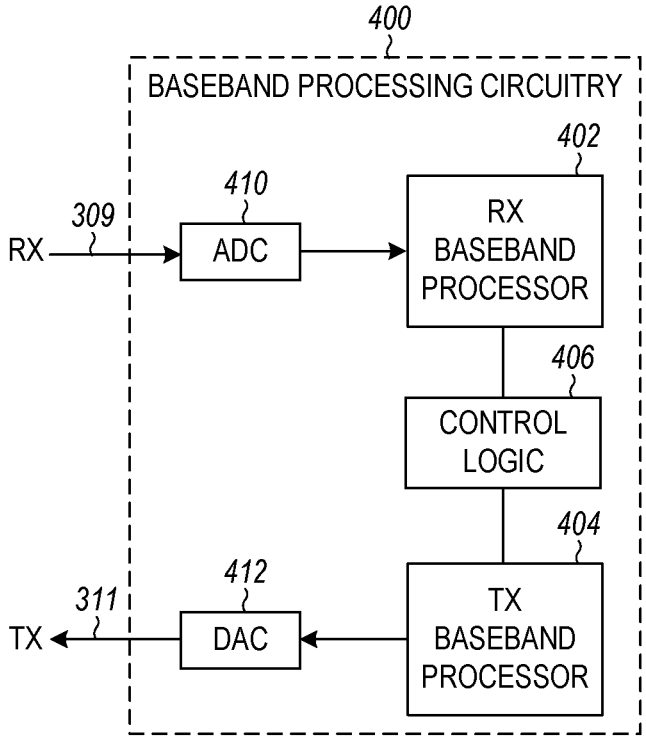
400
BASEBAND PROCESSING CIRCUITRY
402
410
RX
309
ADC
RX BASEBAND PROCESSOR
406
CONTROL LOGIC
404
412
311
TX
DAC
TX BASEBAND PROCESSOR

FIG. 4

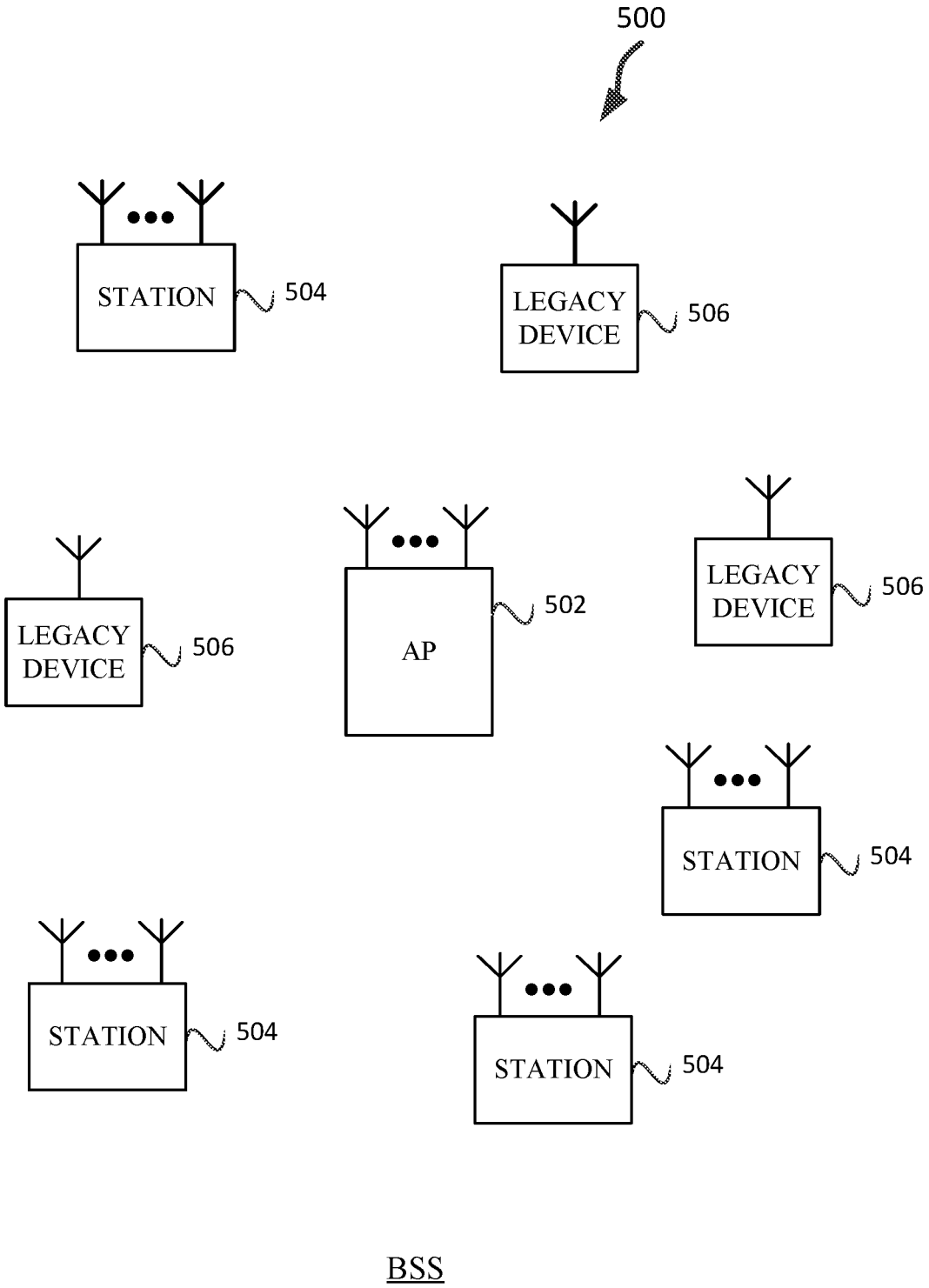
500
STATION
504
LEGACY DEVICE
506
LEGACY DEVICE
506
AP
502
LEGACY DEVICE
506
STATION
504
STATION
504
STATION
504
BSS

FIG. 5

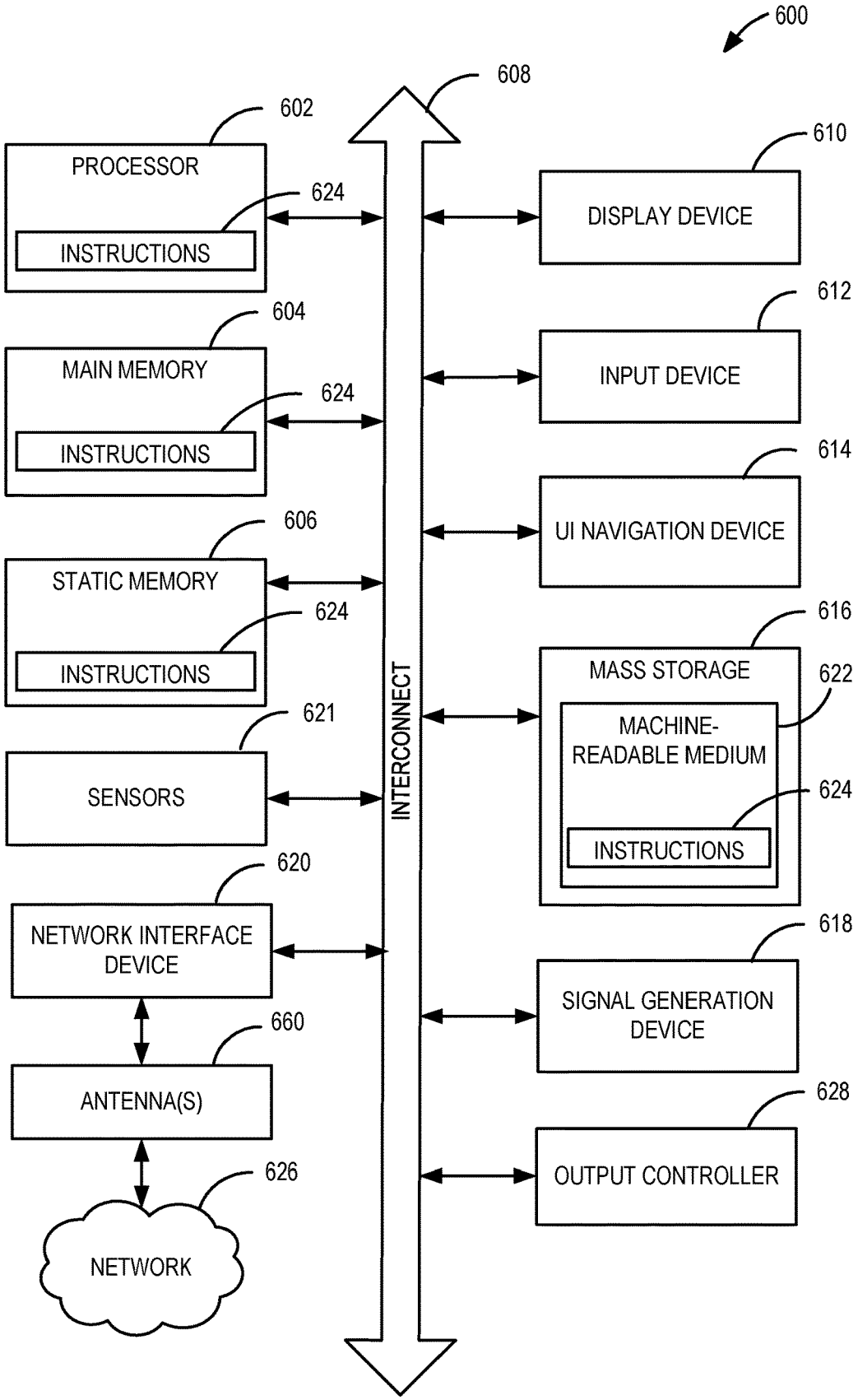
600
608
602
PROCESSOR
624
INSTRUCTIONS
604
MAIN MEMORY
624
INSTRUCTIONS
606
STATIC MEMORY
624
INSTRUCTIONS
621
SENSORS
620
NETWORK INTERFACE DEVICE
660
ANTENNA(S)
626
NETWORK
INTERCONNECT
610
DISPLAY DEVICE
612
INPUT DEVICE
614
UI NAVIGATION DEVICE
616
MASS STORAGE
622
MACHINE-READABLE MEDIUM
624
INSTRUCTIONS
618
SIGNAL GENERATION DEVICE
628
OUTPUT CONTROLLER

FIG. 6

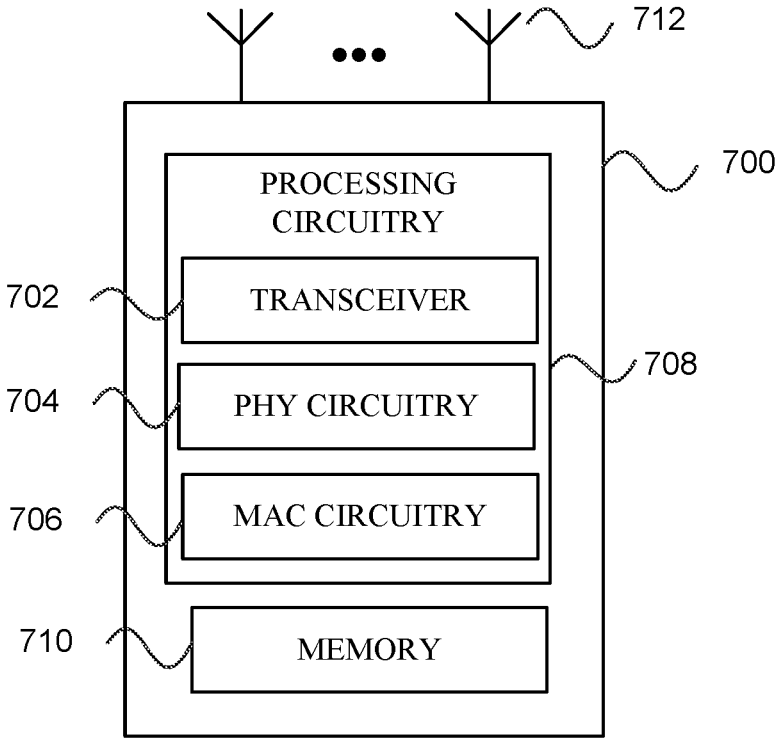
712
700
PROCESSING CIRCUITRY
702
TRANSCEIVER
708
704
PHY CIRCUITRY
706
MAC CIRCUITRY
710
MEMORY

FIG. 7

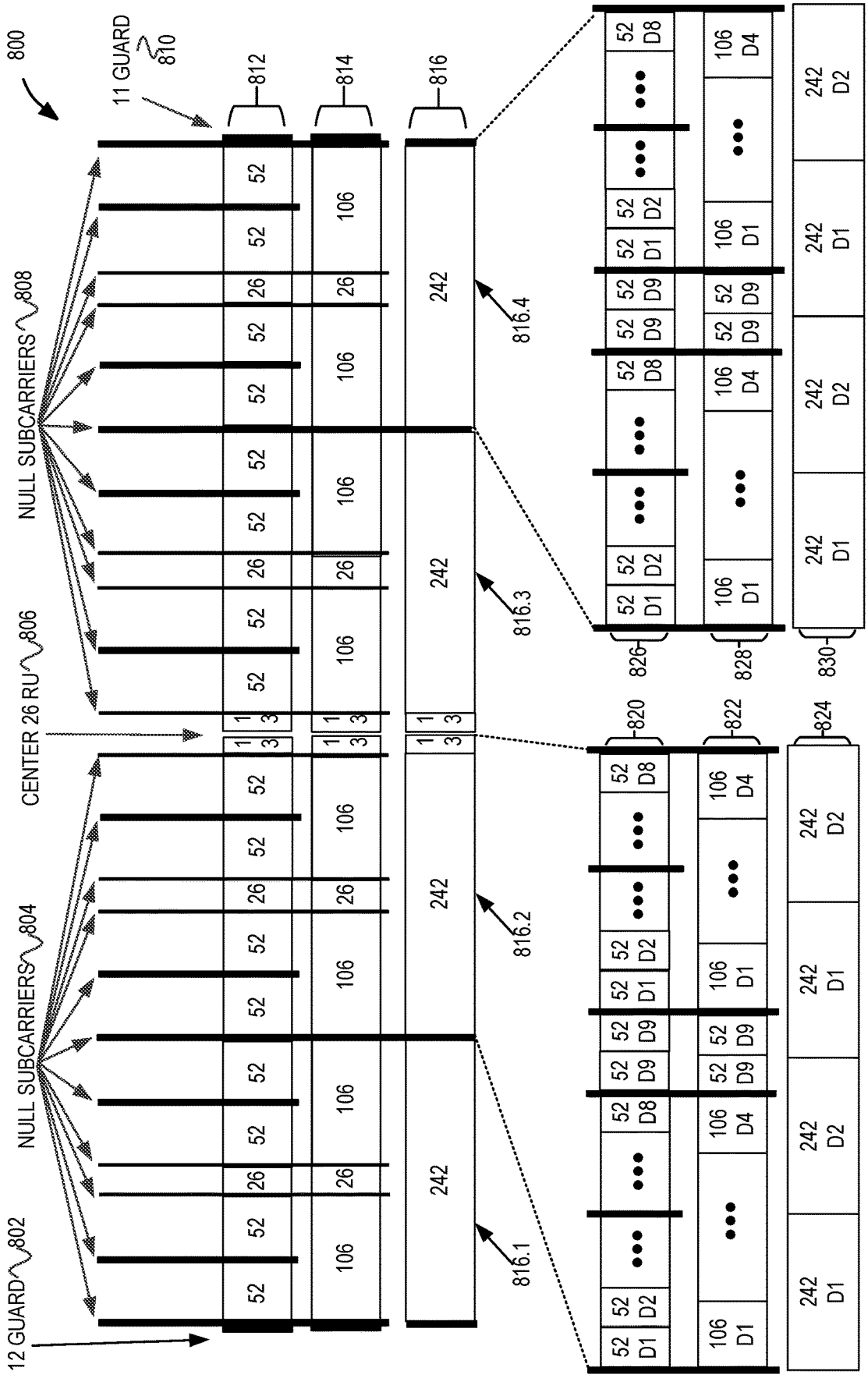
800
11 GUARD
810
812
814
816
NULL SUBCARRIERS
808
CENTER 26 RU
806
NULL SUBCARRIERS
804
12 GUARD
802
52
26
106
242
1
3
816.1
816.2
816.3
816.4
52 D1
52 D2
52 D9
52 D8
106 D1
106 D4
242 D1
242 D2
820
822
824
826
828
830

FIG. 8

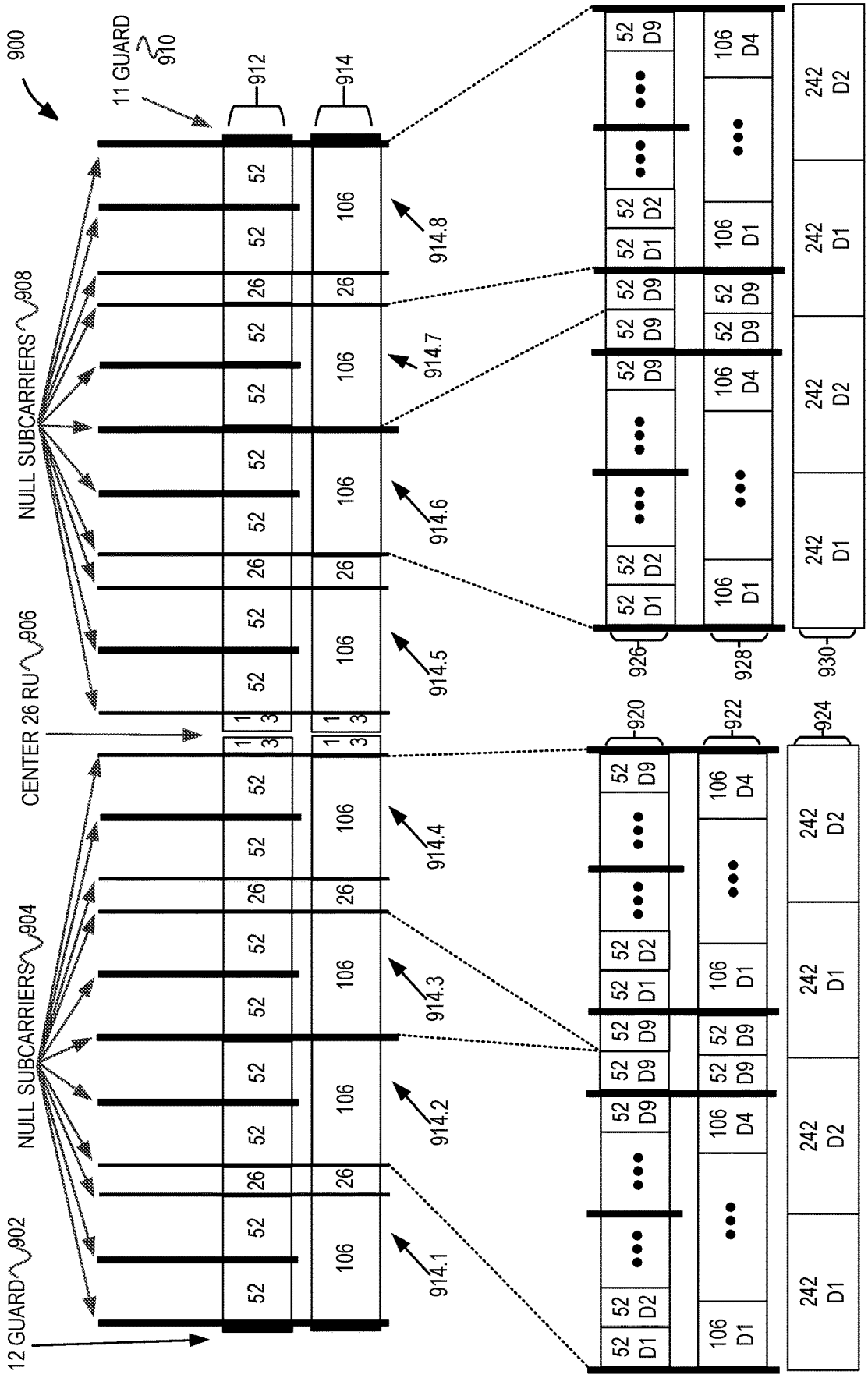
900
11 GUARD
910
912
914
12 GUARD
902
NULL SUBCARRIERS
904
CENTER 26 RU
906
NULL SUBCARRIERS
908
52
26
106
1
3
914.1
914.2
914.3
914.4
914.5
914.6
914.7
914.8
920
922
924
926
928
930
D1
D2
D4
D9
242

FIG. 9

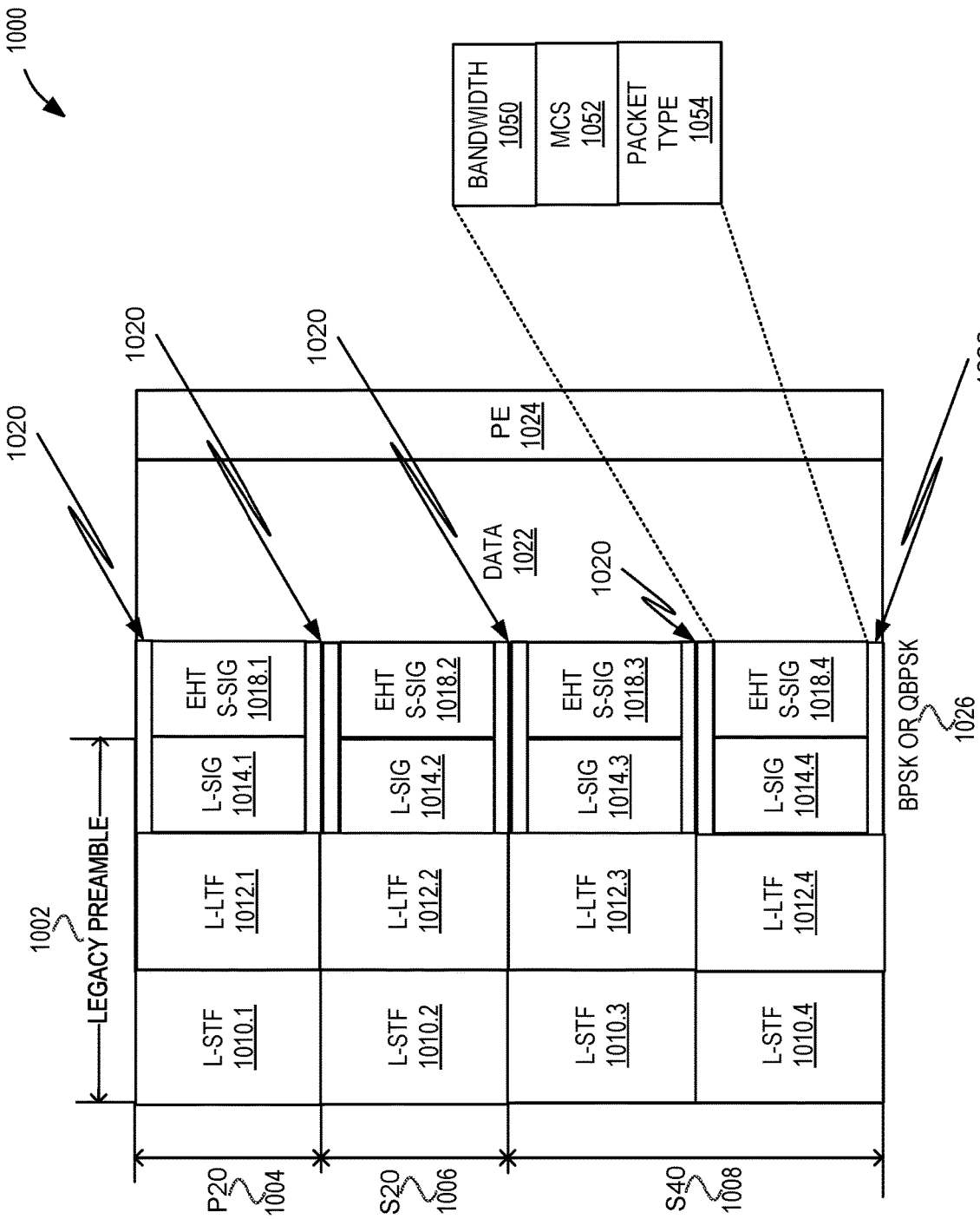
1000
BANDWIDTH 1050
MCS 1052
PACKET TYPE 1054
1020
1020
1020
1020
PE 1024
DATA 1022
EHT S-SIG 1018.1
EHT S-SIG 1018.2
EHT S-SIG 1018.3
EHT S-SIG 1018.4
L-SIG 1014.1
L-SIG 1014.2
L-SIG 1014.3
L-SIG 1014.4
L-LTF 1012.1
L-LTF 1012.2
L-LTF 1012.3
L-LTF 1012.4
L-STF 1010.1
L-STF 1010.2
L-STF 1010.3
L-STF 1010.4
1002
LEGACY PREAMBLE
BPSK OR QBPSK
1026
P20
1004
S20
1006
S40
1008

FIG. 10

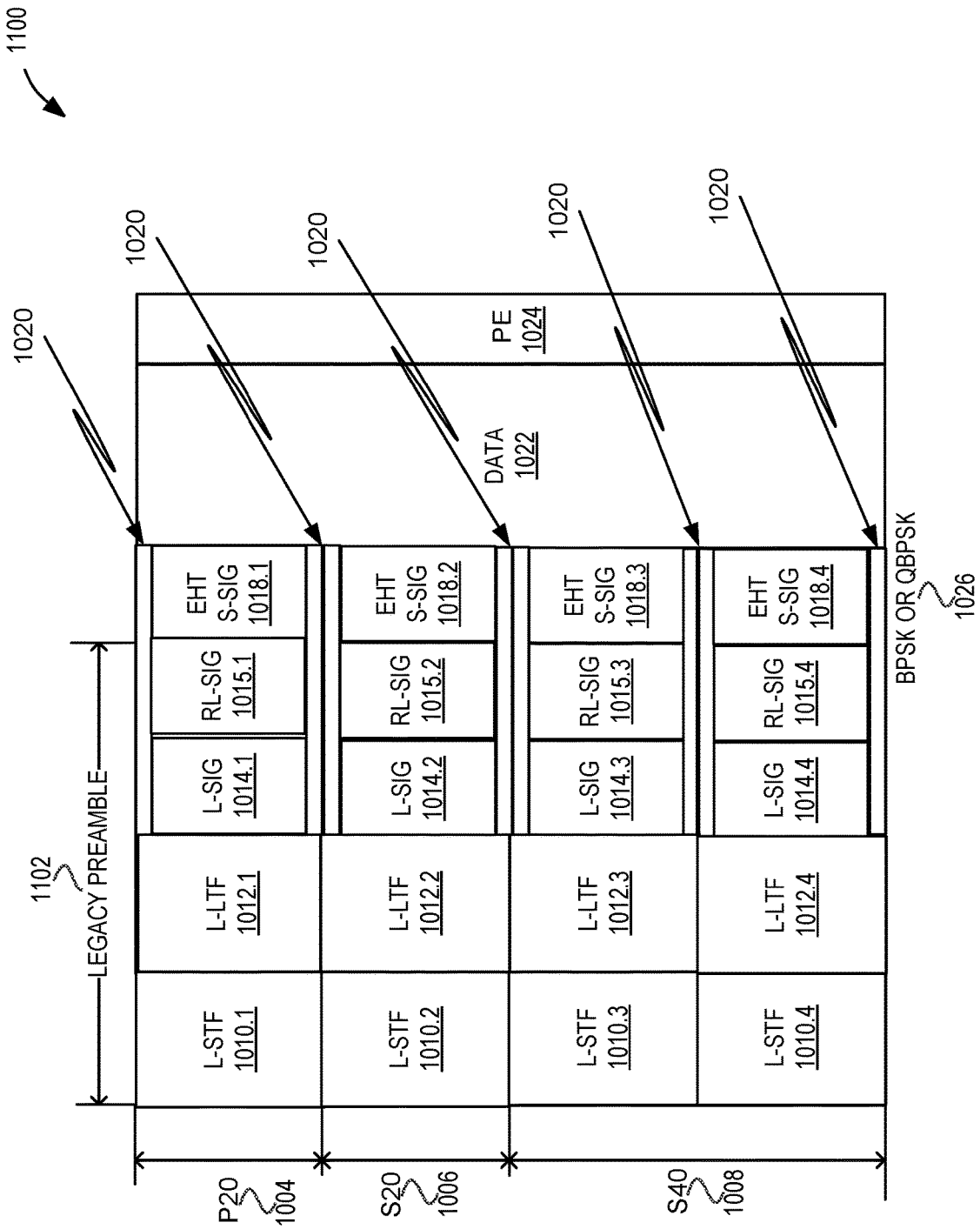
1100
1020
1020
1020
1020
PE
1024
DATA
1022
EHT
S-SIG
1018.1
EHT
S-SIG
1018.2
EHT
S-SIG
1018.3
EHT
S-SIG
1018.4
RL-SIG
1015.1
RL-SIG
1015.2
RL-SIG
1015.3
RL-SIG
1015.4
L-SIG
1014.1
L-SIG
1014.2
L-SIG
1014.3
L-SIG
1014.4
L-LTF
1012.1
L-LTF
1012.2
L-LTF
1012.3
L-LTF
1012.4
L-STF
1010.1
L-STF
1010.2
L-STF
1010.3
L-STF
1010.4
1102
LEGACY PREAMBLE
BPSK OR QBPSK
1026
P20
1004
S20
1006
S40
1008

FIG. 11

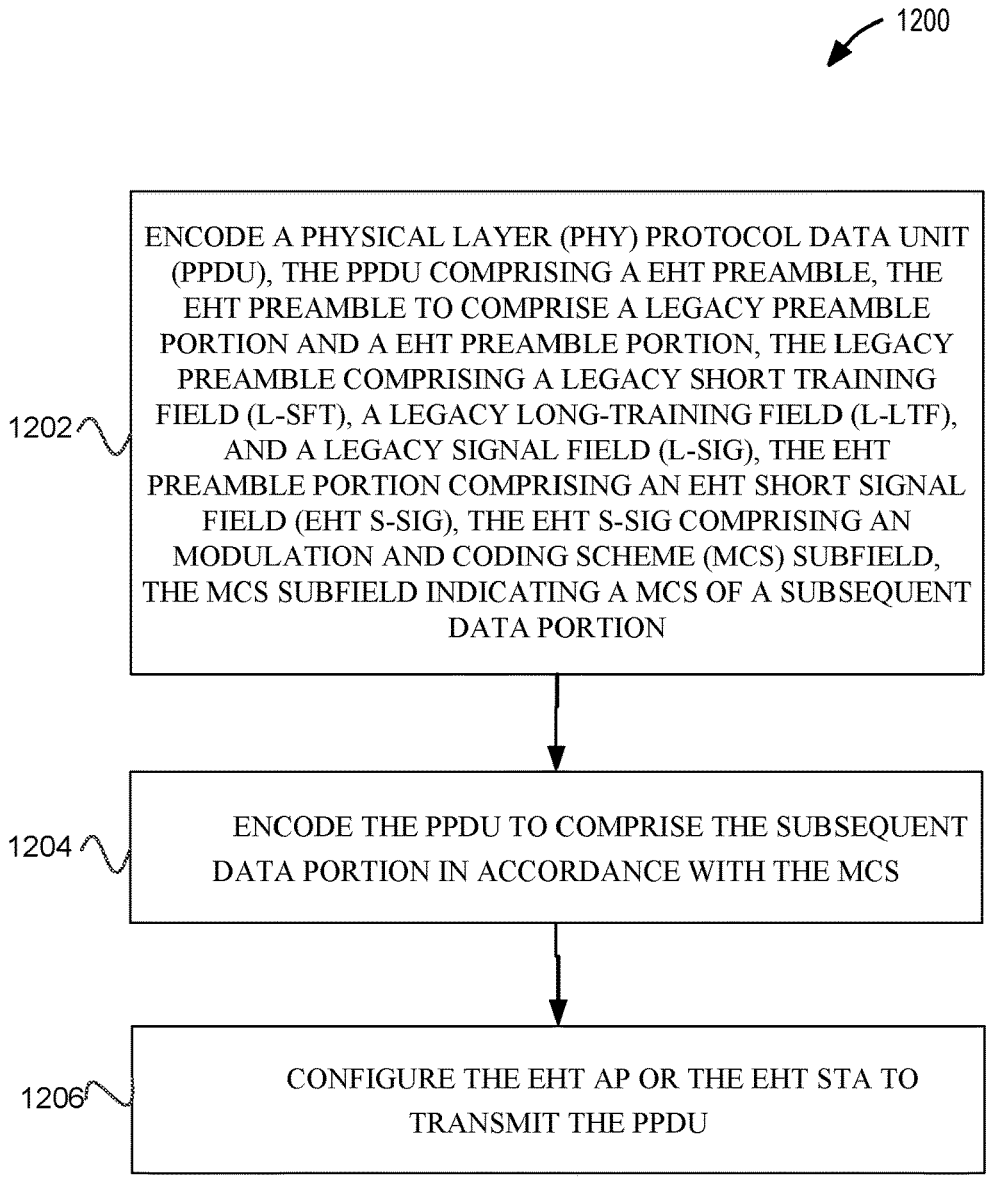
1200
1202
ENCODE A PHYSICAL LAYER (PHY) PROTOCOL DATA UNIT (PPDU), THE PPDU COMPRISING A EHT PREAMBLE, THE EHT PREAMBLE TO COMPRISE A LEGACY PREAMBLE PORTION AND A EHT PREAMBLE PORTION, THE LEGACY PREAMBLE COMPRISING A LEGACY SHORT TRAINING FIELD (L-SFT), A LEGACY LONG-TRAINING FIELD (L-LTF), AND A LEGACY SIGNAL FIELD (L-SIG), THE EHT PREAMBLE PORTION COMPRISING AN EHT SHORT SIGNAL FIELD (EHT S-SIG), THE EHT S-SIG COMPRISING AN MODULATION AND CODING SCHEME (MCS) SUBFIELD, THE MCS SUBFIELD INDICATING A MCS OF A SUBSEQUENT DATA PORTION
1204
ENCODE THE PPDU TO COMPRISE THE SUBSEQUENT DATA PORTION IN ACCORDANCE WITH THE MCS
1206
CONFIGURE THE EHT AP OR THE EHT STA TO TRANSMIT THE PPDU

FIG. 12

TONE PLANS AND PREAMBLES FOR EXTREMELY HIGH THROUGHPUT

PRIORITY CLAIM

[0001] This application claims the benefit of priority under 35 USC 119(e) to U.S. Provisional Patent Application Ser. No. 62/729,262, filed Sep. 10, 2018, and U.S. Provisional Patent Application Ser. No. 62/739,502, filed Oct. 1, 2018, each of which is incorporated herein by reference in its entirety.

TECHNICAL FIELD

[0002] Embodiments pertain to wireless networks and wireless communications. Some embodiments relate to wireless local area networks (WLANs) and Wi-Fi networks including networks operating in accordance with the IEEE 802.11 family of standards. Some embodiments relate to tone plans and preambles for extremely high throughput (EHT).

BACKGROUND

[0003] Efficient use of the resources of a wireless local-area network (WLAN) is important to provide bandwidth and acceptable response times to the users of the WLAN. However, often there are many devices trying to share the same resources and some devices may be limited by the communication protocol they use or by their hardware bandwidth. Moreover, wireless devices may need to operate with both newer protocols and with legacy device protocols.

BRIEF DESCRIPTION OF THE DRAWINGS

[0004] The present disclosure is illustrated by way of example and not limitation in the figures of the accompanying drawings, in which like references indicate similar elements and in which:

[0005] FIG. **1** is a block diagram of a radio architecture in accordance with some embodiments;

[0006] FIG. **2** illustrates a front-end module circuitry for use in the radio architecture of FIG. **1** in accordance with some embodiments;

[0007] FIG. **3** illustrates a radio IC circuitry for use in the radio architecture of FIG. **1** in accordance with some embodiments;

[0008] FIG. **4** illustrates a baseband processing circuitry for use in the radio architecture of FIG.1 in accordance with some embodiments;

[0009] FIG. **5** illustrates a WLAN in accordance with some embodiments;

[0010] FIG. **6** illustrates a block diagram of an example machine upon which any one or more of the techniques (e.g., methodologies) discussed herein may perform;

[0011] FIG. **7** illustrates a block diagram of an example wireless device upon which any one or more of the techniques (e.g., methodologies or operations) discussed herein may perform;

[0012] FIG. **8** illustrates distributed resource units (RUs) and contiguous RUs, in accordance with some embodiments;

[0013] FIG. **9** illustrates distributed RUs and contiguous RUs, in accordance with some embodiments;

[0014] FIG. **10** illustrates a low-rate preamble, in accordance with some embodiments;

[0015] FIG. **11** illustrates a low-rate preamble, in accordance with some embodiments; and

[0016] FIG. **12** illustrates a method for tone plans and preambles for extremely high throughput (EHT), in accordance with some embodiments.

DESCRIPTION

[0017] The following description and the drawings sufficiently illustrate specific embodiments to enable those skilled in the art to practice them. Other embodiments may incorporate structural, logical, electrical, process, and other changes. Portions and features of some embodiments may be included in, or substituted for, those of other embodiments. Embodiments set forth in the claims encompass all available equivalents of those claims.

[0018] Some embodiments relate to methods, computer readable media, and apparatus for ordering or scheduling location measurement reports, traffic indication maps (TIMs), and other information during SPs. Some embodiments relate to methods, computer readable media, and apparatus for extending TIMs. Some embodiments relate to methods, computer readable media, and apparatus for defining SPs during beacon intervals (BI), which may be based on TWTs.

[0019] FIG. **1** is a block diagram of a radio architecture **100** in accordance with some embodiments. Radio architecture **100** may include radio front-end module (FEM) circuitry **104**, radio IC circuitry **106** and baseband processing circuitry **108**. Radio architecture **100** as shown includes both Wireless Local Area Network (WLAN) functionality and Bluetooth (BT) functionality although embodiments are not so limited. In this disclosure, "WLAN" and "Wi-Fi" are used interchangeably.

[0020] FEM circuitry **104** may include a WLAN or Wi-Fi FEM circuitry **104**A and a Bluetooth (BT) FEM circuitry **104**B. The WLAN FEM circuitry **104**A may include a receive signal path comprising circuitry configured to operate on WLAN RF signals received from one or more antennas **101**, to amplify the received signals and to provide the amplified versions of the received signals to the WLAN radio IC circuitry **106**A for further processing. The BT FEM circuitry **104**B may include a receive signal path which may include circuitry configured to operate on BT RF signals received from one or more antennas **101**, to amplify the received signals and to provide the amplified versions of the received signals to the BT radio IC circuitry **106**B for further processing. FEM circuitry **104**A may also include a transmit signal path which may include circuitry configured to amplify WLAN signals provided by the radio IC circuitry **106**A for wireless transmission by one or more of the antennas **101**. In addition, FEM circuitry **104**B may also include a transmit signal path which may include circuitry configured to amplify BT signals provided by the radio IC circuitry **106**B for wireless transmission by the one or more antennas. In the embodiment of FIG. **1**, although FEM **104**A and FEM **104**B are shown as being distinct from one another, embodiments are not so limited, and include within their scope the use of an FEM (not shown) that includes a transmit path and/or a receive path for both WLAN and BT signals, or the use of one or more FEM circuitries where at least some of the FEM circuitries share transmit and/or receive signal paths for both WLAN and BT signals.

[0021] Radio IC circuitry **106** as shown may include WLAN radio IC circuitry **106**A and BT radio IC circuitry

106B. The WLAN radio IC circuitry **106**A may include a receive signal path which may include circuitry to down-convert WLAN RF signals received from the FEM circuitry **104**A and provide baseband signals to WLAN baseband processing circuitry **108**A. BT radio IC circuitry **106**B may in turn include a receive signal path which may include circuitry to down-convert BT RF signals received from the FEM circuitry **104**B and provide baseband signals to BT baseband processing circuitry **108**B. WLAN radio IC circuitry **106**A may also include a transmit signal path which may include circuitry to up-convert WLAN baseband signals provided by the WLAN baseband processing circuitry **108**A and provide WLAN RF output signals to the FEM circuitry **104**A for subsequent wireless transmission by the one or more antennas **101**. BT radio IC circuitry **106**B may also include a transmit signal path which may include circuitry to up-convert BT baseband signals provided by the BT baseband processing circuitry **108**B and provide BT RF output signals to the FEM circuitry **104**B for subsequent wireless transmission by the one or more antennas **101**. In the embodiment of FIG. **1**, although radio IC circuitries **106**A and **106**B are shown as being distinct from one another, embodiments are not so limited, and include within their scope the use of a radio IC circuitry (not shown) that includes a transmit signal path and/or a receive signal path for both WLAN and BT signals, or the use of one or more radio IC circuitries where at least some of the radio IC circuitries share transmit and/or receive signal paths for both WLAN and BT signals.

[0022] Baseband processing circuitry **108** may include a WLAN baseband processing circuitry **108**A and a BT baseband processing circuitry **108**B. The WLAN baseband processing circuitry **108**A may include a memory, such as, for example, a set of RAM arrays in a Fast Fourier Transform or Inverse Fast Fourier Transform block (not shown) of the WLAN baseband processing circuitry **108**A. Each of the WLAN baseband circuitry **108**A and the BT baseband circuitry **108**B may further include one or more processors and control logic to process the signals received from the corresponding WLAN or BT receive signal path of the radio IC circuitry **106**, and to also generate corresponding WLAN or BT baseband signals for the transmit signal path of the radio IC circuitry **106**. Each of the baseband processing circuitries **108**A and **108**B may further include physical layer (PHY) and medium access control layer (MAC) circuitry, and may further interface with application processor **111** for generation and processing of the baseband signals and for controlling operations of the radio IC circuitry **106**.

[0023] Referring still to FIG. **1**, according to the shown embodiment, WLAN-BT coexistence circuitry **113** may include logic providing an interface between the WLAN baseband circuitry **108**A and the BT baseband circuitry **108**B to enable use cases requiring WLAN and BT coexistence. In addition, a switch **103** may be provided between the WLAN FEM circuitry **104**A and the BT FEM circuitry **104**B to allow switching between the WLAN and BT radios according to application needs. In addition, although the antennas **101** are depicted as being respectively connected to the WLAN FEM circuitry **104**A and the BT FEM circuitry **104**B, embodiments include within their scope the sharing of one or more antennas as between the WLAN and BT FEMs, or the provision of more than one antenna connected to each of FEM **104**A or **104**B.

[0024] In some embodiments, the front-end module circuitry **104**, the radio IC circuitry **106**, and baseband processing circuitry **108** may be provided on a single radio card, such as wireless radio card **102**. In some other embodiments, the one or more antennas **101**, the FEM circuitry **104** and the radio IC circuitry **106** may be provided on a single radio card. In some other embodiments, the radio IC circuitry **106** and the baseband processing circuitry **108** may be provided on a single chip or IC, such as IC **112**.

[0025] In some embodiments, the wireless radio card **102** may include a WLAN radio card and may be configured for Wi-Fi communications, although the scope of the embodiments is not limited in this respect. In some of these embodiments, the radio architecture **100** may be configured to receive and transmit orthogonal frequency division multiplexed (OFDM) or orthogonal frequency division multiple access (OFDMA) communication signals over a multicarrier communication channel. The OFDM or OFDMA signals may comprise a plurality of orthogonal subcarriers.

[0026] In some of these multicarrier embodiments, radio architecture **100** may be part of a Wi-Fi communication station (STA) such as a wireless access point (AP), a base station or a mobile device including a Wi-Fi device. In some of these embodiments, radio architecture **100** may be configured to transmit and receive signals in accordance with specific communication standards and/or protocols, such as any of the Institute of Electrical and Electronics Engineers (IEEE) standards including, IEEE 802.11n-2009, IEEE 802.11-2012, IEEE 802.11-2016, IEEE 802.11ac, and/or IEEE 802.11ax standards and/or proposed specifications for WLANs, although the scope of embodiments is not limited in this respect. Radio architecture **100** may also be suitable to transmit and/or receive communications in accordance with other techniques and standards.

[0027] In some embodiments, the radio architecture **100** may be configured for high-efficiency (HE) Wi-Fi (HEW) communications in accordance with the IEEE 802.11ax standard. In these embodiments, the radio architecture **100** may be configured to communicate in accordance with an OFDMA technique, although the scope of the embodiments is not limited in this respect.

[0028] In some other embodiments, the radio architecture **100** may be configured to transmit and receive signals transmitted using one or more other modulation techniques such as spread spectrum modulation (e.g., direct sequence code division multiple access (DS-CDMA) and/or frequency hopping code division multiple access (FH-CDMA)), time-division multiplexing (TDM) modulation, and/or frequency-division multiplexing (FDM) modulation, although the scope of the embodiments is not limited in this respect.

[0029] In some embodiments, as further shown in FIG. **1**, the BT baseband circuitry **108**B may be compliant with a Bluetooth (BT) connectivity standard such as Bluetooth, Bluetooth 4.0 or Bluetooth 5.0, or any other iteration of the Bluetooth Standard. In embodiments that include BT functionality as shown for example in FIG. **1**, the radio architecture **100** may be configured to establish a BT synchronous connection oriented (SCO) link and/or a BT low energy (BT LE) link. In some of the embodiments that include functionality, the radio architecture **100** may be configured to establish an extended SCO (eSCO) link for BT communications, although the scope of the embodiments is not limited in this respect. In some of these embodiments that

include a BT functionality, the radio architecture may be configured to engage in a BT Asynchronous Connection-Less (ACL) communications, although the scope of the embodiments is not limited in this respect. In some embodiments, as shown in FIG. **1**, the functions of a BT radio card and WLAN radio card may be combined on a single wireless radio card, such as single wireless radio card **102**, although embodiments are not so limited, and include within their scope discrete WLAN and BT radio cards

[0030] In some embodiments, the radio-architecture **100** may include other radio cards, such as a cellular radio card configured for cellular (e.g., 3GPP such as LTE, LTE-Advanced or 5G communications).

[0031] In some IEEE 802.11 embodiments, the radio architecture **100** may be configured for communication over various channel bandwidths including bandwidths having center frequencies of about 900 MHz, 2.4 GHz, 5 GHz, and bandwidths of about 1 MHz, 2 MHz, 2.5 MHz, 4 MHz, 5 MHz, 8 MHz, 10 MHz, 16 MHz, 20 MHz, 40 MHz, 80 MHz (with contiguous bandwidths) or 80+80 MHz (160 MHz) (with non-contiguous bandwidths). In some embodiments, a 320 MHz channel bandwidth may be used. The scope of the embodiments is not limited with respect to the above center frequencies however.

[0032] FIG. **2** illustrates FEM circuitry **200** in accordance with some embodiments. The FEM circuitry **200** is one example of circuitry that may be suitable for use as the WLAN and/or BT FEM circuitry **104**A/**104**B (FIG. **1**), although other circuitry configurations may also be suitable.

[0033] In some embodiments, the FEM circuitry **200** may include a TX/RX switch **202** to switch between transmit mode and receive mode operation. The FEM circuitry **200** may include a receive signal path and a transmit signal path. The receive signal path of the FEM circuitry **200** may include a low-noise amplifier (LNA) **206** to amplify received RF signals **203** and provide the amplified received RF signals **207** as an output (e.g., to the radio IC circuitry **106** (FIG. **1**)). The transmit signal path of the circuitry **200** may include a power amplifier (PA) to amplify input RF signals **209** (e.g., provided by the radio IC circuitry **106**), and one or more filters **212**, such as band-pass filters (BPFs), low-pass filters (LPFs) or other types of filters, to generate RF signals **215** for subsequent transmission (e.g., by one or more of the antennas **101** (FIG. **1**)).

[0034] In some dual-mode embodiments for Wi-Fi communication, the FEM circuitry **200** may be configured to operate in either the 2.4 GHz frequency spectrum or the 5 GHz frequency spectrum. In these embodiments, the receive signal path of the FEM circuitry **200** may include a receive signal path duplexer **204** to separate the signals from each spectrum as well as provide a separate LNA **206** for each spectrum as shown. In these embodiments, the transmit signal path of the FEM circuitry **200** may also include a power amplifier **210** and a filter **212**, such as a BPF, a LPF or another type of filter for each frequency spectrum and a transmit signal path duplexer **214** to provide the signals of one of the different spectrums onto a single transmit path for subsequent transmission by the one or more of the antennas **101** (FIG. **1**). In some embodiments, BT communications may utilize the 2.4 GHZ signal paths and may utilize the same FEM circuitry **200** as the one used for WLAN communications.

[0035] FIG. **3** illustrates radio integrated circuit (IC) circuitry **300** in accordance with some embodiments. The radio IC circuitry **300** is one example of circuitry that may be suitable for use as the WLAN or BT radio IC circuitry **106**A/**106**B (FIG. **1**), although other circuitry configurations may also be suitable.

[0036] In some embodiments, the radio IC circuitry **300** may include a receive signal path and a transmit signal path. The receive signal path of the radio IC circuitry **300** may include at least mixer circuitry **302**, such as, for example, down-conversion mixer circuitry, amplifier circuitry **306** and filter circuitry **308**. The transmit signal path of the radio IC circuitry **300** may include at least filter circuitry **312** and mixer circuitry **314**, such as, for example, up-conversion mixer circuitry. Radio IC circuitry **300** may also include synthesizer circuitry **304** for synthesizing a frequency **305** for use by the mixer circuitry **302** and the mixer circuitry **314**. The mixer circuitry **302** and/or **314** may each, according to some embodiments, be configured to provide direct conversion functionality. The latter type of circuitry presents a much simpler architecture as compared with standard super-heterodyne mixer circuitries, and any flicker noise brought about by the same may be alleviated for example through the use of OFDM modulation. FIG. **3** illustrates only a simplified version of a radio IC circuitry, and may include, although not shown, embodiments where each of the depicted circuitries may include more than one component. For instance, mixer circuitry **320** and/or **314** may each include one or more mixers, and filter circuitries **308** and/or **312** may each include one or more filters, such as one or more BPFs and/or LPFs according to application needs. For example, when mixer circuitries are of the direct-conversion type, they may each include two or more mixers.

[0037] In some embodiments, mixer circuitry **302** may be configured to down-convert RF signals **207** received from the FEM circuitry **104** (FIG. **1**) based on the synthesized frequency **305** provided by synthesizer circuitry **304**. The amplifier circuitry **306** may be configured to amplify the down-converted signals and the filter circuitry **308** may include a LPF configured to remove unwanted signals from the down-converted signals to generate output baseband signals **307**. Output baseband signals **307** may be provided to the baseband processing circuitry **108** (FIG. **1**) for further processing. In some embodiments, the output baseband signals **307** may be zero-frequency baseband signals, although this is not a requirement. In some embodiments, mixer circuitry **302** may comprise passive mixers, although the scope of the embodiments is not limited in this respect.

[0038] In some embodiments, the mixer circuitry **314** may be configured to up-convert input baseband signals **311** based on the synthesized frequency **305** provided by the synthesizer circuitry **304** to generate RF output signals **209** for the FEM circuitry **104**. The baseband signals **311** may be provided by the baseband processing circuitry **108** and may be filtered by filter circuitry **312**. The filter circuitry **312** may include a LPF or a BPF, although the scope of the embodiments is not limited in this respect.

[0039] In some embodiments, the mixer circuitry **302** and the mixer circuitry **314** may each include two or more mixers and may be arranged for quadrature down-conversion and/or up-conversion respectively with the help of synthesizer **304**. In some embodiments, the mixer circuitry **302** and the mixer circuitry **314** may each include two or more mixers each configured for image rejection (e.g., Hartley image rejection). In some embodiments, the mixer circuitry **302** and the mixer circuitry **314** may be arranged

for direct down-conversion and/or direct up-conversion, respectively. In some embodiments, the mixer circuitry **302** and the mixer circuitry **314** may be configured for superheterodyne operation, although this is not a requirement.

[0040] Mixer circuitry **302** may comprise, according to one embodiment: quadrature passive mixers (e.g., for the in-phase (I) and quadrature phase (Q) paths). In such an embodiment, RF input signal **207** from FIG. **3** may be down-converted to provide I and Q baseband output signals to be sent to the baseband processor

[0041] Quadrature passive mixers may be driven by zero and ninety-degree time-varying LO switching signals provided by a quadrature circuitry which may be configured to receive a LO frequency (f_{LO}) from a local oscillator or a synthesizer, such as LO frequency **305** of synthesizer **304** (FIG. **3**). In some embodiments, the LO frequency may be the carrier frequency, while in other embodiments, the LO frequency may be a fraction of the carrier frequency (e.g., one-half the carrier frequency, one-third the carrier frequency). In some embodiments, the zero and ninety-degree time-varying switching signals may be generated by the synthesizer, although the scope of the embodiments is not limited in this respect.

[0042] In some embodiments, the LO signals may differ in duty cycle (the percentage of one period in which the LO signal is high) and/or offset (the difference between start points of the period). In some embodiments, the LO signals may have a 25% duty cycle and a 50% offset. In some embodiments, each branch of the mixer circuitry (e.g., the in-phase (I) and quadrature phase (Q) path) may operate at a 25% duty cycle, which may result in a significant reduction is power consumption.

[0043] The RF input signal **207** (FIG. **2**) may comprise a balanced signal, although the scope of the embodiments is not limited in this respect. The I and Q baseband output signals may be provided to low-nose amplifier, such as amplifier circuitry **306** (FIG. **3**) or to filter circuitry **308** (FIG. **3**).

[0044] In some embodiments, the output baseband signals **307** and the input baseband signals **311** may be analog baseband signals, although the scope of the embodiments is not limited in this respect. In some alternate embodiments, the output baseband signals **307** and the input baseband signals **311** may be digital baseband signals. In these alternate embodiments, the radio IC circuitry may include analog-to-digital converter (ADC) and digital-to-analog converter (DAC) circuitry.

[0045] In some dual-mode embodiments, a separate radio IC circuitry may be provided for processing signals for each spectrum, or for other spectrums not mentioned here, although the scope of the embodiments is not limited in this respect.

[0046] In some embodiments, the synthesizer circuitry **304** may be a fractional-N synthesizer or a fractional N/N+1 synthesizer, although the scope of the embodiments is not limited in this respect as other types of frequency synthesizers may be suitable. For example, synthesizer circuitry **304** may be a delta-sigma synthesizer, a frequency multiplier, or a synthesizer comprising a phase-locked loop with a frequency divider. According to some embodiments, the synthesizer circuitry **304** may include digital synthesizer circuitry. An advantage of using a digital synthesizer circuitry is that, although it may still include some analog components, its footprint may be scaled down much more than the footprint of an analog synthesizer circuitry. In some embodiments, frequency input into synthesizer circuitry **304** may be provided by a voltage controlled oscillator (VCO), although that is not a requirement. A divider control input may further be provided by either the baseband processing circuitry **108** (FIG. **1**) or the application processor **111** (FIG. **1**) depending on the desired output frequency **305**. In some embodiments, a divider control input (e.g., N) may be determined from a look-up table (e.g., within a Wi-Fi card) based on a channel number and a channel center frequency as determined or indicated by the application processor **111**.

[0047] In some embodiments, synthesizer circuitry **304** may be configured to generate a carrier frequency as the output frequency **305**, while in other embodiments, the output frequency **305** may be a fraction of the carrier frequency (e.g., one-half the carrier frequency, one-third the carrier frequency). In some embodiments, the output frequency **305** may be a LO frequency (f_{LO}).

[0048] FIG. **4** illustrates a functional block diagram of baseband processing circuitry **400** in accordance with some embodiments. The baseband processing circuitry **400** is one example of circuitry that may be suitable for use as the baseband processing circuitry **108** (FIG. **1**), although other circuitry configurations may also be suitable. The baseband processing circuitry **400** may include a receive baseband processor (RX BBP) **402** for processing receive baseband signals **309** provided by the radio IC circuitry **106** (FIG. **1**) and a transmit baseband processor (TX BBP) **404** for generating transmit baseband signals **311** for the radio IC circuitry **106**. The baseband processing circuitry **400** may also include control logic **406** for coordinating the operations of the baseband processing circuitry **400**.

[0049] In some embodiments (e.g., when analog baseband signals are exchanged between the baseband processing circuitry **400** and the radio IC circuitry **106**), the baseband processing circuitry **400** may include ADC **410** to convert analog baseband signals received from the radio IC circuitry **106** to digital baseband signals for processing by the RX BBP **402**. In these embodiments, the baseband processing circuitry **400** may also include DAC **412** to convert digital baseband signals from the TX BBP **404** to analog baseband signals.

[0050] In some embodiments that communicate OFDM signals or OFDMA signals, such as through baseband processor **108**A, the transmit baseband processor **404** may be configured to generate OFDM or OFDMA signals as appropriate for transmission by performing an inverse fast Fourier transform (IFFT). The receive baseband processor **402** may be configured to process received OFDM signals or OFDMA signals by performing an FFT. In some embodiments, the receive baseband processor **402** may be configured to detect the presence of an OFDM signal or OFDMA signal by performing an autocorrelation, to detect a preamble, such as a short preamble, and by performing a cross-correlation, to detect a long preamble. The preambles may be part of a predetermined frame structure for Wi-Fi communication.

[0051] Referring to FIG. **1**, in some embodiments, the antennas **101** (FIG. **1**) may each comprise one or more directional or omnidirectional antennas, including, for example, dipole antennas, monopole antennas, patch antennas, loop antennas, microstrip antennas or other types of antennas suitable for transmission of RF signals. In some multiple-input multiple-output (MIMO) embodiments, the

antennas may be effectively separated to take advantage of spatial diversity and the different channel characteristics that may result. Antennas **101** may each include a set of phased-array antennas, although embodiments are not so limited.

[0052] Although the radio-architecture **100** is illustrated as having several separate functional elements, one or more of the functional elements may be combined and may be implemented by combinations of software-configured elements, such as processing elements including digital signal processors (DSPs), and/or other hardware elements. For example, some elements may comprise one or more microprocessors, DSPs, field-programmable gate arrays (FPGAs), application specific integrated circuits (ASICs), radio-frequency integrated circuits (RFICs) and combinations of various hardware and logic circuitry for performing at least the functions described herein. In some embodiments, the functional elements may refer to one or more processes operating on one or more processing elements.

[0053] FIG. **5** illustrates a WLAN **500** in accordance with some embodiments. The WLAN **500** may comprise a basis service set (BSS) that may include a HE access point (AP) **502**, which may be termed an AP, a plurality of HE (e.g., IEEE 802.11ax) stations (STAs) **504**, and a plurality of legacy (e.g., IEEE 802.11g/n/ac) devices **506**. In some embodiments, the HE STAs **504** and/or AP **502** are configured to operate in accordance with IEEE 802.11 extremely high throughput (EHT). In some embodiments, the HE STAs **504** and/or HE AP **520** are configured to operate in accordance with IEEE 802.11az. In some embodiments, IEEE 802.11EHT may be termed Next Generation 802.11. In some embodiments, the AP **502** may be configured to operate a HE BSS, ER BSS, and/or a BSS. Legacy devices may not be able to operate in the HE BSS and beacon frames in the HE BSS may be transmitted using HE PPDU's. An ER BSS may use ER PPDUs to transmit the beacon frames and legacy devices **504** may not be able to decode the beacon frames and thus are not able to operate in a ER BSS. The BSSs, e.g., BSS, ER BSS, and HE BSS, may used different BSSIDs.

[0054] The AP **502** may be an AP configured to operate in accordance with IEEE 802.11 to transmit and receive. The AP **502** may be a base station. The AP **502** may use other communications protocols as well as the IEEE 802.11 protocol. The IEEE 802.11 protocol may be IEEE 802.11ax. The IEEE 802.11 protocol may be IEEE 802.11 next generation. The EHT protocol may be termed a different name in accordance with some embodiments. In some embodiments, IEEE 802.11 EHT is termed IEEE 802.11be. The IEEE 802.11 protocol may include using orthogonal frequency division multiple-access (OFDMA), time division multiple access (TDMA), and/or code division multiple access (CDMA). The IEEE 802.11 protocol may include a multiple access technique. For example, the IEEE 802.11 protocol may include space-division multiple access (SDMA) and/or multiple-user multiple-input multiple-output (MU-MIMO). There may be more than one EHT AP **502** that is part of an extended service set (ESS). A controller (not illustrated) may store information that is common to the more than one HE APs **502** and may control more than one BSS, e.g., assign primary channels, colors, etc. AP **502** may be connected to the internet.

[0055] The legacy devices **506** may operate in accordance with one or more of IEEE 802.11 a/b/g/n/ac/ad/af/ah/aj/ay, or another legacy wireless communication standard. The legacy devices **506** may be STAs or IEEE STAs. In some embodiments, when the AP **502** and HE STAs **504** are configured to operate in accordance with IEEE 802.11EHT, the legacy devices **506** may include devices that are configured to operate in accordance with IEEE 802.11ax. The HE STAs **504** may be wireless transmit and receive devices such as cellular telephone, portable electronic wireless communication devices, smart telephone, handheld wireless device, wireless glasses, wireless watch, wireless personal device, tablet, or another device that may be transmitting and receiving using the IEEE 802.11 protocol such as IEEE 802.11EHT or another wireless protocol. In some embodiments, the HE STAs **504** may be termed extremely high throughput (EHT) stations or stations.

[0056] The AP **502** may communicate with legacy devices **506** in accordance with legacy IEEE 802.11 communication techniques. In example embodiments, the AP **502** may also be configured to communicate with HE STAs **504** in accordance with legacy IEEE 802.11 communication techniques.

[0057] In some embodiments, a HE or EHT frame may be configurable to have the same bandwidth as a channel. The HE or EHT frame may be a physical Layer Convergence Procedure (PLCP) Protocol Data Unit (PPDU). In some embodiments, there may be different types of PPDUs that may have different fields and different physical layers and/or different media access control (MAC) layers. For example, a single user (SU) PPDU, multiple-user (MU) PPDU, extended-range (ER) SU PPDU, and/or trigger-based (TB) PPDU. In some embodiments EHT may be the same or similar as HE PPDUs.

[0058] The bandwidth of a channel may be 20 MHz, 40 MHz, or 80 MHz, 80+80 MHz, 160 MHz, 160+160 MHz, 320 MHz, 320+320 MHz, 640 MHz bandwidths. In some embodiments, the bandwidth of a channel less than 20 MHz may be 1 MHz, 1.25 MHz, 2.03 MHz, 2.5 MHz, 4.06 MHz, 5 MHz and 10 MHz, or a combination thereof or another bandwidth that is less or equal to the available bandwidth may also be used. In some embodiments the bandwidth of the channels may be based on a number of active data subcarriers. In some embodiments the bandwidth of the channels is based on 26, 52, 106, 242, 484, 996, or 2×996 active data subcarriers or tones that are spaced by 20 MHz. In some embodiments the bandwidth of the channels is 256 tones spaced by 20 MHz. In some embodiments the channels are multiple of 26 tones or a multiple of 20 MHz. In some embodiments a 20 MHz channel may comprise 242 active data subcarriers or tones, which may determine the size of a Fast Fourier Transform (FFT). An allocation of a bandwidth or a number of tones or sub-carriers may be termed a resource unit (RU) allocation in accordance with some embodiments.

[0059] In some embodiments, the 26-subcarrier RU and 52-subcarrier RU are used in the 20 MHz, 40 MHz, 80 MHz, 160 MHz and 80+80 MHz OFDMA HE PPDU formats. In some embodiments, the 106-subcarrier RU is used in the 20 MHz, 40 MHz, 80 MHz, 160 MHz and 80+80 MHz OFDMA and MU-MIMO HE PPDU formats. In some embodiments, the 242-subcarrier RU is used in the 40 MHz, 80 MHz, 160 MHz and 80+80 MHz OFDMA and MU-MIMO HE PPDU formats. In some embodiments, the 484-subcarrier RU is used in the 80 MHz, 160 MHz and 80+80 MHz OFDMA and MU-MIMO HE PPDU formats. In some embodiments, the 996-subcarrier RU is used in the 160 MHz and 80+80 MHz OFDMA and MU-MIMO HE PPDU formats.

[0060] A HE or EHT frame may be configured for transmitting a number of spatial streams, which may be in accordance with MU-MIMO and may be in accordance with OFDMA. In other embodiments, the AP **502**, HE STA **504**, and/or legacy device **506** may also implement different technologies such as code division multiple access (CDMA) 2000, CDMA 2000 1X, CDMA 2000 Evolution-Data Optimized (EV-DO), Interim Standard 2000 (IS-2000), Interim Standard 95 (IS-95), Interim Standard 856 (IS-856), Long Term Evolution (LTE), Global System for Mobile communications (GSM), Enhanced Data rates for GSM Evolution (EDGE), GSM EDGE (GERAN), IEEE 802.16 (i.e., Worldwide Interoperability for Microwave Access (WiMAX)), BlueTooth®, low-power BlueTooth®, or other technologies.

[0061] In accordance with some IEEE 802.11 embodiments, e.g., IEEE 802.11EHT/ax embodiments, an AP **502** may operate as a master station which may be arranged to contend for a wireless medium (e.g., during a contention period) to receive exclusive control of the medium for a transmission opportunity (TXOP). The AP **502** may transmit an EHT/HE trigger frame transmission, which may include a schedule for simultaneous UL transmissions from HE STAs **504**. The AP **502** may transmit a time duration of the TXOP and sub-channel information. During the TXOP, HE STAs **504** may communicate with the AP **502** in accordance with a non-contention based multiple access technique such as OFDMA or MU-MIMO. This is unlike conventional WLAN communications in which devices communicate in accordance with a contention-based communication technique, rather than a multiple access technique. During the HE or EHT control period, the AP **502** may communicate with HE stations **504** using one or more HE or EHT frames. During the TXOP, the HE STAs **504** may operate on a sub-channel smaller than the operating range of the AP **502**. During the TXOP, legacy stations refrain from communicating. The legacy stations may need to receive the communication from the AP **502** to defer from communicating.

[0062] In accordance with some embodiments, during the TXOP the HE STAs **504** may contend for the wireless medium with the legacy devices **506** being excluded from contending for the wireless medium during the master-sync transmission. In some embodiments the trigger frame may indicate an UL-MU-MIMO and/or UL OFDMA TXOP. In some embodiments, the trigger frame may include a DL UL-MU-MIMO and/or DL OFDMA with a schedule indicated in a preamble portion of trigger frame.

[0063] In some embodiments, the multiple-access technique used during the HE or EHT TXOP may be a scheduled OFDMA technique, although this is not a requirement. In some embodiments, the multiple access technique may be a time-division multiple access (TDMA) technique or a frequency division multiple access (FDMA) technique. In some embodiments, the multiple access technique may be a space-division multiple access (SDMA) technique. In some embodiments, the multiple access technique may be a Code division multiple access (CDMA).

[0064] The AP **502** may also communicate with legacy stations **506** and/or HE stations **504** in accordance with legacy IEEE 802.11 communication techniques.

[0065] In some embodiments, the AP **502** may also be configurable to communicate with HE stations **504** outside the HE TXOP in accordance with legacy IEEE 802.11 or IEEE 802.11EHT/ax communication techniques, although this is not a requirement.

[0066] In some embodiments the station **504** may be a "group owner" (GO) for peer-to-peer modes of operation. A wireless device may be a HE station **502** or an AP **502**.

[0067] In some embodiments, the HE STA **504** and/or AP **502** may be configured to operate in accordance with IEEE 802.11mc. In example embodiments, the radio architecture of FIG. **1** is configured to implement the HE STA **504** and/or the AP **502**. In example embodiments, the front-end module circuitry of FIG. **2** is configured to implement the HE STA **504** and/or the AP **502**. In example embodiments, the radio IC circuitry of FIG. **3** is configured to implement the station **504** and/or the AP **502**. In example embodiments, the base-band processing circuitry of FIG. **4** is configured to implement the station **504** and/or the AP **502**.

[0068] In example embodiments, the HE stations **504**, AP **502**, an apparatus of the HE stations **504**, and/or an apparatus of the AP **502** may include one or more of the following: the radio architecture of FIG. **1**, the front-end module circuitry of FIG. **2**, the radio IC circuitry of FIG. **3**, and/or the base-band processing circuitry of FIG. **4**.

[0069] In example embodiments, the radio architecture of FIG. **1**, the front-end module circuitry of FIG. **2**, the radio IC circuitry of FIG. **3**, and/or the base-band processing circuitry of FIG. **4** may be configured to perform the methods and operations/functions herein described in conjunction with FIGS. **1-11**.

[0070] In example embodiments, the station **504** and/or the AP **502** are configured to perform the methods and operations/functions described herein in conjunction with FIGS. **1-11**. In example embodiments, an apparatus of the EHT station **504** and/or an apparatus of the AP **502** are configured to perform the methods and functions described herein in conjunction with FIGS. **1-11**. The term Wi-Fi may refer to one or more of the IEEE 802.11 communication standards. AP **502** and STA **504** may refer to EHT/HE AP and/or EHT/HE.

[0071] In some embodiments, a HE AP STA may refer to an AP **502** and/or a HE STAs **504** that is operating as a HE APs **502**. In some embodiments, when a HE STA **504** is not operating as a HE AP, it may be referred to as a HE non-AP STA or HE non-AP. In some embodiments, HE STA **504** may be referred to as either a HE AP STA or a HE non-AP. AP **502** may be a HE AP and/or EHT AP **502**. Station **504** may be a HE station and/or EHT station.

[0072] In some embodiments, BSS **500** may operate on a 2.4, 5 GHz and/or 6 GHz band. Station **504** and/or AP **502** may operate on a 6 GHz band. Station **504** and/or AP **502** are configured to operate using a first protocol on the 2.4 and/or 5 GHz band than on the 6 GHz band, in accordance with some embodiments.

[0073] FIG. **6** illustrates a block diagram of an example machine **600** upon which any one or more of the techniques (e.g., methodologies) discussed herein may perform. In alternative embodiments, the machine **600** may operate as a standalone device or may be connected (e.g., networked) to other machines. In a networked deployment, the machine **600** may operate in the capacity of a server machine, a client machine, or both in server-client network environments. In an example, the machine **600** may act as a peer machine in peer-to-peer (P2P) (or other distributed) network environment. The machine **600** may be a AP **502**, EVT station **504**, personal computer (PC), a tablet PC, a set-top box (STB), a personal digital assistant (PDA), a portable communications device, a mobile telephone, a smart phone, a web appliance,

a network router, switch or bridge, or any machine capable of executing instructions (sequential or otherwise) that specify actions to be taken by that machine. Further, while only a single machine is illustrated, the term "machine" shall also be taken to include any collection of machines that individually or jointly execute a set (or multiple sets) of instructions to perform any one or more of the methodologies discussed herein, such as cloud computing, software as a service (SaaS), other computer cluster configurations.

[0074] Machine (e.g., computer system) **600** may include a hardware processor **602** (e.g., a central processing unit (CPU), a graphics processing unit (GPU), a hardware processor core, or any combination thereof), a main memory **604** and a static memory **606**, some or all of which may communicate with each other via an interlink (e.g., bus) **608**.

[0075] Specific examples of main memory **604** include Random Access Memory (RAM), and semiconductor memory devices, which may include, in some embodiments, storage locations in semiconductors such as registers. Specific examples of static memory **606** include non-volatile memory, such as semiconductor memory devices (e.g., Electrically Programmable Read-Only Memory (EPROM), Electrically Erasable Programmable Read-Only Memory (EEPROM)) and flash memory devices; magnetic disks, such as internal hard disks and removable disks; magneto-optical disks; RAM; and CD-ROM and DVD-ROM disks.

[0076] The machine **600** may further include a display device **610**, an input device **612** (e.g., a keyboard), and a user interface (UI) navigation device **614** (e.g., a mouse). In an example, the display device **610**, input device **612** and UI navigation device **614** may be a touch screen display. The machine **600** may additionally include a mass storage (e.g., drive unit) **616**, a signal generation device **618** (e.g., a speaker), a network interface device **620**, and one or more sensors **621**, such as a global positioning system (GPS) sensor, compass, accelerometer, or other sensor. The machine **600** may include an output controller **628**, such as a serial (e.g., universal serial bus (USB), parallel, or other wired or wireless (e.g., infrared(IR), near field communication (NFC), etc.) connection to communicate or control one or more peripheral devices (e.g., a printer, card reader, etc.). In some embodiments the processor **602** and/or instructions **624** may comprise processing circuitry and/or transceiver circuitry.

[0077] The storage device **616** may include a machine readable medium **622** on which is stored one or more sets of data structures or instructions **624** (e.g., software) embodying or utilized by any one or more of the techniques or functions described herein. The instructions **624** may also reside, completely or at least partially, within the main memory **604**, within static memory **606**, or within the hardware processor **602** during execution thereof by the machine **600**. In an example, one or any combination of the hardware processor **602**, the main memory **604**, the static memory **606**, or the storage device **616** may constitute machine readable media.

[0078] Specific examples of machine readable media may include: non-volatile memory, such as semiconductor memory devices (e.g., EPROM or EEPROM) and flash memory devices; magnetic disks, such as internal hard disks and removable disks; magneto-optical disks; RAM; and CD-ROM and DVD-ROM disks.

[0079] While the machine readable medium **622** is illustrated as a single medium, the term "machine readable medium" may include a single medium or multiple media (e.g., a centralized or distributed database, and/or associated caches and servers) configured to store the one or more instructions **624**.

[0080] An apparatus of the machine **600** may be one or more of a hardware processor **602** (e.g., a central processing unit (CPU), a graphics processing unit (GPU), a hardware processor core, or any combination thereof), a main memory **604** and a static memory **606**, sensors **621**, network interface device **620**, antennas **660**, a display device **610**, an input device **612**, a UI navigation device **614**, a mass storage **616**, instructions **624**, a signal generation device **618**, and an output controller **628**. The apparatus may be configured to perform one or more of the methods and/or operations disclosed herein. The apparatus may be intended as a component of the machine **600** to perform one or more of the methods and/or operations disclosed herein, and/or to perform a portion of one or more of the methods and/or operations disclosed herein. In some embodiments, the apparatus may include a pin or other means to receive power. In some embodiments, the apparatus may include power conditioning hardware.

[0081] The term "machine readable medium" may include any medium that is capable of storing, encoding, or carrying instructions for execution by the machine **600** and that cause the machine **600** to perform any one or more of the techniques of the present disclosure, or that is capable of storing, encoding or carrying data structures used by or associated with such instructions. Non-limiting machine readable medium examples may include solid-state memories, and optical and magnetic media. Specific examples of machine readable media may include: non-volatile memory, such as semiconductor memory devices (e.g., Electrically Programmable Read-Only Memory (EPROM), Electrically Erasable Programmable Read-Only Memory (EEPROM)) and flash memory devices; magnetic disks, such as internal hard disks and removable disks; magneto-optical disks; Random Access Memory (RAM); and CD-ROM and DVD-ROM disks. In some examples, machine readable media may include non-transitory machine-readable media. In some examples, machine readable media may include machine readable media that is not a transitory propagating signal.

[0082] The instructions **624** may further be transmitted or received over a communications network **626** using a transmission medium via the network interface device **620** utilizing any one of a number of transfer protocols (e.g., frame relay, internet protocol (IP), transmission control protocol (TCP), user datagram protocol (UDP), hypertext transfer protocol (HTTP), etc.). Example communication networks may include a local area network (LAN), a wide area network (WAN), a packet data network (e.g., the Internet), mobile telephone networks (e.g., cellular networks), Plain Old Telephone (POTS) networks, and wireless data networks (e.g., Institute of Electrical and Electronics Engineers (IEEE) 802.11 family of standards known as Wi-Fi®, IEEE 802.16 family of standards known as WiMax®), IEEE 802.15.4 family of standards, a Long Term Evolution (LTE) family of standards, a Universal Mobile Telecommunications System (UMTS) family of standards, peer-to-peer (P2P) networks, among others.

[0083] In an example, the network interface device **620** may include one or more physical jacks (e.g., Ethernet, coaxial, or phone jacks) or one or more antennas to connect to the communications network **626**. In an example, the

network interface device **620** may include one or more antennas **660** to wirelessly communicate using at least one of single-input multiple-output (SIMO), multiple-input multiple-output (MIMO), or multiple-input single-output (MISO) techniques. In some examples, the network interface device **620** may wirelessly communicate using Multiple User MIMO techniques. The term "transmission medium" shall be taken to include any intangible medium that is capable of storing, encoding or carrying instructions for execution by the machine **600**, and includes digital or analog communications signals or other intangible medium to facilitate communication of such software.

[0084] Examples, as described herein, may include, or may operate on, logic or a number of components, modules, or mechanisms. Modules are tangible entities (e.g., hardware) capable of performing specified operations and may be configured or arranged in a certain manner. In an example, circuits may be arranged (e.g., internally or with respect to external entities such as other circuits) in a specified manner as a module. In an example, the whole or part of one or more computer systems (e.g., a standalone, client or server computer system) or one or more hardware processors may be configured by firmware or software (e.g., instructions, an application portion, or an application) as a module that operates to perform specified operations. In an example, the software may reside on a machine readable medium. In an example, the software, when executed by the underlying hardware of the module, causes the hardware to perform the specified operations.

[0085] Accordingly, the term "module" is understood to encompass a tangible entity, be that an entity that is physically constructed, specifically configured (e.g., hardwired), or temporarily (e.g., transitorily) configured (e.g., programmed) to operate in a specified manner or to perform part or all of any operation described herein. Considering examples in which modules are temporarily configured, each of the modules need not be instantiated at any one moment in time. For example, where the modules comprise a general-purpose hardware processor configured using software, the general-purpose hardware processor may be configured as respective different modules at different times. Software may accordingly configure a hardware processor, for example, to constitute a particular module at one instance of time and to constitute a different module at a different instance of time.

[0086] Some embodiments may be implemented fully or partially in software and/or firmware. This software and/or firmware may take the form of instructions contained in or on a non-transitory computer-readable storage medium. Those instructions may then be read and executed by one or more processors to enable performance of the operations described herein. The instructions may be in any suitable form, such as but not limited to source code, compiled code, interpreted code, executable code, static code, dynamic code, and the like. Such a computer-readable medium may include any tangible non-transitory medium for storing information in a form readable by one or more computers, such as but not limited to read only memory (ROM); random access memory (RAM); magnetic disk storage media; optical storage media; flash memory, etc.

[0087] FIG. **7** illustrates a block diagram of an example wireless device 700 upon which any one or more of the techniques (e.g., methodologies or operations) discussed herein may perform. The wireless device **700** may be a HE device or HE wireless device. The wireless device **700** may be a HE STA **504**, AP **502**, and/or a HE STA or HE AP. A HE STA **504**, AP **502**, and/or a HE AP or HE STA may include some or all of the components shown in FIGS. **1-7**. The wireless device **700** may be an example machine **600** as disclosed in conjunction with FIG. **6**.

[0088] The wireless device **700** may include processing circuitry **708**. The processing circuitry **708** may include a transceiver **702**, physical layer circuitry (PHY circuitry) **704**, and MAC layer circuitry (MAC circuitry) **706**, one or more of which may enable transmission and reception of signals to and from other wireless devices **700** (e.g., AP **502**, HE STA **504**, and/or legacy devices **506**) using one or more antennas **712**. As an example, the PHY circuitry **704** may perform various encoding and decoding functions that may include formation of baseband signals for transmission and decoding of received signals. As another example, the transceiver **702** may perform various transmission and reception functions such as conversion of signals between a baseband range and a Radio Frequency (RF) range.

[0089] Accordingly, the PHY circuitry **704** and the transceiver **702** may be separate components or may be part of a combined component, e.g., processing circuitry **708**. In addition, some of the described functionality related to transmission and reception of signals may be performed by a combination that may include one, any or all of the PHY circuitry **704** the transceiver **702**, MAC circuitry **706**, memory **710**, and other components or layers. The MAC circuitry **706** may control access to the wireless medium. The wireless device **700** may also include memory **710** arranged to perform the operations described herein, e.g., some of the operations described herein may be performed by instructions stored in the memory **710**.

[0090] The antennas **712** (some embodiments may include only one antenna) may comprise one or more directional or omnidirectional antennas, including, for example, dipole antennas, monopole antennas, patch antennas, loop antennas, microstrip antennas or other types of antennas suitable for transmission of RF signals. In some multiple-input multiple-output (MIMO) embodiments, the antennas **712** may be effectively separated to take advantage of spatial diversity and the different channel characteristics that may result.

[0091] One or more of the memory **710**, the transceiver **702**, the PHY circuitry **704**, the MAC circuitry **706**, the antennas **712**, and/or the processing circuitry **708** may be coupled with one another. Moreover, although memory **710**, the transceiver **702**, the PHY circuitry **704**, the MAC circuitry **706**, the antennas **712** are illustrated as separate components, one or more of memory **710**, the transceiver **702**, the PHY circuitry **704**, the MAC circuitry **706**, the antennas **712** may be integrated in an electronic package or chip.

[0092] In some embodiments, the wireless device **700** may be a mobile device as described in conjunction with FIG. **6**. In some embodiments the wireless device **700** may be configured to operate in accordance with one or more wireless communication standards as described herein (e.g., as described in conjunction with FIGS. **1-6**, IEEE 802.11). In some embodiments, the wireless device **700** may include one or more of the components as described in conjunction with FIG. **6** (e.g., display device **610**, input device **612**, etc.) Although the wireless device **700** is illustrated as having several separate functional elements, one or more of the

functional elements may be combined and may be implemented by combinations of software-configured elements, such as processing elements including digital signal processors (DSPs), and/or other hardware elements. For example, some elements may comprise one or more microprocessors, DSPs, field-programmable gate arrays (FPGAs), application specific integrated circuits (ASICs), radio-frequency integrated circuits (RFICs) and combinations of various hardware and logic circuitry for performing at least the functions described herein. In some embodiments, the functional elements may refer to one or more processes operating on one or more processing elements.

[0093] In some embodiments, an apparatus of or used by the wireless device **700** may include various components of the wireless device **700** as shown in FIG. **7** and/or components from FIGS. **1-6**. Accordingly, techniques and operations described herein that refer to the wireless device **700** may be applicable to an apparatus for a wireless device **700** (e.g., AP **502** and/or HE STA **504**), in some embodiments. In some embodiments, the wireless device **700** is configured to decode and/or encode signals, packets, and/or frames as described herein, e.g., PPDUs.

[0094] In some embodiments, the MAC circuitry **706** may be arranged to contend for a wireless medium during a contention period to receive control of the medium for a HE TXOP and encode or decode an HE PPDU. In some embodiments, the MAC circuitry **706** may be arranged to contend for the wireless medium based on channel contention settings, a transmitting power level, and a clear channel assessment level (e.g., an energy detect level).

[0095] The PHY circuitry **704** may be arranged to transmit signals in accordance with one or more communication standards described herein. For example, the PHY circuitry **704** may be configured to transmit a HE PPDU. The PHY circuitry **704** may include circuitry for modulation/demodulation, upconversion/downconversion, filtering, amplification, etc. In some embodiments, the processing circuitry **708** may include one or more processors. The processing circuitry **708** may be configured to perform functions based on instructions being stored in a RAM or ROM, or based on special purpose circuitry. The processing circuitry **708** may include a processor such as a general purpose processor or special purpose processor. The processing circuitry **708** may implement one or more functions associated with antennas **712**, the transceiver **702**, the PHY circuitry **704**, the MAC circuitry **706**, and/or the memory **710**. In some embodiments, the processing circuitry **708** may be configured to perform one or more of the functions/operations and/or methods described herein.

[0096] In mmWave technology, communication between a station (e.g., the HE stations **504** of FIG. **5** or wireless device **700**) and an access point (e.g., the AP **502** of FIG. **5** or wireless device **700**) may use associated effective wireless channels that are highly directionally dependent. To accommodate the directionality, beamforming techniques may be utilized to radiate energy in a certain direction with certain beamwidth to communicate between two devices. The directed propagation concentrates transmitted energy toward a target device in order to compensate for significant energy loss in the channel between the two communicating devices. Using directed transmission may extend the range of the millimeter-wave communication versus utilizing the same transmitted energy in omni-directional propagation.

[0097] Table 1 illustrates data and pilot subcarrier indices for resource units (RUs) in an 80 MHz channel. The tone plane illustrated in Table 1 illustrates tone assignments. For example, for a RU type of 26-tone RU, RU 1 is allocated tones −499 to −474. Station **504** and AP **502** are configured to operate in accordance with Table 1, in accordance with some embodiments. Station **504** and AP **502** use orthogonal frequency division multiplexing (OFDM) and orthogonal frequency division multi-access (OFDMA) to transmit on the RUs of Table 1, in accordance with some embodiments.

[0098] An OFDM symbol is constructed of subcarriers, the number of which is a function of the PPDU bandwidth and are defined in Table 1. A subcarrier may be a data subcarrier, which are used for data transmission; a pilot subcarrier, which are used for phase information and parameter tracking (and data in some embodiments); or, an unused subcarrier, which are not used for either data or pilot transmission. The unused subcarriers are the DC subcarrier, the guard band subcarriers at the band edges, and the Null subcarriers. For example, see Table 1, Table 2, and FIGS. **8** and **9**. The notation [x**1**:y**1**] indicates the set of subcarriers with index k that satisfies x**1**<=k <=y**1**. The subcarrier index of 0 corresponds to the DC tone. Negative subcarrier indices correspond to subcarriers with frequency lower than the DC tone, and positive subcarrier indices correspond to subcarriers with frequency higher than the DC tone.

TABLE 1

Table 1 illustrates data and pilot subcarrier indices for resource units (RUs) in an 80 MHz channel.

RU type	RU index and subcarrier range				
26-tone RU	RU 1 [−499: −474]	RU 2 [−473: −448]	RU 3 [−445: −420]	RU 4 [−419: −394]	RU 5 [−392: −367]
	RU 6 [−365: −340]	RU 7 [−339: −314]	RU 8 [−311: −286]	RU 9 [−285: −260]	
	RU 10 [−257: −232]	RU 11 [−231: −206]	RU 12 [−203: −178]	RU 13 [−177: −152]	RU 14 [−150: −125]
	RU 15 [−123: −98]	RU 16 [−97: −72]	RU 17 [−69: −44]	RU 18 [−43: −18]	RU 19 [−16: −4, 4: 16]
	RU 20 [18: 43]	RU 21 [44: 69]	RU 22 [72: 97]	RU 23 [98: 123]	RU 24 [125: 150]
	RU 25 [152: 177]	RU 26 [178: 203]	RU 27 [206: 231]	RU28 [232: 257]	
	RU 29 [260: 285]	RU 30 [286: 311]	RU 31 [314: 339]	RU 32 [340: 365]	RU 33 [367: 392]
	RU 34 [394: 419]	RU 35 [420: 445]	RU 36 [448: 473]	RU37 [474: 499]	
52-tone RU	RU 1 [−499: −448]	RU 2 [−445: −394]	RU 3 [−365: −314]	RU 4 [−311: −260]	
	RU 5 [−257: −206]	RU 6 [−203: −152]	RU 7 [−123: −72]	RU 8 [−69: −18]	
	RU 9 [18: 69]	RU 10 [72: 123]	RU 11 [152: 203]	RU 12 [206: 257]	
	RU 13 [260: 311]	RU 14 [314: 365]	RU 15 [394: 445]	RU 16 [448: 499]	
106-tone RU	RU 1 [−499: −394]	RU 2 [−365: −260]	RU 3 [−257: −152]	RU 4 [−123: −18]	
	RU 5 [18: 123]	RU 6 [152: 257]	RU 7 [260: 365]	RU 8 [394: 499]	
242-tone RU	RU 1 [−500: −259]	RU 2 [−258: −17]	RU 3 [17: 258]	RU 4 [259: 500]	

TABLE 1-continued

Table 1 illustrates data and pilot subcarrier indices for resource units (RUs) in an 80 MHz channel.

RU type	RU index and subcarrier range	
484-tone RU	RU 1 [−500: −17]	RU 2 [17: 500]
996-tone RU	RU 1 [−500: −3, 3: 500]	

[0099] In some embodiments, there are four physical 20 MHz subchannels of the 80 MHz of Table 1 and 2. The four physical 20 MHz subchannels may be from subcarrier index −257 through −512 (e.g., CH1), −1 through −256 (e.g., CH2), 0 through 255 (e.g., CH3), and 256 through 511 (e.g., CH4). There are several RUs that straddle across two physical 20 MHz subchannels. For example, the RUs that straddle two physical 20 MHz subchannels are R10 [−257:−232] of 26-tone RUs with −257 in CH1 and −232 in CH2. R19 [−16:−4, 4:16] of 26-tone RUs with −16 in CH2 and 16 in CH3. R28 [232:257] of 26-tone RUs with 232 in CH3 and 257 in CH4. RU5 [−257:−206] of 52-tone RUs with −257 in CH1 and −206 in CH2. RU12 [206:257] of 52-tone RUs with 206 in CH3 and 257 in CH4. RU3 [−257:−152] of 106-tone RUs with −257 in CH1 and 152 in CH2. RU6 [152:257] of 106-tone RUs with 152 in CH3 and 257 in CH4. RU2[−258:−17] of 242-tone RUs with −258 in CH1 and −17 in CH2. RU3[17:258] of 242-tone RUs with 17 in CH3 and 258 in CH4. In some embodiments, RUs that straddle across two physical 20 MHz subchannels are termed ill-conditioned RUs. In some embodiments, the stations 504 transmit a PPDU, e.g., a HE TB PPDU on the RU, and when the RU is ill-conditioned, the legacy preamble portion of the HE TB PPDU is transmitted on both the 20 MHz physical channels that the ill-conditioned RU straddles.

[0100] In some embodiments, stations **504** and/or AP **502** includes transceiver **702** circuitry that is configured to tune to different 20 MHz channels. The transceiver **702** circuitry may be tuned to frequencies for four 20 MHz channels that correspond to the subcarrier indices. In some embodiments, the transceiver **702** circuitry may be tuned to more than four 20 MHz channels.

[0101] A station **504** that is allocated an RU that is an ill-conditioned RU transmits a legacy preamble (or pre-HE preamble) on more than one 20 MHz channel. Additionally, the station **504** transmitting on an ill-conditioned RU may interfere with a neighboring overlapping BSS (OBSS), e.g., the primary 20 channel of the OBSS may be different than the BSS that the station **504** is associated with, but the ill-conditioned RU may straddle both the primary 20 MHz channel of the BSS the station **504** is associated with and the primary 20 MHz channel of the OBSS. In some embodiments, the guard band in IEEE 802.11ax is smaller than a guard band of IEEE 802.11ac.

[0102] Table 2 illustrates data and pilot subcarrier indices for RUs in an 80 MHz channel. IEEE 802.11EHT may be configured to operate in accordance with Table 2, e.g., station **504** and AP **502** may operate in accordance with Table 2. The RUs of Table 2 are rotated so as not to be ill-conditioned RUs, e.g., not to have subcarriers that are included in more than one physical 20 MHz channel. The RUs that are greater than 20 MHz channels may include two or more physical channels, e.g., RU1 and RU2 of 484-tone RUs (approximately 40 MHz), and RU1 of 996-tone RUs (approximately 80 MHz).

TABLE 2

Table 2 illustrates data and pilot subcarrier indices for RUs in an 80 MHz channel.

RU type	RU index and subcarrier range				
26-tone RU	RU 1 [−499: −474]	RU 2 [−473: −448]	RU 3 [−445: −420]	RU 4 [−419: −394]	RU 5 [−392: −367]
	RU 6 [−365: −340]	RU 7 [−339: −314]	RU 8 [−311: −286]	RU 9 [−285: −260]	
	RU 10 [−257: −232] +8	RU 11 [−231: −206] +8	RU 12 [−203: −178] +8	RU 13 [−177: −152] +8	RU 14 [−150: −125] +8
	RU 15 [−123: −98] +8	RU 16 [−97: −72] +8	RU 17 [−69: −44] +8	RU 18 [−43: −18] +8	~~RU 19 [−16: −4, 4: 16]~~
	RU 20 [18: 43] −8	RU 21 [44: 69] −8	RU 22 [72: 97] −8	RU 23 [98: 123] −8	RU 24 [125: 150] −8
	RU 25 [152: 177] −8	RU 26 [178: 203] −8	RU 27 [206: 231] −8	RU28 [232: 257] −8	
	RU 29 [260: 285]	RU 30 [286: 311]	RU 31 [314: 339]	RU 32 [340: 365]	RU 33 [367: 392]
	RU 34 [394: 419]	RU 35 [420: 445]	RU 36 [448: 473]	RU37 [474: 499]	
52-tone RU	RU 1 [−499: −448]	RU 2 [−445: −394]	RU 3 [−365: −314]	RU 4 [−311: −260]	

TABLE 2-continued

Table 2 illustrates data and pilot subcarrier indices for RUs in an 80 MHz channel.

RU type	RU index and subcarrier range			
	RU 5 [−257: −206] +8	RU 6 [−203: −152] +8	RU 7 [−123: −72] +8	RU 8 [−69: −18] +8
	RU 9 [18: 69] −8	RU 10 [72: 123] −8	RU 11 [152: 203] −8	RU 12 [206: 257] −8
	RU 13 [260: 311]	RU 14 [314: 365]	RU 15 [394: 445]	RU 16 [448: 499]
106-tone RU	RU 1 [−499: −394]	RU 2 [−365: −260]	RU 3 [−257: −152] +8	RU 4 [−123: −18] +8
	RU 5 [18: 123] −8	RU 6 [152: 257] −8	RU 7 [260: 365]	RU 8 [394: 499]
242-tone RU	RU 1 [−500: −259]	RU 2 [−258: −17] +8 = [−250: −9]	RU 3 [17: 258] −8 = [9: 250]	RU 4 [259: 500]
484-tone RU	RU 1 [−500: −17]		RU 2 [17: 500]	
996-tone RU	RU 1 [−500: −3, 3: 500]			

[0103] Table 2 illustrates a shifting of the RUs by 8 and some RUs being canceled. The shifting may be by another number, N, other than 8 and −8 that avoids having RUs straddle two physical subchannels. The RUs that straddled two physical 20 MHz subchannels in Table 1 now either no longer straddle two physical 20 MHz channels or they are canceled. R10 [−257:−232]+8 of 26-tone RUs with −249 in CH2 and −224 in CH2. The other RUs are similarly within one physical 20 channel by the shifting by 8 subcarriers and the canceling of the center RU, RU19. In some embodiments, the guard band is maintained as the same size in Table 2 as Table 1. In some embodiments, there are guard tones in Table 2 for some RUs that are at the edge of a 20 MHz physical channel, e.g., RU10 [−249:−224] is 6 tones away from the neighboring physical 20 MHz channel, e.g., RU10 is all within CH2 and 6 tones away from CH1. A distributed RU is created by adding [−8:−4}, [4:8], [−258:−251], and [251:258] to form a 26-tone RU (e.g., a new RU 19) that is distributed.

[0104] In some embodiments, contiguous subcarriers (e.g., RU1 of the 52-tone RUs) allocations work better when the transmitter has reliable channel quality information (CQI) from the receiver. A distributed-tone allocations (e.g., new RU 19) work better when the transmitter does not have reliable CQI from the receiver, in accordance with some embodiments.

[0105] FIG. **8** illustrates distributed resource units (RUs) and contiguous RUs **800**, in accordance with some embodiments. Illustrated in FIG. **8** is 12 guard **802** subcarriers, null subcarriers **804**, center 26 RU **806**, null subcarriers **808**, **11** guard **810** subcarriers, 52-tone RUs **812**, **106**-tone RUs **814**, **242** RUs **816**, distributed 52-tone RUs **820**, **826**, distributed **106**-tone RUs **822**, **828**, and distributed 242-tone RUs **824**, **830**. The null subcarriers **804**, **808** may be between RUs and not used for transmission. The 12 guard **802** subcarriers and 11 guard **810** subcarriers provide a guard between channels that are adjacent to the 80 MHz channel that is illustrated.

[0106] The 52-tone RUs **812** are contiguous 52-tone RUs that may include 26-tone RUs with the center 26 RU **806** in the center. The 106-tone RUs **814** are contiguous RUs that may include 26-tone RUs with the center 26 RU **806** in the center. The 242-tone RUs **816** are contiguous RUs with the center 26 RU **806** in the center. The 242-tone RUs **816** comprises **242 816.1**, **816.2**, **816.3**, and **816.4**.

[0107] As illustrated, the 52-tone RUs **818**, 106-tone RUs **814**, and 242-tone RUs **816** are replaced for those portions that fall within 242-tone **816.2** and 242-tone **816.4** with the distributed 52-tone RUs **820**, **826**, distributed 106-tone RUs **822**, **828**, and distributed 242-tone RUs **824**, **830**.

[0108] As illustrated, two 20 MHz channels are contiguous RUs (**816.1** and **816.3**) and two 20 MHz channels are distributed RUs (**816.2** and **816.4**). Distributed 52-tone RUs **820**, **826** are distributed with 13 subcarriers over four locations indicated by four repetitions of 52 D**1**, 52 D**2**, . . . , 52 D**8**. Distributed 106-tone RUs **822**, **828** are distributed with 26 or 27 subcarriers over four locations indicated by four repetitions of 106 D**1**, 106 D**2**, . . . , 106 D**9**. Distributed 242-tone RUs **824**, **830** are distributed with 60 or 61 subcarriers over four locations indicated by four repetitions of 242 D**1** and 242 D**2**. In some embodiments, the distributed RUs may be distributed differently, e.g., the distribution may be localized to one 20 MHz subchannel (e.g., 242 RU **816**), two 20 MHz (as illustrated 242 RU **816.2**, **816.4**), three 20 MHz subchannels (e.g., **242** RU **816.1**, **816.3**, **816.4**), or four 242 20 MHz subchannels. In some embodiments, the ordering of the distributed RUs may be different, e.g., rather than 106 D**1**, . . . , 106 D**9** being repeated four times, the order may of 106 D**1**, . . . , 106 D**9** may be a different. The distributed RUs are distributed across the frequency so that they provide greater frequency diversity gain, in accordance with some embodiments.

[0109] FIG. **9** illustrates distributed RUs and contiguous RUs **900**, in accordance with some embodiments. Illustrated in FIG. **9** is 12 guard **902** subcarriers, null subcarriers **904**, center 26 RU **906**, null subcarriers **908**, 11 guard **910** subcarriers, 52-tone RUs **912**, 106-tone RUs **914**, distributed 52-tone RUs **920**, **926**, distributed 106-tone RUs **922**, **928**, and distributed 242-tone RUs **924**, **930**. The null subcarriers **904**, **908** may be between RUs and not used for transmission. The 12 guard **902** subcarriers and 11 guard **910**

subcarriers provide a guard between channels that are adjacent to the 80 MHz channel that is illustrated.

[0110] The 52-tone RUs **912** are contiguous 52-tone RUs that may include 26-tone RUs with the center 26 RU **906** in the center. The 106-tone RUs **914** are contiguous RUs that may include 26-tone RUs with the center 26 RU **906** in the center. The 106-tone RUs **914** comprise 106-tone RUs **914.1**, **914.2**, **914.3**, **914.4**, **914.5**, **914.6**, **914.7**, **914.8**.

[0111] As illustrated, the 52-tone RUs **918** and 106-tone RUs **914** are replaced for those portions that fall within 106-tone **914.2**, **914.4**, **914.6**, **914.8** with the distributed 52-tone RUs **920**, **926**, distributed 106-tone RUs **922**, **928**, and distributed 242-tone RUs **924**, **930**.

[0112] Distributed 52-tone RUs **920**, **926** may be the same or similar as distributed 52-tone RUs **820**, **826** as disclosed in FIG. **8**. Distributed 106-tone RUs **922**, **928** are the same or similar as distributed 106-tone RUs **822**, **828** as disclosed in conjunction with FIG. **8**. Distributed 242-tone RUs **924**, **930** are the same or similar as distributed 242-tone RUs **824**, **830** as disclosed in conjunction with FIG. **8**.

[0113] FIG. **10** illustrates a low-rate preamble **1000**, in accordance with some embodiments. FIG. **11** illustrates a low-rate preamble **1100**, in accordance with some embodiments. FIGS. **10** and **11** are disclosed in conjunction with one another. In some embodiments, station **504** and/or AP **502** are configured to transmit and/or receive low rate preamble **1000**. In some embodiments, station **504** and/or AP **502** are configured to transmit and/or receive low-rate preamble **1000** on a 6 GHz band. In some embodiments, station **504** and/or AP **502** are configured to transmit a PPDU on one of the distributed RUs and contiguous RUs **800**, **900** disclosed in FIGS. **8** and **9**. In some embodiments, station **504** and/or AP **502** are configured to transmit a PPDU comprising the low-rate preamble **1000**, **1100** (FIG. **11**) on one of the distributed RUs and contiguous RUs **800**, **900** disclosed in FIGS. **8** and **9**. In some embodiments, low-rate preamble **1000**, **1100** is a preamble to a PPDU that is a control frame.

[0114] Illustrated in FIGS. **10** and **11** are legacy preamble **1002**, **1102**, primary 20 MHz channel (P**20**), secondary 20 MHz channel (S**20**) **1006**, secondary 40 MHz channel (S40) **1008**, legacy short training field (L-STF) **1010**, legacy long-training field (L-LTF) **1012**, legacy signal field (L-SIG) **1014**, EHT short signal field (EHT S-SIG) **1018**, guard band **1020**, data **1022**, packet extension field (PE) **1024**, and binary phase shift-keying (BPSK) or quadrature binary phase shift-keying (QBPSK) **1026**.

[0115] In some embodiments, there may be fewer or a greater number of channels (e.g., **1004**, **1006**, **1008**). For example, there may be a secondary 80 MHz channel. In some embodiments, the low-rate preamble **1000** for a PPDU is transmitted on different channels (e.g., **1004**, **1006**, **1008**), e.g., on the P**20** **1004** only, P**20** **1004**, S**20** **1006** only, S**40** **1008** only, a lower 20 MHz of the S**40** **1008**, etc. Legacy preamble **1002** comprises L-STF **1010**, L-LTF **1012**, and L-SIG **1014**.

[0116] The L-STF **1010** and L-LTF **1012** are training signals that may be the same or similar as legacy signals, e.g., as disclosed in IEEE 802.11. L-SIG **1014** is decoded by the receiver to determine decoding parameters. L-SIG **1014** includes a rate subfield and length subfield that may be used by stations **504**, APs **502**, and/or legacy devices **506** to determine a duration that may be used for a deferral duration or to decode a legacy PPDU (e.g., an IEEE 802.11a/b/j/p/g/n/ac/ah/ad/ax PPDU).

[0117] EHT S-SIG **1018** includes one or more of a bandwidth subfield **1050**, MCS subfield **1052**, and a packet type subfield **1054**. EHT S-SIG **1018** may include other information such as a BSS color subfield, a spatial reuse subfield, an uplink/downlink (UL/DL) subfield **1060**, and other information needed to (and/or determine whether to) decode the data **1022**. The bandwidth field **1050** indicates a bandwidth of the PPDU with the low-rate preamble **1000**, **1100**, and the bandwidth of the data **1022**. The MCS field **1052** indicates a modulation and coding scheme used to encode the data **1022**. The packet type **1054** indicates a packet type, e.g., the low-rate PPDU. The station **504** and/or AP **502** may be configured to decode different types of packets and the preambles illustrated in FIGS. **10** and **11** may only be one type of EHT preamble. EHT S-SIG **1018** may include one or more additional fields that include other information. In some embodiments, EHT S-SIG **1018** enables the data **1022** to be transmitted over a larger bandwidth than a legacy PPDU. In some embodiments, the data rate realized by the data **1022** is greater than in a legacy PPDU. Station **504** and/or AP **502** may switch physical characteristics after decoding EHT S-SIG **1018**, e.g., the subcarrier spacing and duration may change. Station **504** and/or AP **502** decode the EHT S-SIG **1018** and use the information decoded to decode the data **1022**, in accordance with some embodiments.

[0118] In some embodiments, low-rate preamble **1000**, **1100**, defers non-EHT stations and AP, e.g., legacy stations **506**. The deferral (e.g., setting of a NAV) is achieved by the legacy devices decoding the L-SIG **1014** and determining a duration. The legacy devices can then not decode the EHT S-SIG **1018** as the format is not known to the legacy devices. The legacy devices then defer for the remainder of the duration determined by the L-SIG **1014**, in accordance with some embodiments.

[0119] In some embodiments, a legacy device **506** may encode a data field after the L-SIG **1014** that a station **504** and/or AP **502** that are configured to operate in accordance with EHT may interpret as a EHT S-SIG **1018**. In some embodiments, the station **504** and/or AP **502** are configured to transmit EHT S-SIG **1018** in accordance with BPSK. In some embodiments, station **504** and/or AP **502** are configured to transmit EHT S-SIG **1018** in accordance with QBPSK. In some embodiments, when station **504** and/or AP **502** transmit EHT S-SIG **1018** in accordance with QBPSK, then the station **504** and/or AP **502** will not confuse a data field of a legacy transmission as the EHT S-SIG **1018** since the data field of the legacy transmission is transmitted in accordance with QBPSK.

[0120] The low-rate preambles **1000**, **1100** are backward compatible with legacy preambles based on the transmission of the L-STF **1010**, **1110**, L-LTF **1012**, **1112**, and L-SIG **1014**, **114** on each 20 MHz channel occupied by the low-rate preamble **1000**, **1100**, in accordance with some embodiments. Legacy device **506** will defer based on a duration in the L-SIG. In some embodiments, EHT S-SIG **1018** requires 4 us to transmit. In some embodiments, EHT may be termed "be", "next generation", or another term. In some embodiments, a legacy device **506** (e.g., IEEE 802.11n) may decode the EHT S-SIG **1018** as a field of a legacy PPDU and not respect the length or duration indicated in the L-SIG **1014** and interpret the EHT S-SIG **1018** as a legacy sig field.

[0121] In some embodiments, the station **504** and/or AP **502** are configured to transmit the L-SIG **1014** and EHT S-SIG **1018** without one or more of the guard band **1020** subcarriers so that the subcarriers can be trained for data **1022**. In some embodiments, station **504** and/or AP **502** are configured to transmit data **1022** with subcarriers (or tones) punctured where the guard band 1020 subcarriers are. Illustrated in FIG. **11** is legacy preamble **1102**, P**20** **1004**, S**20** **1006**, S**40** **1008**, L-STF **1010**, L-LTF **1012**, L-SIG **1014**, EHT S-SIG **1018**, guard band **1020**, data **1022**, PE **1024**, and BPSK or QBPSK **1026**.

[0122] In some embodiments, station **504** and/or AP **502** are configured to transmit RL-SIG **1015** after L-SIG **1014** as part of the legacy preamble **1102**. RL-SIG **1015** indicates to legacy devices **506** other than IEEE 802.11ax devices that the preamble is not intended for their protocol. The IEEE 802.11ax devices will then defer based on the EHT S-SIG **1018** since it is not in the format of an IEEE 802.11ax signal field (e.g., RE-SIG-A**1**) that succeeds the RL-SIG **1015**. The RL-SIG **1015** may require 4 us to transmit. Station **504** and AP **502** may be able to reuse the detection state machine of a IEEE 802.11ax device and then detect the symbol after the RL-SIG **1015** to differentiate EHT low rate PPDU from IEEE 802.11ax or another protocol. In some embodiments, the probability that a IEEE 802.11a PPDU will be misinterpreted as a EHT PPDU is reduced as the RL-SIG **1015** structure is more complex than the structure of the EHT S-SIG **1018**.

[0123] The station **504** and/or AP **502** may be configured to transmit the EHT S-SIG **1018** in BPSK **1026** and/or QBPSK **1026** after the RL-SIG **1015**. The RL-SIG **1015** may be transmitted on each subchannel the L-SIG **1014** is transmitted on. The station **504** and/or AP **502** may be termed BE station **504**, EHT station **504**, BE AP **502**, EHT AP **502**, or another term. RL-SIG **1015** may include the same fields as the L-SIG **1014** with the same values indicated, but the RL-SIG **1015** may be transmitted with fewer muted subcarriers, e.g., edge subcarriers may be transmitted with the RL-SIG **1015** but not with the L-SIG **1014**.

[0124] FIG. **12** illustrates a method **1200** for tone plans and preambles for extremely high throughput (EHT), in accordance with some embodiments. The method **1200** begins at operation **1202** with encoding a PPDU, the PPDU including a EHT preamble, the EHT preamble including a legacy preamble portion and a EHT preamble portion, the legacy preamble comprising a L-SFT, a L-LTF, and a L-SIG, the EHT preamble portion including an EHT S-SIG, the EHT S-SIG including a MCS subfield, the MCS subfield indicating a MCS of a subsequent data portion. For example, a station **504** and/or AP **502** decodes a PPDU where the preamble to the PPDU is in accordance to a low-rate preamble **1000**, **1100**.

[0125] The method **1200** continues at operation **1204** with encoding the PPDU to comprise the subsequent data portion in accordance with the MCS. For example, station **504** and/or AP **502** may encode the data **1022** in accordance with the MCS **1052** indicated in the EHT S-SIG **1018**.

[0126] The method **1200** continues at operation **1206** with configuring the EHT AP or the EHT STA to transmit the PPDU. For example, an apparatus of station **504** and/or AP **502** may configure the station **504** and/or AP **502** to transmit a PPDU in accordance with the fields of the EHT S-SIG **1018**.

[0127] Method **1200** may include one or more additional operations. One or more of the operations may be optional. The operations **1200** may be performed in a different order.

[0128] The Abstract is provided to comply with 37 C.F.R. Section 1.72(b) requiring an abstract that will allow the reader to ascertain the nature and gist of the technical disclosure. It is submitted with the understanding that it will not be used to limit or interpret the scope or meaning of the claims. The following claims are hereby incorporated into the detailed description, with each claim standing on its own as a separate embodiment.

What is claimed is:

1. An apparatus of an extremely high-throughput (EHT) access point (AP) or EHT station (STA), the apparatus comprising memory; and processing circuitry coupled to the memory, the processing circuitry configured to:

encode a physical layer (PHY) protocol data unit (PPDU), the PPDU comprising a EHT preamble, the EHT preamble to comprise a legacy preamble portion and a EHT preamble portion, the legacy preamble comprising a legacy short training field (L-SFT), a legacy long-training field (L-LTF), and a legacy signal field (L-SIG), the EHT preamble portion comprising an EHT short signal field (EHT S-SIG), the EHT S-SIG comprising an modulation and coding scheme (MCS) subfield, the MCS subfield indicating a MCS of a subsequent data portion;

encode the PPDU to comprise the subsequent data portion in accordance with the MCS; and

configure the EHT AP or the EHT STA to transmit the PPDU.

2. The apparatus of claim **1**, wherein the processing circuitry is further configured to:

encode the legacy preamble to further comprise a repeat of the L-SIG (RL-SIG) after the L-SIG.

3. The apparatus of claim **1**, wherein the processing circuitry is further configured to:

encode the EHT S-SIG to be transmitted in accordance with Quadrature Binary Phase Shift Keying (QBPSK); and

configure the EHT AP or the EHT STA to transmit the PPDU with the EHT S-SIG transmitted in accordance with QBPSK.

4. The apparatus of claim **1**, wherein the processing circuitry is further configured to:

encode the EHT S-SIG to be transmitted in accordance with Binary Phase Shift Keying (BPSK); and

configure the EHT AP or the EHT STA to transmit the PPDU with the EHT S-SIG transmitted in accordance with BPSK.

5. The apparatus of claim **1**, wherein the EHT S-SIG further comprises a bandwidth field, the bandwidth field indicating a bandwidth of the PPDU, and wherein the processing circuitry is further configured to:

encode the EHT preamble to repeat for each 20 MHz subchannel within the bandwidth of the PPDU; and

encode the subsequent data portion in accordance with the MCS and to span the bandwidth of the PPDU.

6. The apparatus of claim **1**, wherein the EHT S-SIG further comprises a bandwidth field, the bandwidth field indicating a bandwidth of the PPDU, and wherein the processing circuitry is further configured to:

encode the EHT preamble to repeat for each 20 MHz subchannel within the bandwidth of the PPDU; and

encode the subsequent data portion in accordance with the MCS and to span the bandwidth of the PPDU with punctured tones corresponding to guard band tones to be used in transmitting the EHT preamble.

7. The apparatus of claim **1**, wherein the PPDU is a low rate mode preamble, and the processing circuitry is further configured to:

configure the EHT AP or the EHT STA to transmit the PPDU within one or more subchannels within a 6 GHz band.

8. The apparatus of claim **1**, wherein the EHT S-SIG further comprises a bandwidth field, the bandwidth field indicating a bandwidth of the PPDU, and wherein the processing circuitry is further configured to:

encode the EHT preamble to repeat for each 20 MHz subchannel within the bandwidth of the PPDU, wherein the EHT preamble portion and the legacy preamble are encoded to comprise signals within legacy guard bands, the legacy guard bands between 20 MHz subchannels and at both edges of the bandwidth; and

encode the subsequent data portion in accordance with the MCS and to span the bandwidth of the PPDU.

9. The apparatus of claim **1**, wherein the processing circuitry is further configured to:

decode a packet comprising a resource unit (RU) allocation for the EHT AP or EHT STA to transmit the PPDU, wherein the RU allocation comprises two or more portions of contiguous subcarriers, and wherein configure the EHT AP or the EHT STA to transmit the PPDU further comprises:

configure the EHT AP or the EHT STA to transmit the PPDU on the two or more portions of contiguous subcarriers.

10. The apparatus of claim **1**, wherein the processing circuitry is further configured to:

decode a packet comprising a resource unit (RU) allocation for the EHT AP or EHT STA to transmit the PPDU, wherein the RU allocation comprises a distributed RU allocation or a contiguous RU allocation, and wherein configure the EHT AP or the EHT STA to transmit the PPDU further comprises:

configure the EHT AP or the EHT STA to transmit the PPDU on the distributed RU allocation or the contiguous RU allocation, wherein the distributed RU allocation comprises two or more portions of contiguous subcarriers.

11. The apparatus of claim **1**, wherein the processing circuitry is further configured to:

decode a packet comprising a resource unit (RU) allocation for the EHT AP or EHT STA to transmit the PPDU, wherein the RU allocation refrains from including subcarriers from more than one 20 MHz physical subchannels, and wherein configure the EHT AP or the EHT STA to transmit the PPDU further comprises:

configure the EHT AP or the EHT STA to transmit the PPDU on the RU allocation.

12. The apparatus of claim **11**, wherein the 20 MHz physical subchannels are predetermined 20 MHz frequency ranges of a 2.4 GHz band, a 5 GHz band, or a 6 GHz band.

13. The apparatus of claim **1**, wherein the processing circuitry comprises a field-programmable gate array (FPGA).

14. The apparatus of claim **1**, further comprising transceiver circuitry coupled to the processing circuitry, the transceiver circuitry coupled to two or more patch antennas for receiving signaling in accordance with a multiple-input multiple-output (MIMO) technique.

15. The apparatus of claim **1**, wherein the AP and the station are configured to operate in accordance with one or more of the following communication standards: an Institute of Electrical and Electronic Engineers (IEEE) 802.11ax, an IEEE 802.11 extremely-high throughput (EHT), IEEE 802.11az, IEEE 802.1lay/ad, IEEE 802.11be, and IEEE 802.11.

16. A method performed by an apparatus of an extremely high-throughput (EHT) access point (AP) or EHT station (STA), the method comprising:

encoding a physical layer (PHY) protocol data unit (PPDU), the PPDU comprising a EHT preamble, the EHT preamble to comprise a legacy preamble portion and a EHT preamble portion, the legacy preamble comprising a legacy short training field (L-SFT), a legacy long-training field (L-LTF), and a legacy signal field (L-SIG), the EHT preamble portion comprising an EHT short signal field (EHT S-SIG), the EHT S-SIG comprising an modulation and coding scheme (MCS) subfield, the MCS subfield indicating a MCS of a subsequent data portion;

encoding the PPDU to comprise the subsequent data portion in accordance with the MCS; and

configuring the EHT AP or the EHT STA to transmit the PPDU.

17. The method of claim **16**, wherein the EHT S-SIG further comprises a bandwidth field, the bandwidth field indicating a bandwidth of the PPDU, and wherein the method further comprises:

encoding the EHT preamble to repeat for each 20 MHz subchannel within the bandwidth of the PPDU; and

encoding the subsequent data portion in accordance with the MCS and to span the bandwidth of the PPDU.

18. A non-transitory computer-readable storage medium that stores instructions for execution by one or more processors of an apparatus of an extremely high-throughput (EHT) access point (AP) or EHT station (STA), the instructions to configure the one or more processors to:

decode a physical layer (PHY) protocol data unit (PPDU), the PPDU comprising a EHT preamble, the EHT preamble to comprise a legacy preamble portion and a EHT preamble portion, the legacy preamble comprising a legacy short training field (L-SFT), a legacy long-training field (L-LTF), and a legacy signal field (L-SIG), the EHT preamble portion comprising an EHT short signal field (EHT S-SIG), the EHT S-SIG comprising an modulation and coding scheme (MCS) subfield, the MCS subfield indicating a MCS of a subsequent data portion; and

decode the subsequent data portion in accordance with the MCS.

19. The non-transitory computer-readable storage medium of claim **18**, the instructions to further configure the one or more processors to:

decode the EHT S-SIG in accordance with Quadrature Binary Phase Shift Keying (QBPSK); and

determine the PPDU is an EHT PPDU based on the EHT S-SIG being decoded in accordance with QBPSK.

20. The non-transitory computer-readable storage medium of claim **18**, wherein the instructions further configure the one or more processors to:

encode the legacy preamble to further comprise a repeat of the L-SIG (RL-SIG) after the L-SIG.

* * * * *