US 20200014509A1

(19) United States

(12) Patent Application Publication

Asterjadhi et al.

(10) Pub. No.: US 2020/0014509 A1

(43) Pub. Date: Jan. 9, 2020

(54) **RESOURCE UNIT SPREADING**

(71) Applicant: **QUALCOMM Incorporated**, San Diego, CA (US)

(72) Inventors: **Alfred Asterjadhi**, San Diego, CA (US); **Abhishek Pramod Patil**, San Diego, CA (US); **George Cherian**, San Diego, CA (US); **Lin Yang**, San Diego, CA (US); **Bin Tian**, San Diego, CA (US); **Sameer Vermani**, San Diego, CA (US); **Lochan Verma**, San Diego, CA (US)

(21) Appl. No.: **16/502,428**

(22) Filed: **Jul. 3, 2019**

Related U.S. Application Data

(60) Provisional application No. 62/694,928, filed on Jul. 6, 2018, provisional application No. 62/713,465, filed on Aug. 1, 2018.

Publication Classification

(51) **Int. Cl.**

H04L 5/00 (2006.01)

H04W 72/04 (2006.01)

(52) **U.S. Cl.**

CPC ***H04L 5/0041*** (2013.01); ***H04W 72/042*** (2013.01); ***H04L 5/0062*** (2013.01); ***H04L 5/0073*** (2013.01); ***H04W 72/0453*** (2013.01)

(57) **ABSTRACT**

This disclosure provides methods, devices, and systems for wireless communications. In some systems, an access point (AP) may assign a resource unit (RU) including a non-contiguous set of tones of a channel to a wireless node, such as a station (STA). The non-contiguous set of tones includes at least some tones that are non-contiguous in the frequency domain with all other tones of the set. The AP may generate an indicator for this RU and may transmit the indicator to the wireless node. The wireless node may receive the indicator, determine the non-contiguous set of tones for the indicated RU, and transmit data over the non-contiguous set of tones for the RU. The AP may receive the data via the RU (over the non-contiguous set of tones).

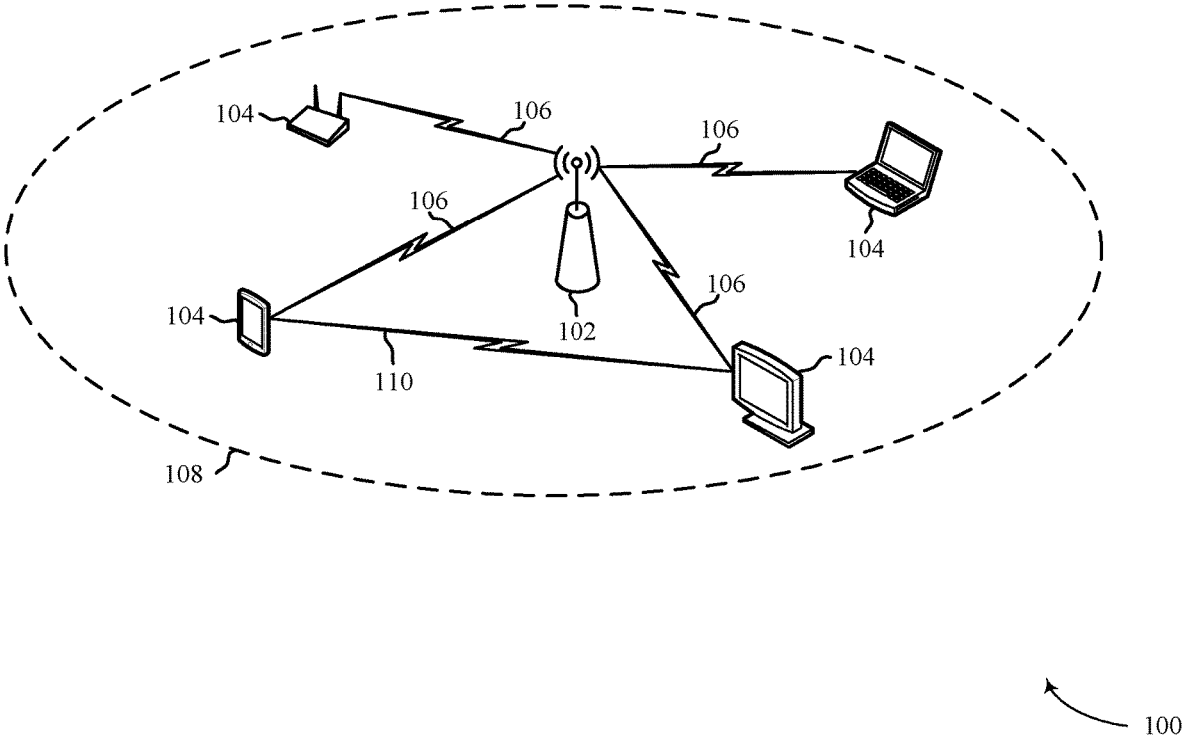

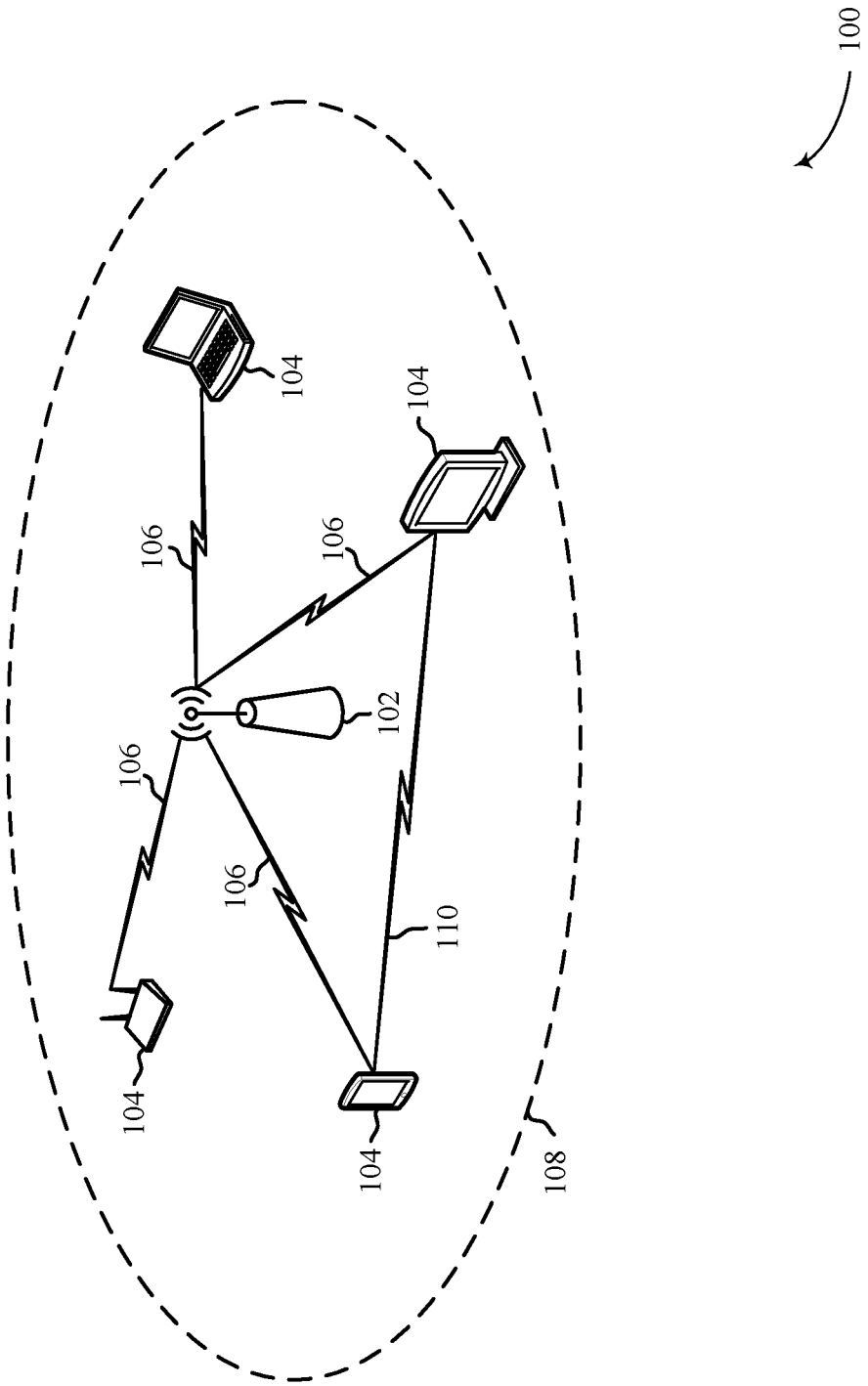

Figure 1

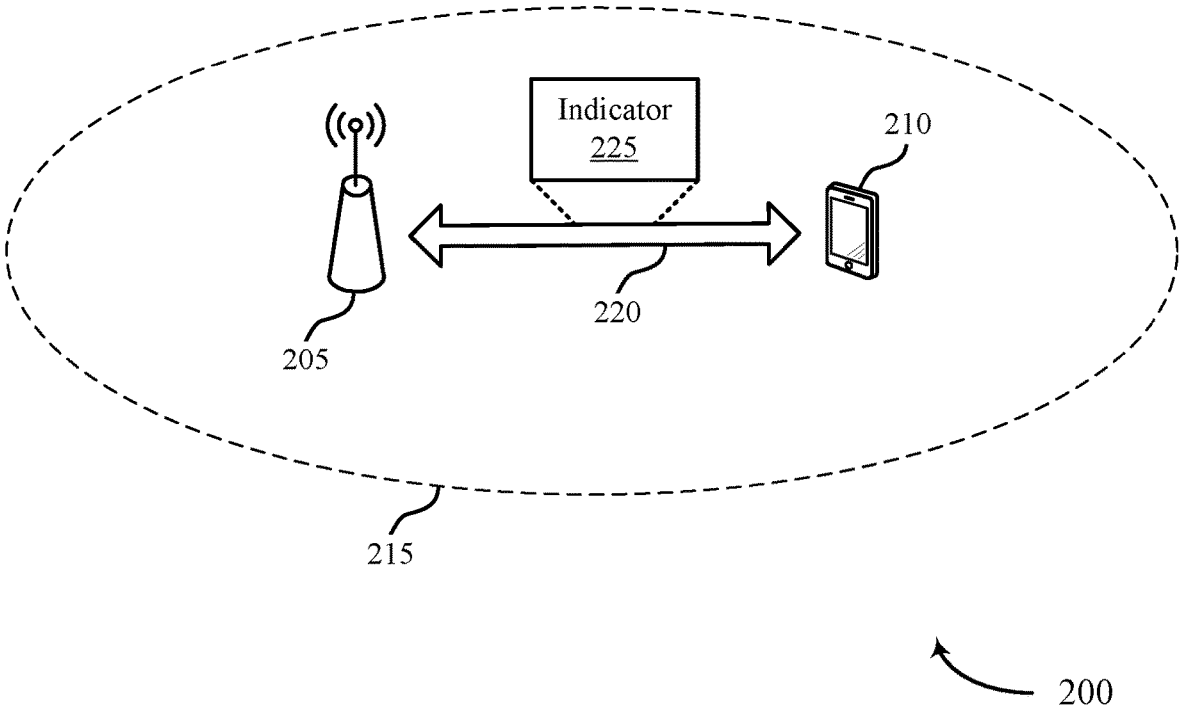

200

Figure 2

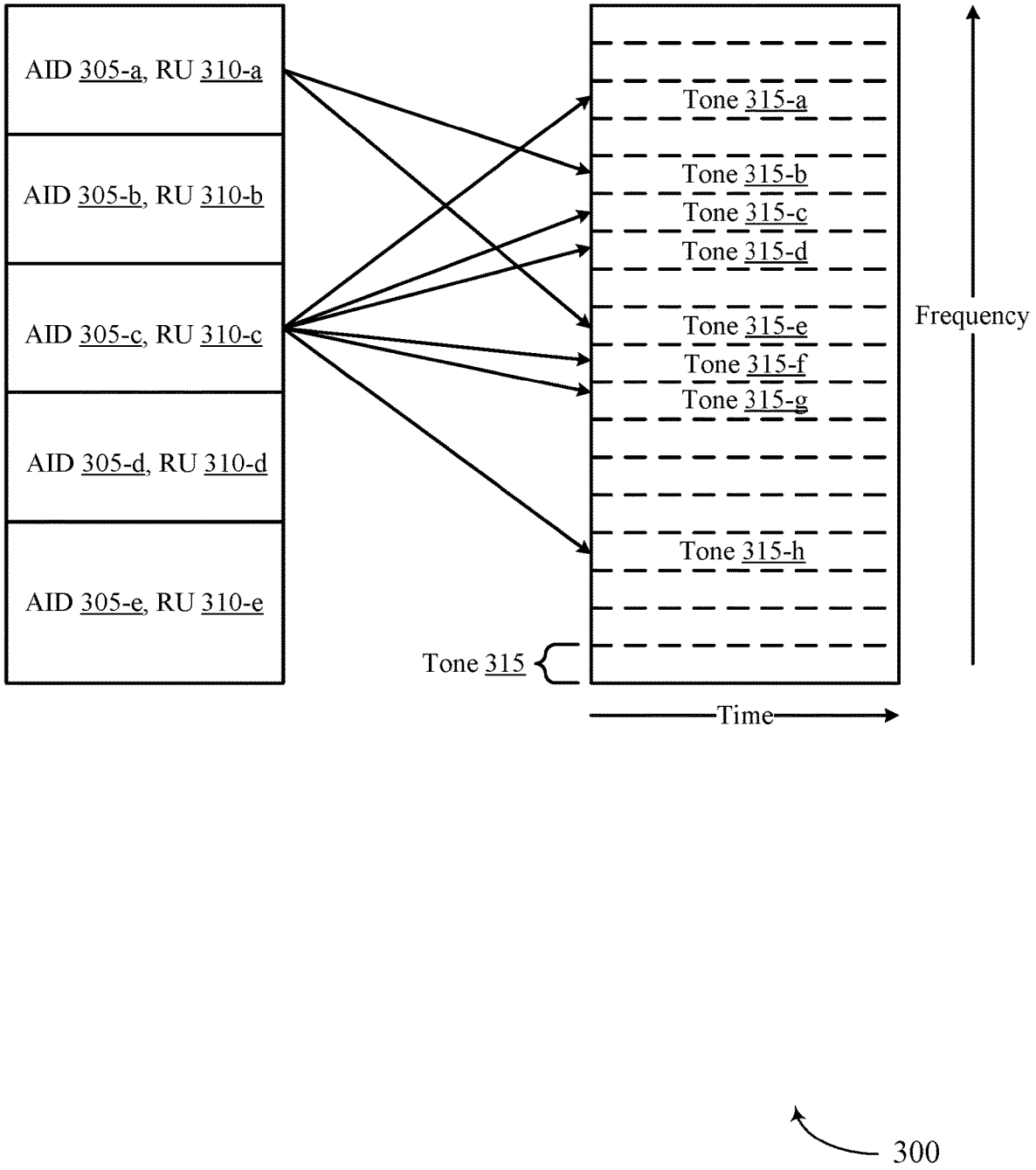
AID 305-a, RU 310-a
AID 305-b, RU 310-b
AID 305-c, RU 310-c
AID 305-d, RU 310-d
AID 305-e, RU 310-e
Tone 315-a
Tone 315-b
Tone 315-c
Tone 315-d
Tone 315-e
Tone 315-f
Tone 315-g
Tone 315-h
Tone 315
Frequency
Time
300

Figure 3

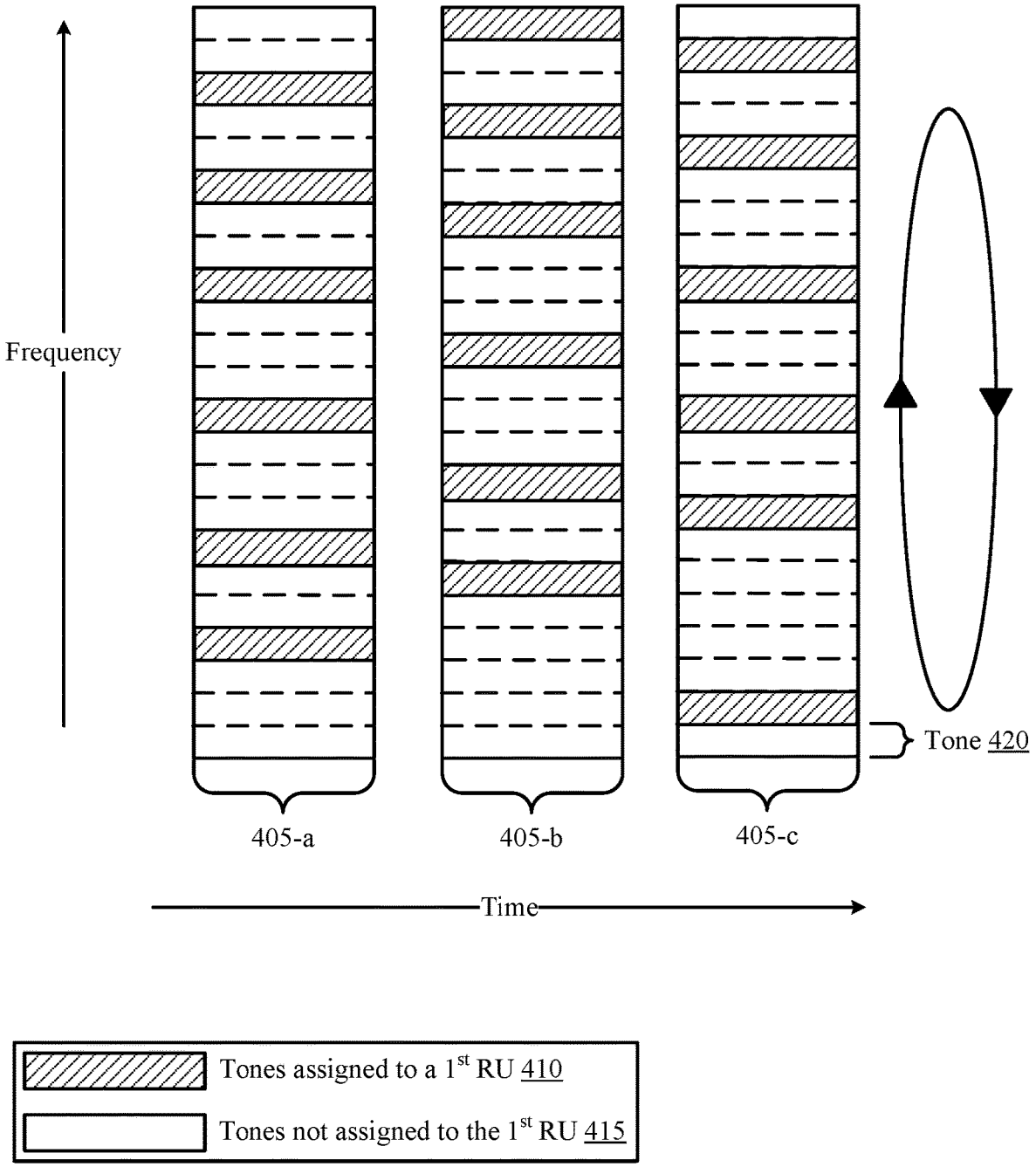
Frequency
Tone 420
405-a
405-b
405-c
Time
Tones assigned to a 1st RU 410
Tones not assigned to the 1st RU 415

400

Figure 4

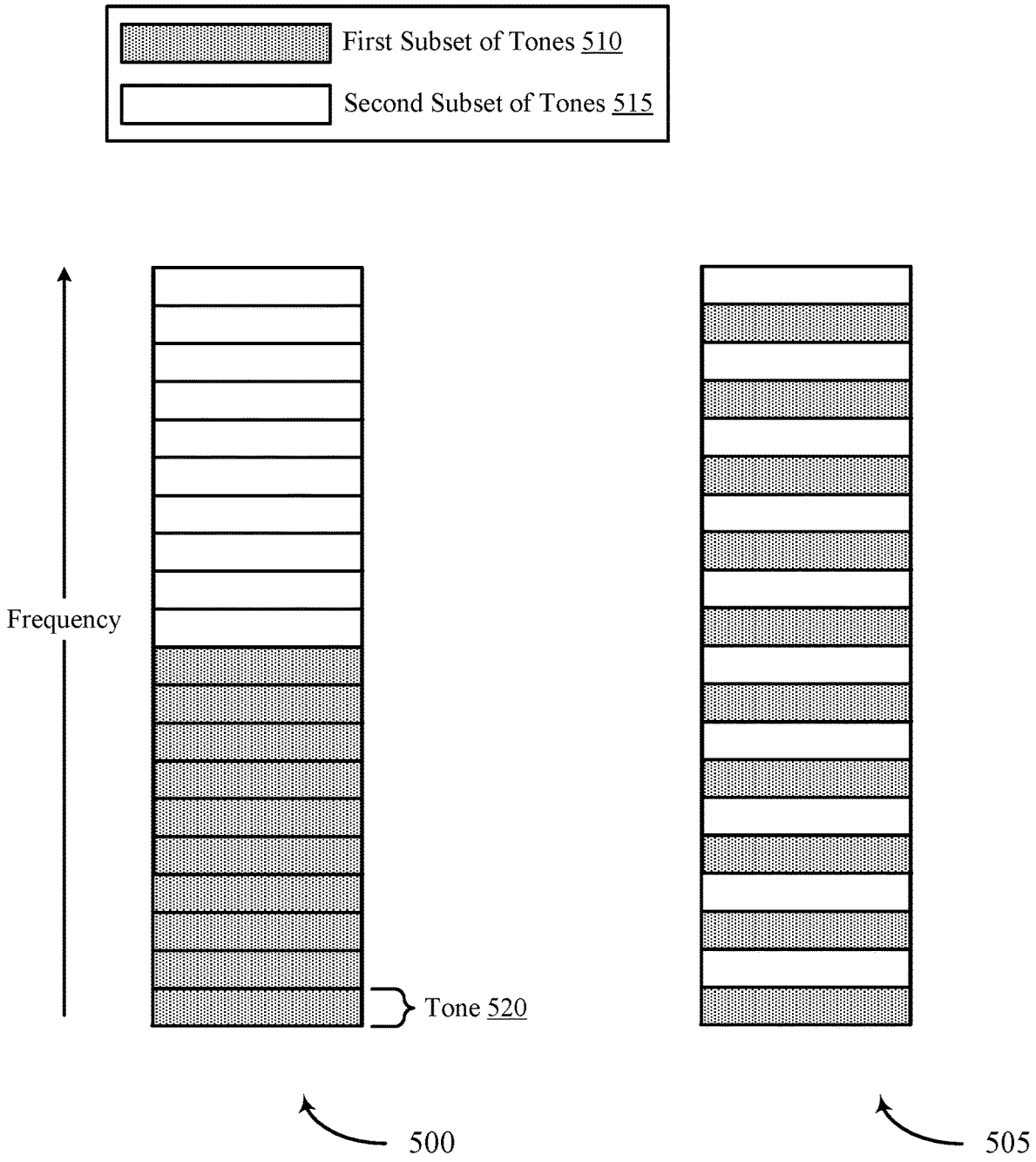

Figure 5A

Figure 5B

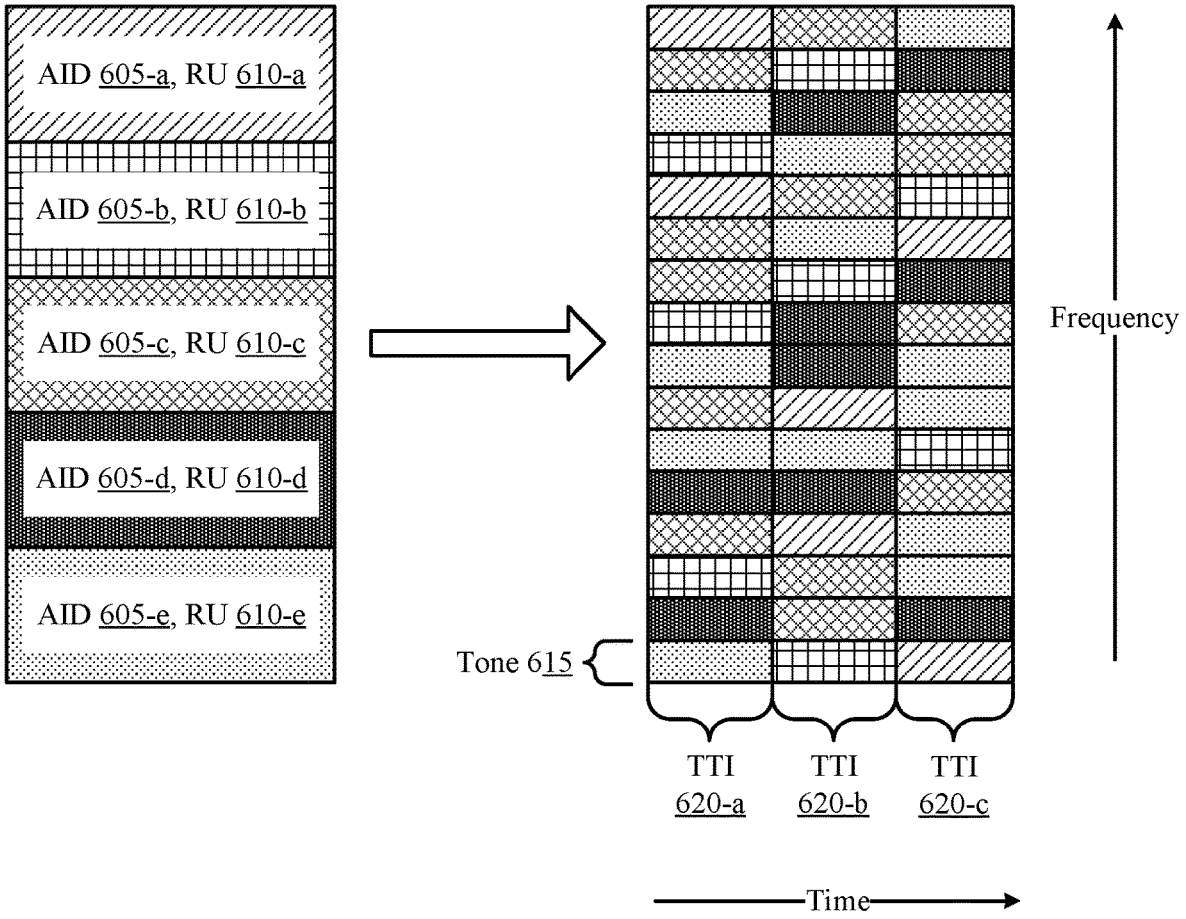
AID 605-a, RU 610-a
AID 605-b, RU 610-b
AID 605-c, RU 610-c
AID 605-d, RU 610-d
AID 605-e, RU 610-e
Tone 615
Frequency
TTI 620-a
TTI 620-b
TTI 620-c
Time

600

Figure 6

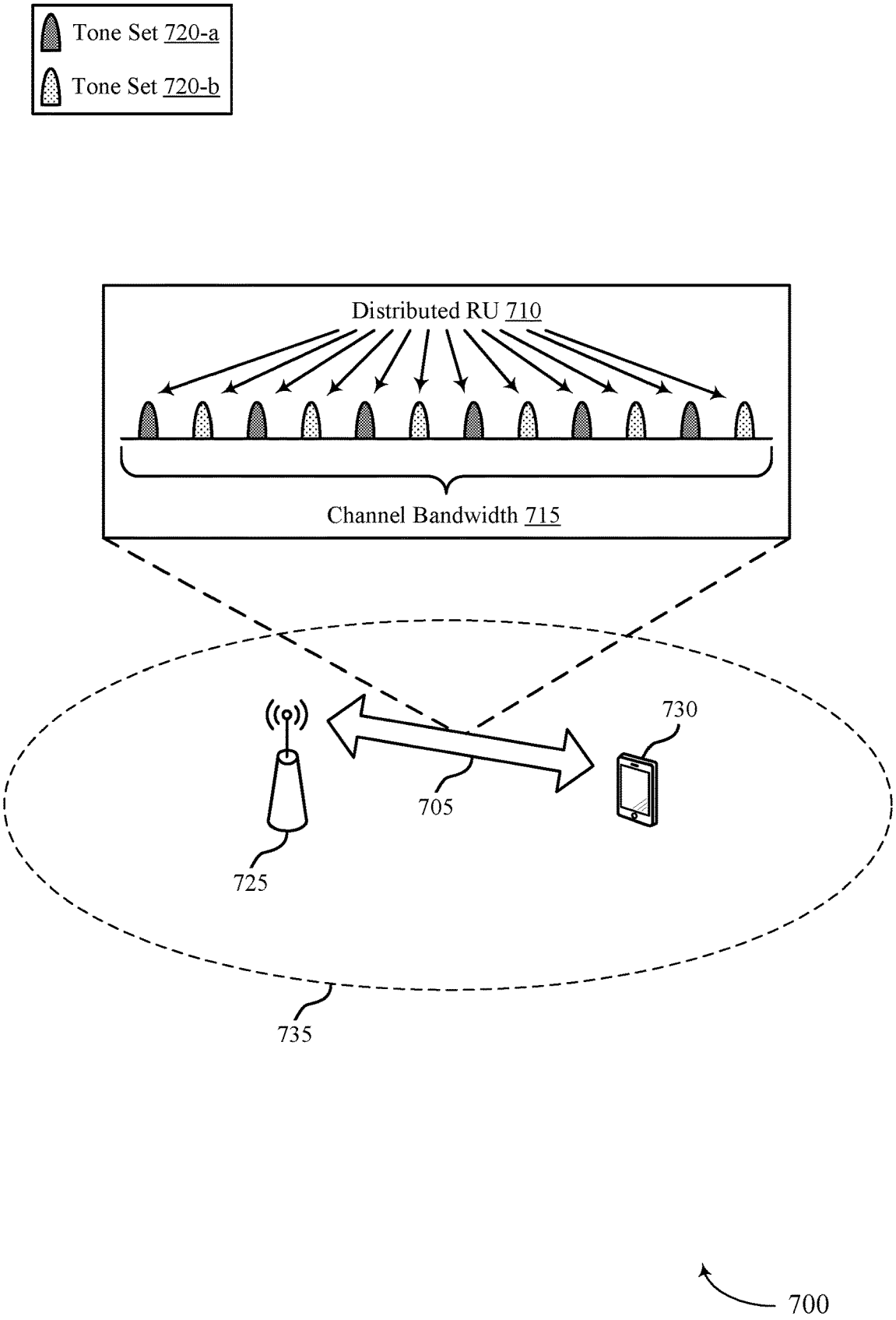
Tone Set 720-a
Tone Set 720-b
Distributed RU 710
Channel Bandwidth 715
730
705
725
735
700

Figure 7

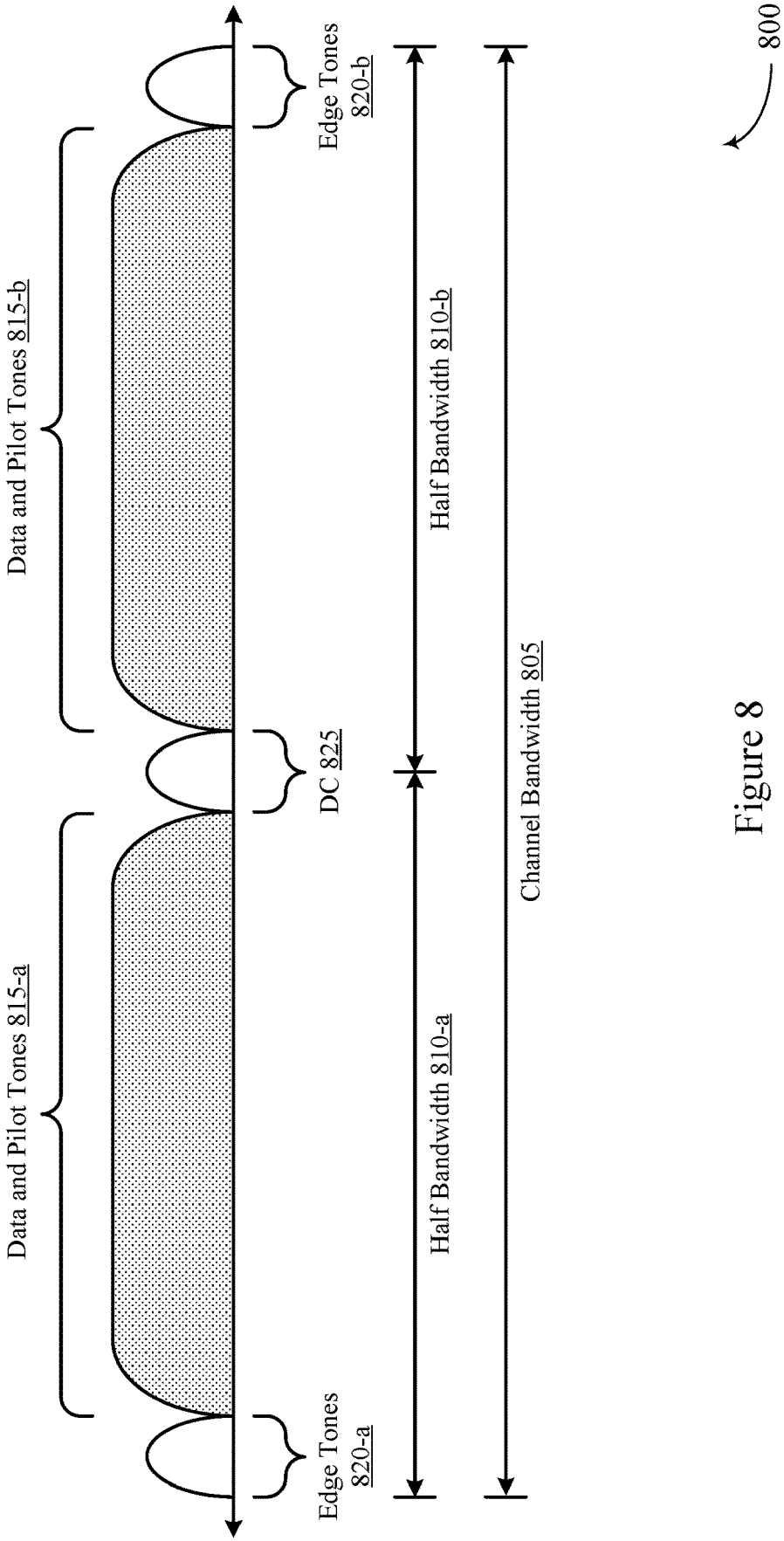
Data and Pilot Tones 815-a
Data and Pilot Tones 815-b
Edge Tones 820-a
DC 825
Edge Tones 820-b
Half Bandwidth 810-a
Half Bandwidth 810-b
Channel Bandwidth 805
800

Figure 8

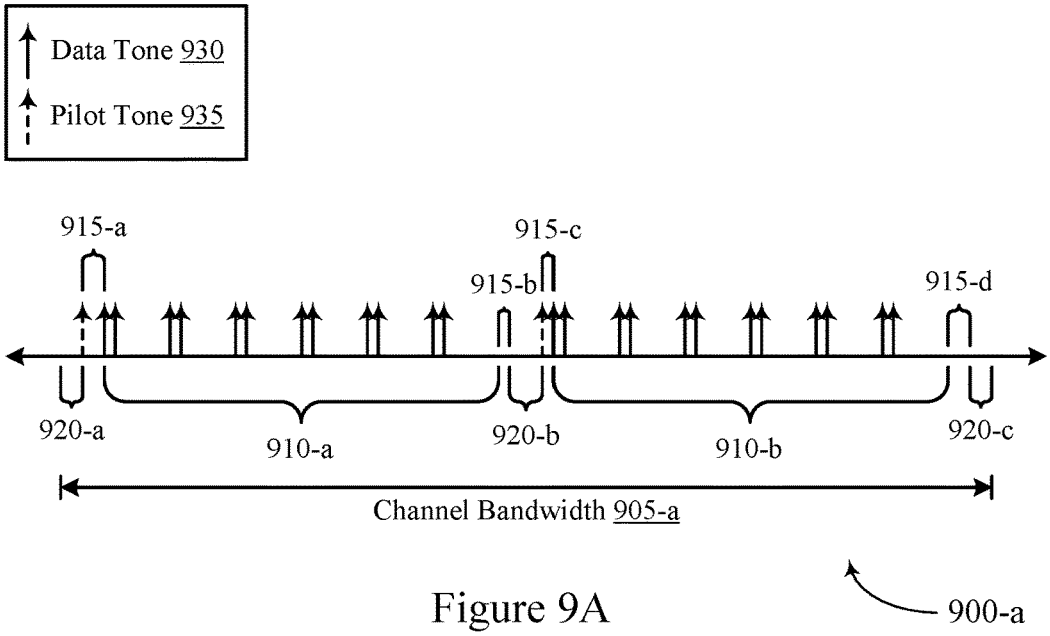

Figure 9A

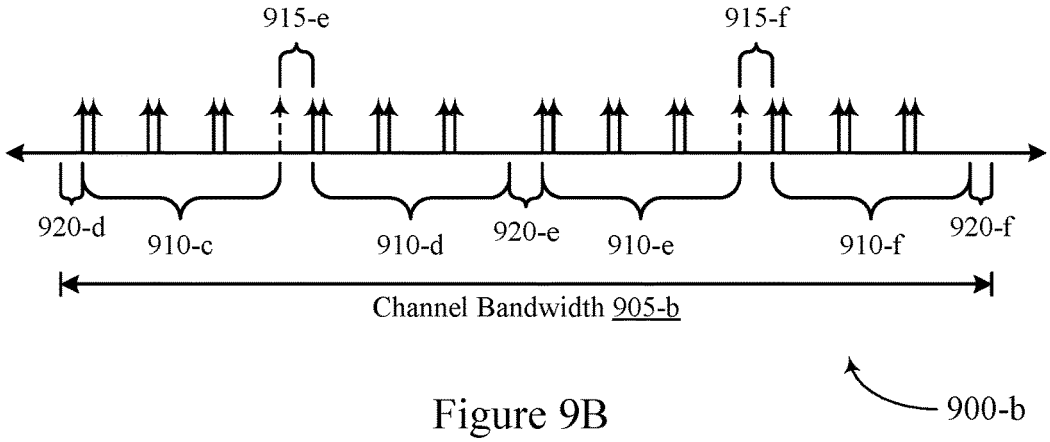

Figure 9B

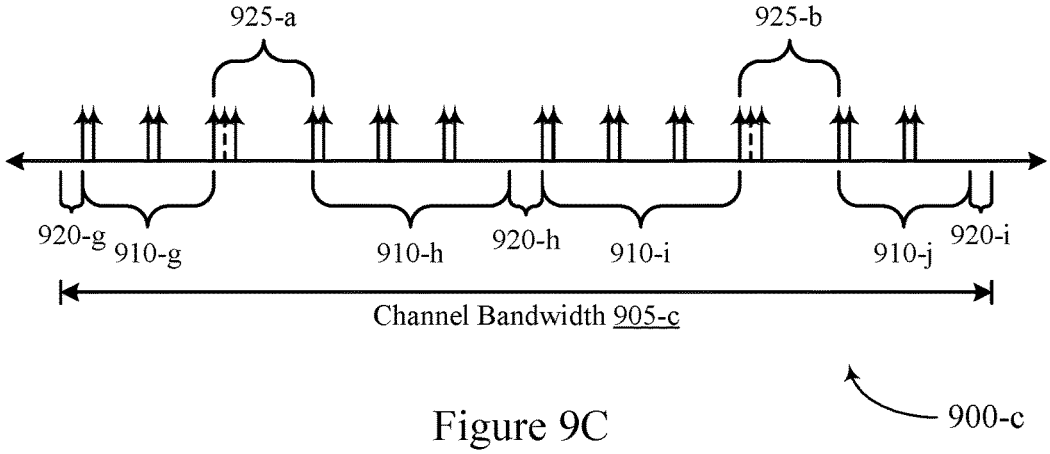

Figure 9C

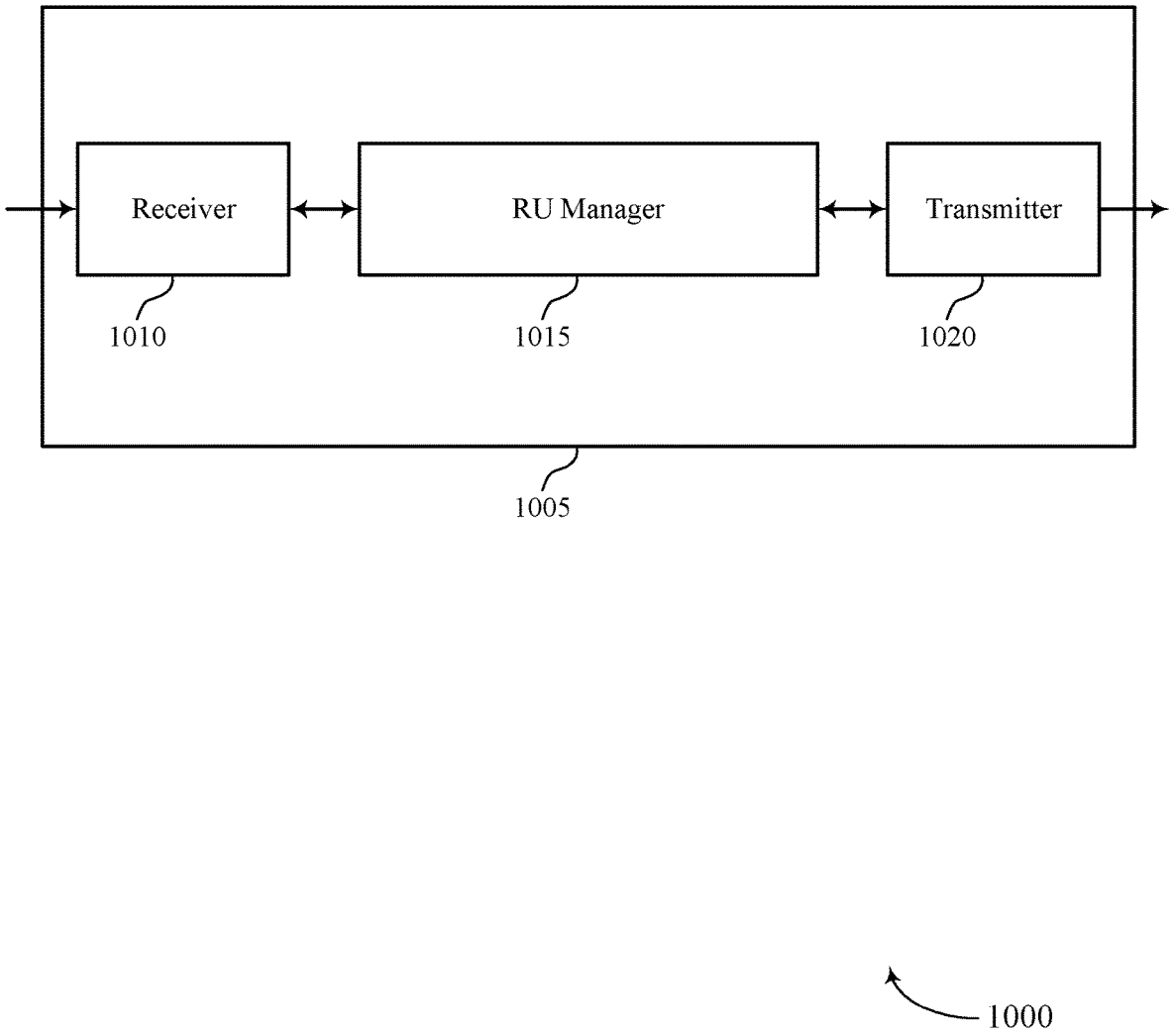

Figure 10

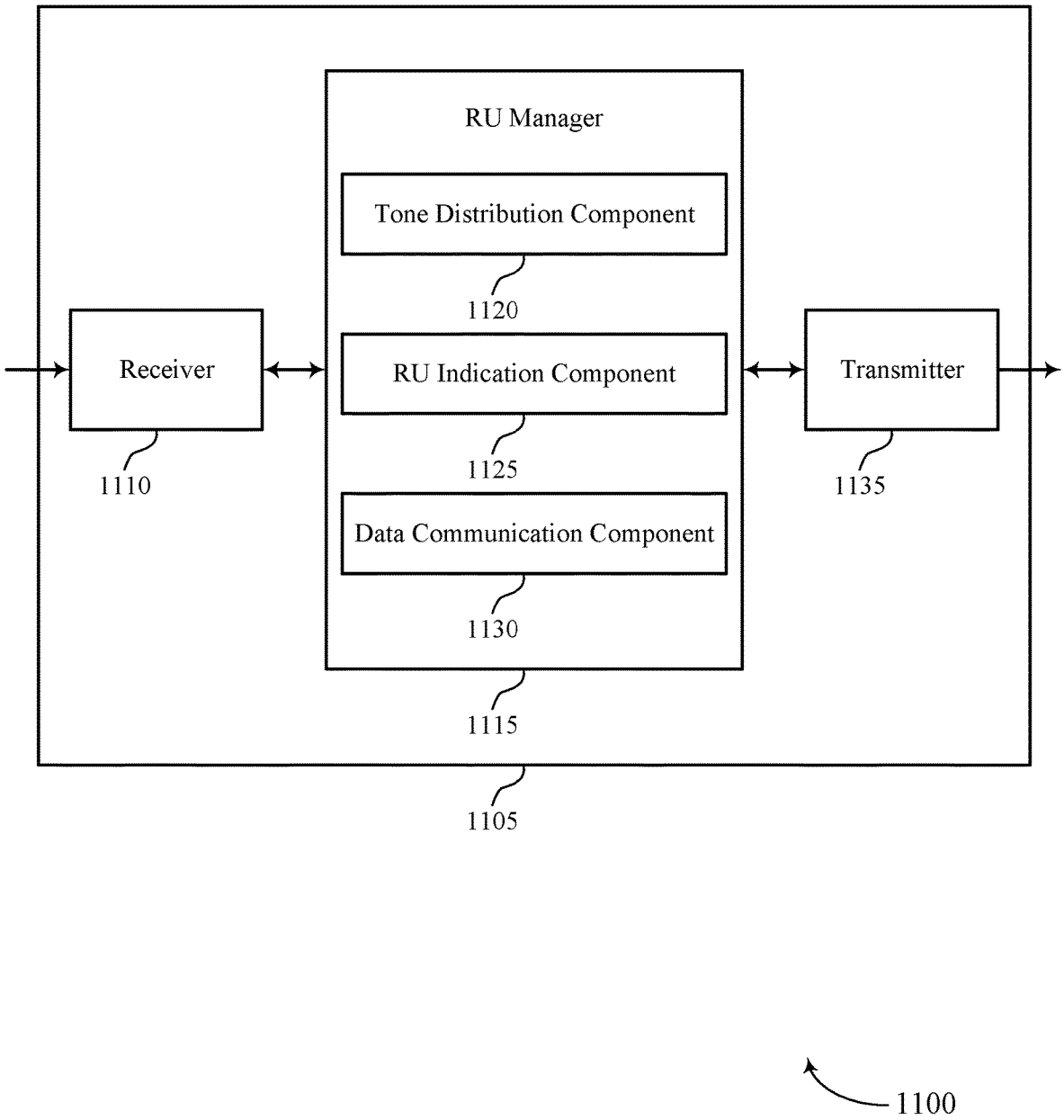
RU Manager
Tone Distribution Component
1120
Receiver
RU Indication Component
Transmitter
1110
1125
1135
Data Communication Component
1130
1115
1105
1100

Figure 11

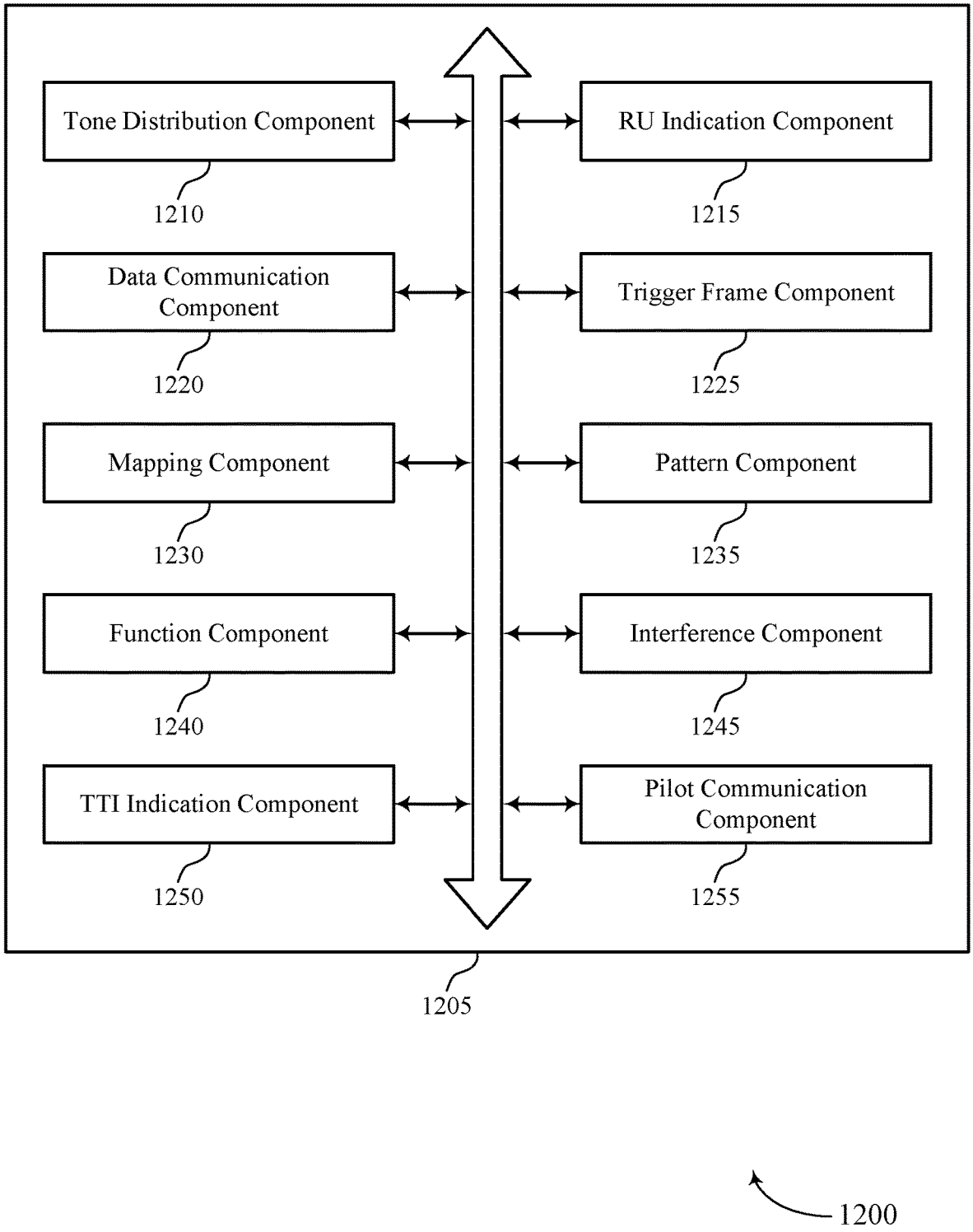
Tone Distribution Component
1210
RU Indication Component
1215
Data Communication Component
1220
Trigger Frame Component
1225
Mapping Component
1230
Pattern Component
1235
Function Component
1240
Interference Component
1245
TTI Indication Component
1250
Pilot Communication Component
1255
1205
1200

Figure 12

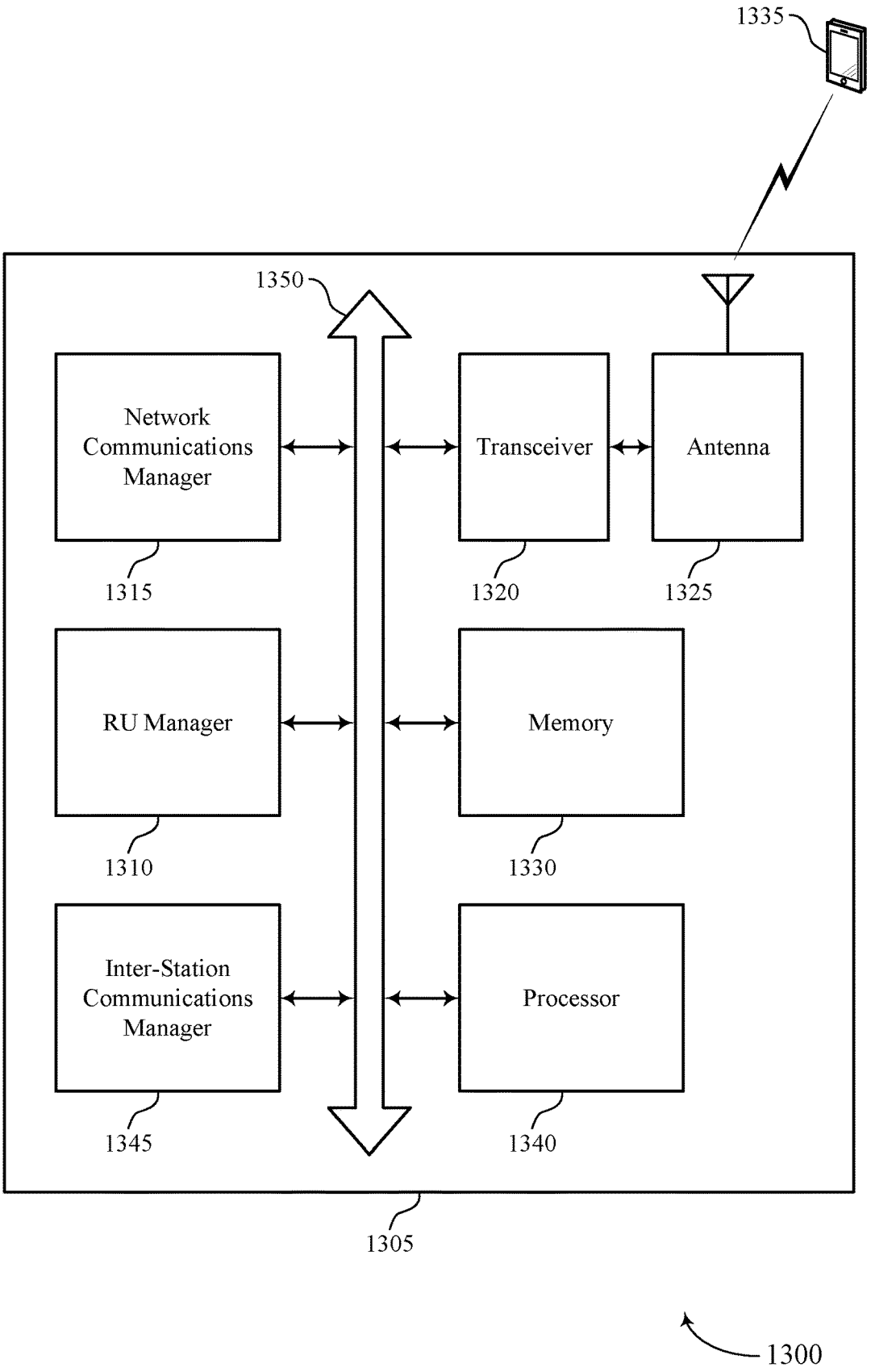
1335
1350
Network Communications Manager
Transceiver
Antenna
1315
1320
1325
RU Manager
Memory
1310
1330
Inter-Station Communications Manager
Processor
1345
1340
1305
1300

Figure 13

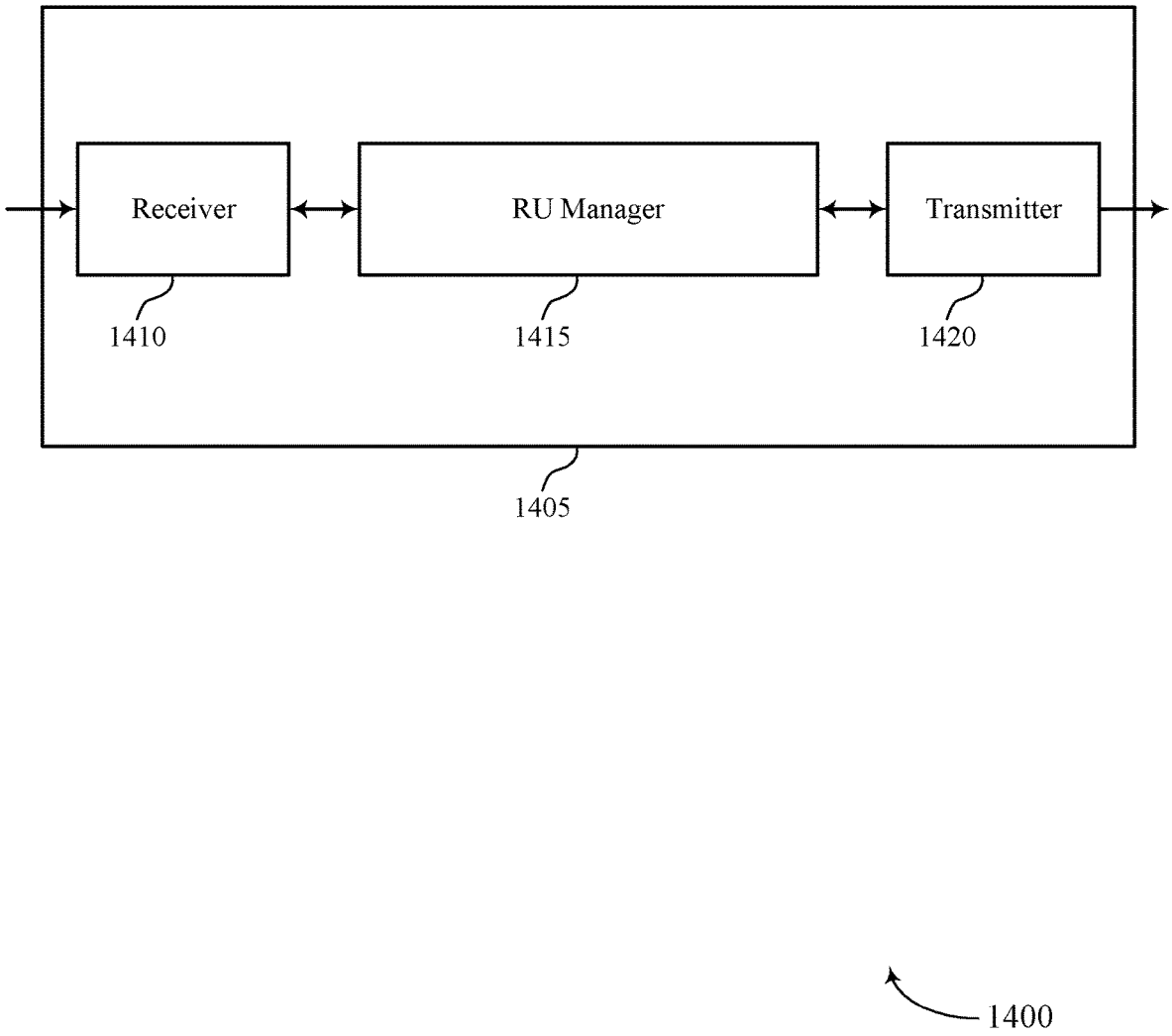

Figure 14

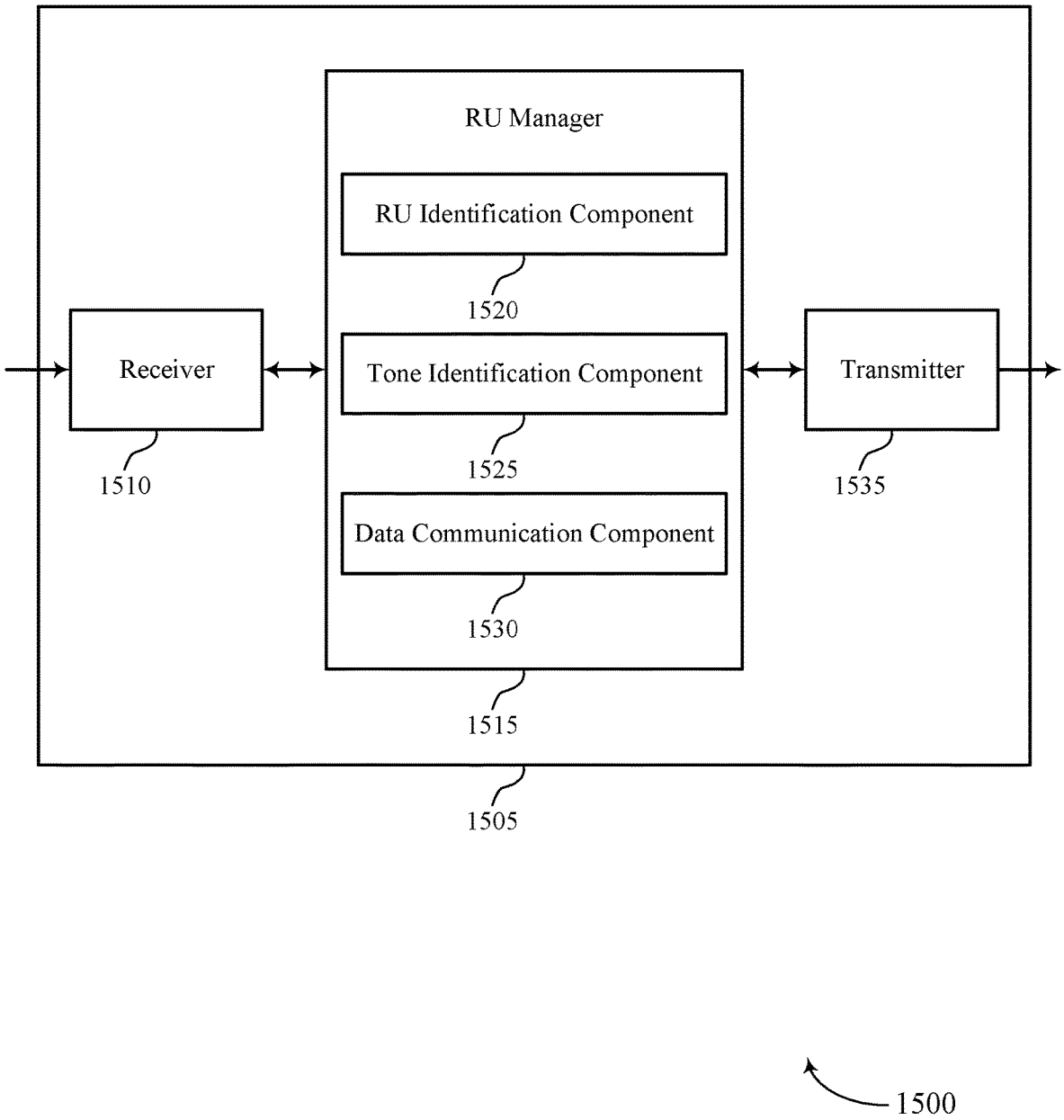
RU Manager
RU Identification Component
1520
Receiver
Tone Identification Component
Transmitter
1510
1525
1535
Data Communication Component
1530
1515
1505
1500

Figure 15

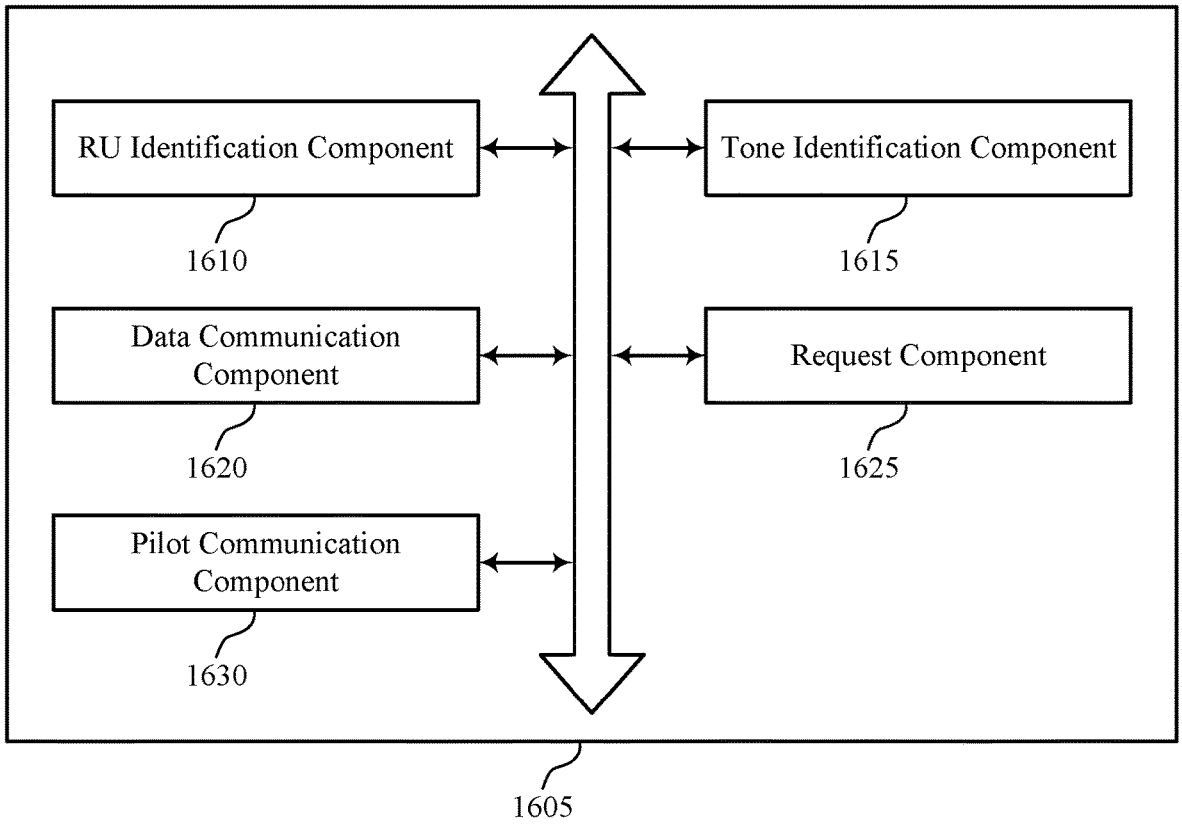

1600

Figure 16

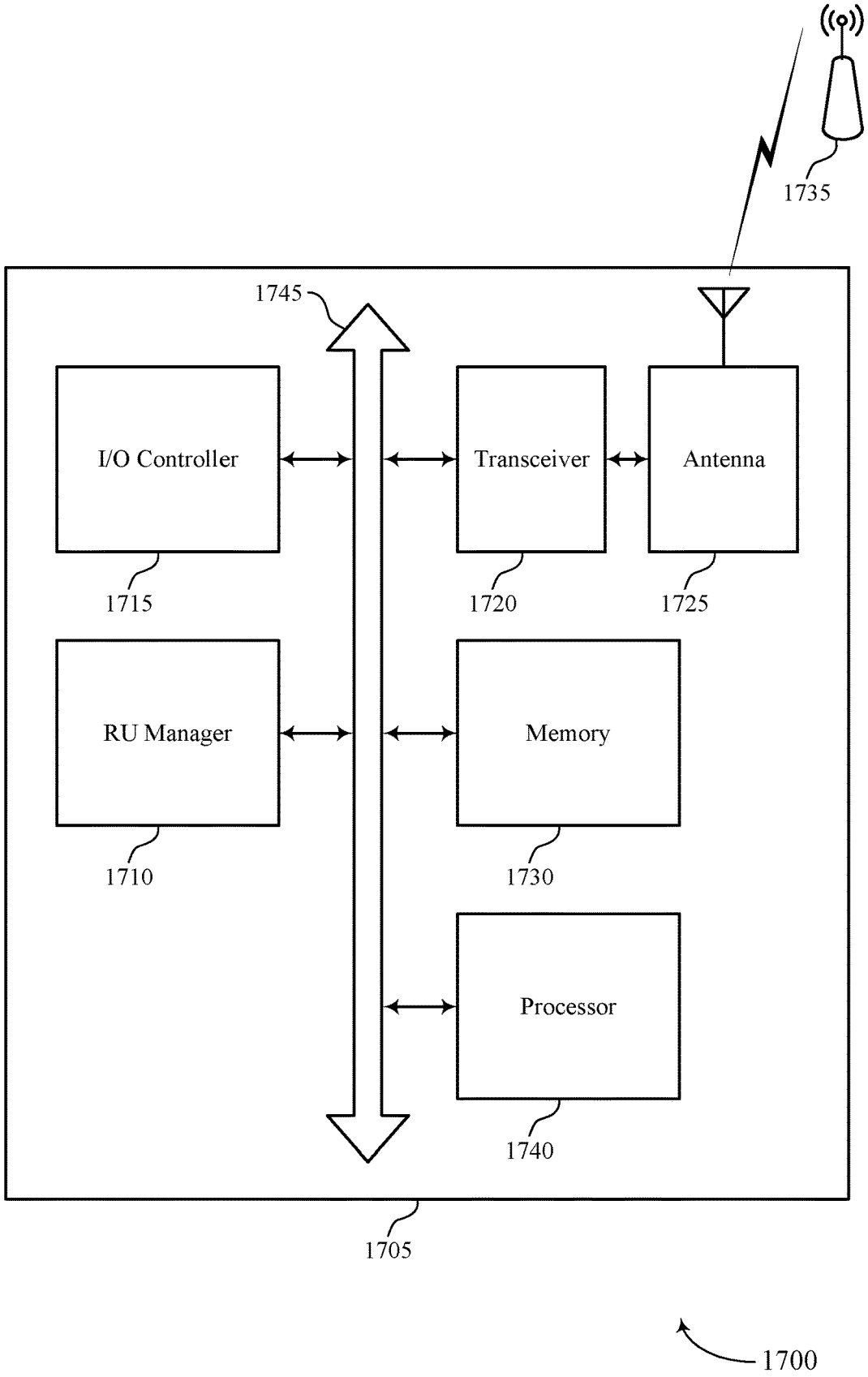
1735
1745
I/O Controller
Transceiver
Antenna
1715
1720
1725
RU Manager
Memory
1710
1730
Processor
1740
1705
1700

Figure 17

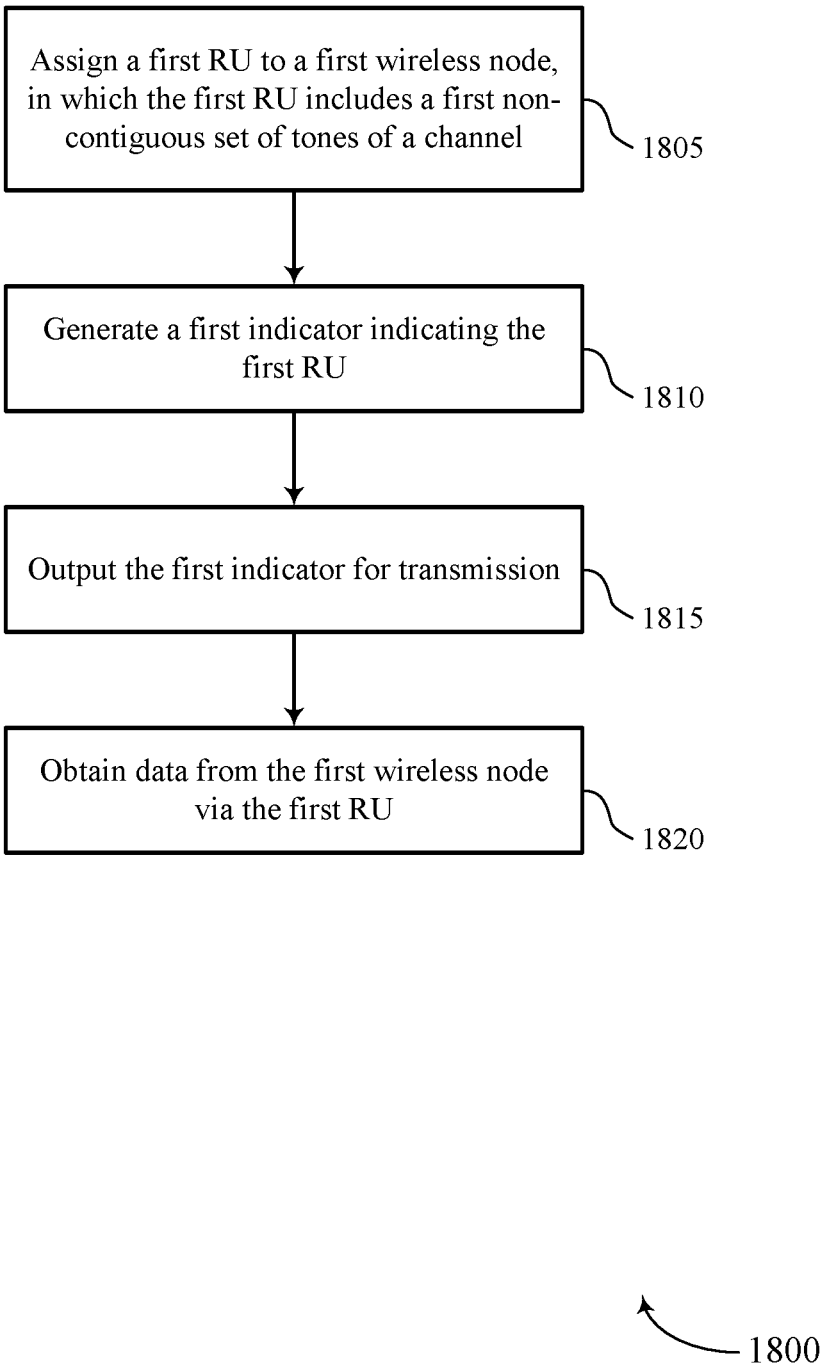
Assign a first RU to a first wireless node, in which the first RU includes a first non-contiguous set of tones of a channel
1805
Generate a first indicator indicating the first RU
1810
Output the first indicator for transmission
1815
Obtain data from the first wireless node via the first RU
1820
1800

Figure 18

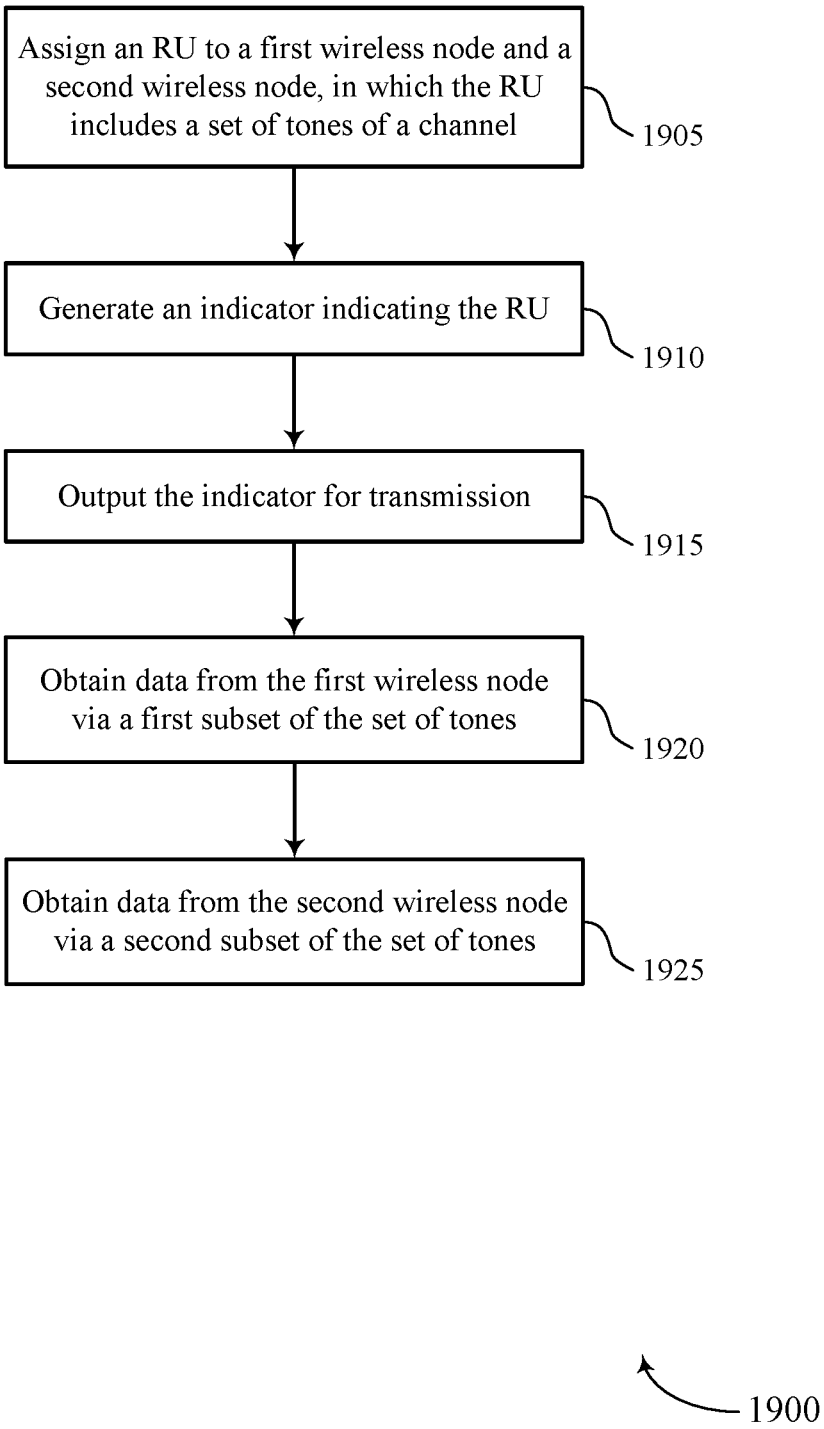
Assign an RU to a first wireless node and a second wireless node, in which the RU includes a set of tones of a channel
1905
Generate an indicator indicating the RU
1910
Output the indicator for transmission
1915
Obtain data from the first wireless node via a first subset of the set of tones
1920
Obtain data from the second wireless node via a second subset of the set of tones
1925
1900

Figure 19

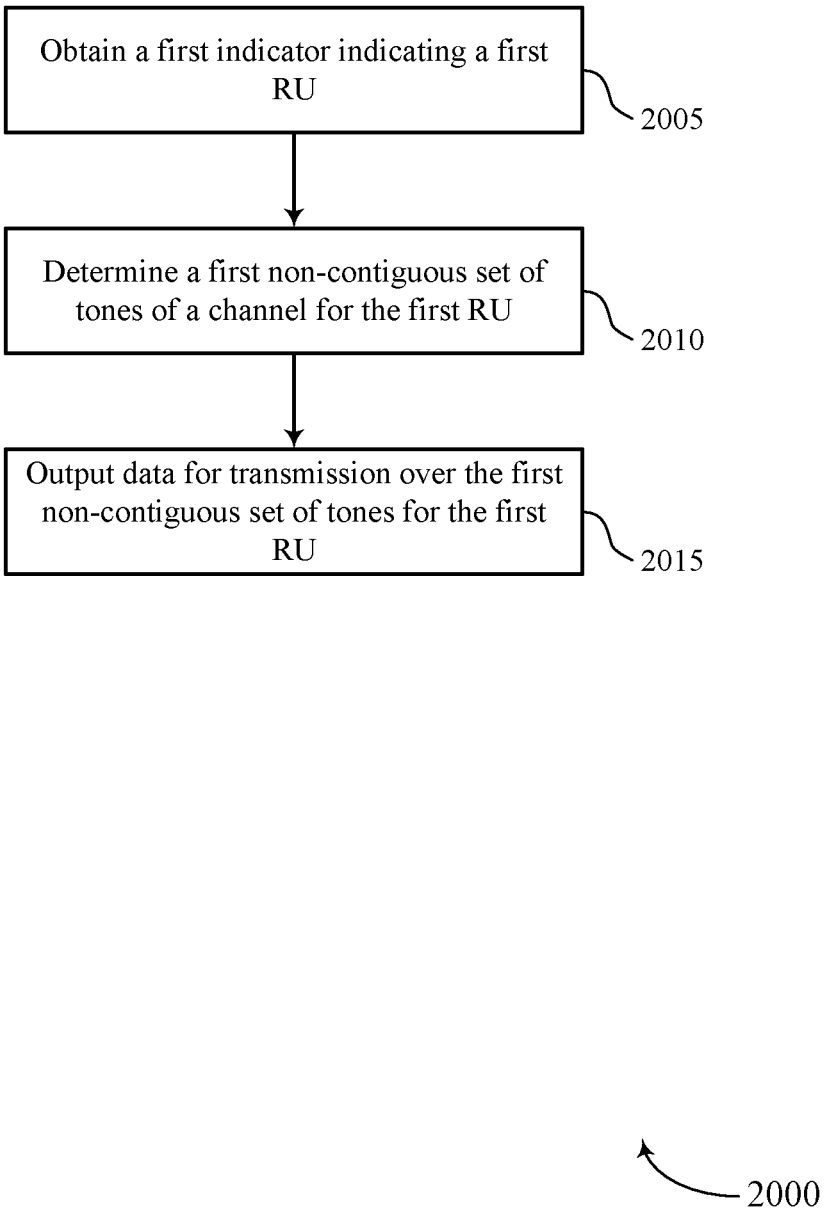
Obtain a first indicator indicating a first RU
2005
Determine a first non-contiguous set of tones of a channel for the first RU
2010
Output data for transmission over the first non-contiguous set of tones for the first RU
2015
2000

Figure 20

RESOURCE UNIT SPREADING

CROSS REFERENCES

[0001] The present Application for Patent claims the benefit of U.S. Provisional Patent Application No. 62/694,928 by Asterjadhi et al., entitled "Resource Unit Spreading," filed Jul. 6, 2018, and U.S. Provisional Patent Application No. 62/713,465 by Yang et al., entitled "A Configuration for Distributed Resource Units," filed Aug. 1, 2018, both of which are assigned to the assignee hereof, and expressly incorporated herein.

TECHNICAL FIELD

[0002] This disclosure relates generally to wireless communications and, more specifically, to resource unit (RU) spreading.

BACKGROUND

[0003] A wireless local area network (WLAN) may be formed by one or more access points (APs) that provide a shared wireless communication medium for use by a number of client devices also referred to as stations (STAs). The basic building block of a WLAN conforming to the Institute of Electrical and Electronics Engineers (IEEE) 802.11 family of standards is a Basic Service Set (BSS), which is managed by an AP. Each BSS is identified by a Basic Service Set Identifier (BSSID) that is advertised by the AP. An AP periodically broadcasts beacon frames to enable any STAs within wireless range of the AP to establish or maintain a communication link with the WLAN.

[0004] Some wireless communications systems (for example, Wi-Fi or WLAN systems) may support allocating multiple resource units (RUs) in a channel bandwidth. These RUs may be used by APs or STAs for transmission of data and pilot signals on the downlink and/or uplink. However, the configurations of these RUs—such as the locations of the allocated data and pilot tones for each RU—may not efficiently utilize the available transmit power for a device. Additionally or alternatively, the RUs may support limited frequency diversity, reducing the reliability of messages transmitted by the device in the RUs.

SUMMARY

[0005] The systems, methods, and devices of this disclosure each have several innovative aspects, no single one of which is solely responsible for the desirable attributes disclosed herein.

[0006] One innovative aspect of the subject matter described in this disclosure can be implemented in a method for wireless communication. The method includes assigning a first resource unit (RU) to a first wireless node, in which the first RU includes a first non-contiguous set of tones of a channel, generating a first indicator indicating the first RU, outputting the first indicator for transmission, and obtaining data from the first wireless node via the first RU.

[0007] Another innovative aspect of the subject matter described in this disclosure can be implemented in a wireless communication device. The wireless communication device includes a processor, memory coupled with the processor, and instructions stored in the memory. The instructions may be executable by the processor to cause the apparatus to assign a first RU to a first wireless node, in which the first RU includes a first non-contiguous set of tones of a channel, generate a first indicator indicating the first RU, output the first indicator for transmission, and obtain data from the first wireless node via the first RU.

[0008] In some implementations, the methods and wireless communication devices may be configured to assign a second RU to a second wireless node, in which the second RU includes a second non-contiguous set of tones of the channel, generate a second indicator indicating the second RU, output the second indicator for transmission, and obtain data from the second wireless node via the second RU.

[0009] In some implementations of the methods and wireless communication devices, the first non-contiguous set of tones may be interspersed with the second non-contiguous set of tones.

[0010] In some implementations, the methods and wireless communication devices may be configured to generate a trigger frame including the first indicator and the second indicator and output the trigger frame for transmission. Outputting the trigger frame may include outputting the first indicator and outputting the second indicator.

[0011] In some implementations of the methods and wireless communication devices, the data from the first wireless node and the data from the second wireless node may be obtained concurrently.

[0012] In some implementations, the methods and wireless communication devices may be configured to determine the first non-contiguous set of tones and the second non-contiguous set of tones from a set of tones associated with a channel.

[0013] In some implementations, the methods and wireless communication devices may be configured to generate an indication of a mapping from the first indicator to the first non-contiguous set of tones and output the indication of the mapping for transmission.

[0014] In some implementations, the methods and wireless communication devices may be configured to change the first non-contiguous set of tones on a periodic basis according to a pattern.

[0015] In some implementations, the methods and wireless communication devices may be configured to generate an indication of the pattern and output the indication of the pattern for transmission.

[0016] In some implementations of the methods and wireless communication devices, the first non-contiguous set of tones may be defined at least in part by a function.

[0017] In some implementations of the methods and wireless communication devices, the function may be an example of a hashing function that provides a start index for the first non-contiguous set of tones.

[0018] In some implementations, the methods and wireless communication devices may be configured to generate one or both of an indication of the function or one or more parameter values for the function and output, for transmission, one or both of the indication of the function or the one or more parameter values.

[0019] In some implementations, the methods and wireless communication devices may be configured to obtain a request from the first wireless node requesting an RU including a non-contiguous set of tones. The first RU may be assigned to the first wireless node in response to the request.

[0020] In some implementations, the methods and wireless communication devices may be configured to obtain a message from the first wireless node indicating that the first

wireless node is experiencing interference. The first RU may be assigned to the first wireless node in response to the message.

[0021] In some implementations, the methods and wireless communication devices may be configured to determine, for the channel, one or more tones experiencing interference and exclude the one or more determined tones from the first non-contiguous set of tones.

[0022] In some implementations, the methods and wireless communication devices may be configured to obtain a message from the first wireless node or another wireless node indicating the one or more tones experiencing the interference. Determining the one or more tones may involve determining the one or more tones according to the message.

[0023] In some implementations of the methods and wireless communication devices, the message may include a channel quality indicator (CQI) index or a bandwidth query response (BQR).

[0024] In some implementations, the methods and wireless communication devices may be configured to allocate a transmission time interval (TTI) for the first wireless node to transmit the data, generate an indication of the TTI, and output the indication of the TTI for transmission. The TTI may include a set of time slots and the first non-contiguous set of tones is different in at least one time slot of the set of time slots than at least one other time slot of the set of time slots.

[0025] In some implementations, the methods and wireless communication devices may be configured to generate an indication of a mapping from the first indicator to the first non-contiguous set of tones for each of the set of time slots and output the indication of the mapping for transmission.

[0026] In some implementations of the methods and wireless communication devices, the first non-contiguous set of tones may change in each of the set of time slots according to a pattern, and the methods and wireless communication devices may be configured to generate an indication of the pattern and output the indication of the pattern for transmission.

[0027] In some implementations, the methods and wireless communication devices may be configured to generate a trigger frame including the first indicator and the indication of the TTI. Outputting the first indicator and the indication of the TTI for transmission may include outputting the trigger frame for transmission.

[0028] In some implementations, the methods and wireless communication devices may be configured to generate an indication of a time duration of each of the set of time slots and output the indication of the time duration of each of the set of time slots for transmission.

[0029] In some implementations, the methods and wireless communication devices may be configured to determine the first non-contiguous set of tones distributed across a channel bandwidth, in which a majority of the first non-contiguous set of tones includes distributed pairs of adjacent tones and the channel bandwidth includes one or more leading unused edge tones, a first contiguous portion of useful tones, one or more unused direct current (DC) tones, a second contiguous portion of useful tones, and one or more following unused edge tones, the first contiguous portion of useful tones and the second contiguous portion of useful tones including the determined first non-contiguous set of tones, obtain data over a set of data tones of the determined first non-contiguous set of tones, and obtain one or more pilot signals over a set of pilot tones of the determined first non-contiguous set of tones.

[0030] In some implementations, the methods and wireless communication devices may be configured to allocate the channel bandwidth for a set of logic RUs including at least the first RU, in which pilot tones for the set of logic RUs form one or more contiguous sets of pilot tones, and each set of the one or more contiguous sets of pilot tones borders the one or more leading unused edge tones, the one or more unused DC tones, or the one or more following unused edge tones.

[0031] In some implementations, the methods and wireless communication devices may be configured to allocate the channel bandwidth for a set of logic RUs including at least the first RU, in which pilot tones for the set of logic RUs form one or more contiguous sets of pilot tones, and each set of the one or more contiguous sets of pilot tones is allocated to central tones in the first contiguous portion of useful tones or to central tones in the second contiguous portion of useful tones.

[0032] In some implementations of the methods and wireless communication devices, each pilot tone of the set of pilot tones may be contiguous to two data tones of the set of data tones.

[0033] In some implementations, the methods and wireless communication devices may be configured to additionally assign the first RU to a second wireless node different than the first wireless node. The data from the first wireless node may be obtained via a first subset of the first non-contiguous set of tones, and the methods and wireless communication devices may be configured to obtain data from the second wireless via a second subset of the first non-contiguous set of tones.

[0034] In some implementations of the methods and wireless communication devices, the first subset of the first non-contiguous set of tones may be non-contiguous and the second subset of the first non-contiguous set of tones may be non-contiguous.

[0035] In some implementations of the methods and wireless communication devices, the first subset of the first non-contiguous set of tones may be interspersed with the second subset of the first non-contiguous set of tones.

[0036] In some implementations of the methods and wireless communication devices, the data from the first wireless node and the data from the second wireless node may be obtained concurrently.

[0037] In some implementations, the methods and wireless communication devices may be configured to generate a trigger frame including a first field indicating the first indicator is for the first wireless node and a second field indicating the first indicator is for the second wireless node and output the trigger frame for transmission.

[0038] In some implementations of the methods and wireless communication devices, the first subset of the first non-contiguous set of tones and the second subset of the first non-contiguous set of tones may be defined at least in part by a function.

[0039] In some implementations, the methods and wireless communication devices may be configured to generate an indication of the function and output the indication of the function for transmission.

[0040] In some implementations of the methods and wireless communication devices, one or both of the data from the

first wireless node or the data from the second wireless node may be obtained over a time interval, the time interval including a set of time slots and one or both of the first subset of the first non-contiguous set of tones or the second subset of the first non-contiguous set of tones may change in at least one time slot of the set of time slots.

[0041] In some implementations of the methods and wireless communication devices, the first subset of the first non-contiguous set of tones may change in each of the set of time slots according to a pattern, and the methods and wireless communication devices may be configured to generate an indication of the pattern and output the indication of the pattern for transmission.

[0042] Another innovative aspect of the subject matter described in this disclosure can be implemented in a method for wireless communication. The method includes obtaining a first indicator indicating a first RU, determining a first non-contiguous set of tones of a channel for the first RU, and outputting data for transmission over the first non-contiguous set of tones for the first RU.

[0043] Yet another innovative aspect of the subject matter described in this disclosure can be implemented in a wireless communication device. The wireless communication device includes a processor, memory coupled with the processor, and instructions stored in the memory. The instructions may be executable by the processor to cause the apparatus to obtain a first indicator indicating a first RU, determine a first non-contiguous set of tones of a channel for the first RU, and output data for transmission over the first non-contiguous set of tones for the first RU.

[0044] In some implementations, the methods and wireless communication devices may be configured to obtain one or more of a trigger frame including the first indicator, an indication of a mapping from the first indicator to the first non-contiguous set of tones, an indication of a pattern for changing the first non-contiguous set of tones on a periodic basis, an indication of a function defining the first non-contiguous set of tones, or one or more parameters for the function, and the first non-contiguous set of tones for the first RU may be determined according to one or more of the trigger frame, the mapping, the pattern, the function, or the one or more parameters for the function.

[0045] In some implementations, the methods and wireless communication devices may be configured to output, for transmission, one or both of a request requesting an RU or a message indicating that the wireless node is experiencing interference, in which the first indicator indicating the first RU may be obtained in response to one or both of the request or the message.

[0046] In some implementations of the methods and wireless communication devices, a majority of the first non-contiguous set of tones includes distributed pairs of adjacent tones across a channel bandwidth and the channel bandwidth includes one or more leading unused edge tones, a first contiguous portion of useful tones, one or more unused DC tones, a second contiguous portion of useful tones, and one or more following unused edge tones, the first contiguous portion of useful tones and the second contiguous portion of useful tones including the determined first non-contiguous set of tones. The methods and wireless communication devices may be configured to output, for transmission, one or more pilot signals over a set of pilot tones of the first non-contiguous set of tones, and the data may be output for transmission over a set of data tones of the first non-contiguous set of tones.

[0047] In some implementations, the methods and wireless communication devices may be configured to determine that the first RU is additionally assigned to a second wireless node different than the wireless node, and outputting the data may further involve outputting the data for transmission over a first subset of the first non-contiguous set of tones for the first RU.

BRIEF DESCRIPTION OF THE DRAWINGS

[0048] Details of one or more implementations of the subject matter described in this disclosure are set forth in the accompanying drawings and the description below. Other features, aspects, and advantages will become apparent from the description, the drawings and the claims. Note that the relative dimensions of the following figures may not be drawn to scale.

[0049] FIG. **1** shows a pictorial diagram of an example wireless communication network.

[0050] FIG. **2** shows a pictorial diagram of another example wireless communication network.

[0051] FIG. **3** shows an example of a resource unit (RU) configuration in accordance with aspects of the present disclosure.

[0052] FIG. **4** shows an example of a set of tones for a spread RU in a channel.

[0053] FIGS. **5**A and **5**B show example sets of tones for RUs that are divided into multiple subsets of tones for multiple stations (STAs).

[0054] FIG. **6** shows an example of a frequency and time spreading configuration for an RU.

[0055] FIG. **7** shows an example of a wireless communications system.

[0056] FIG. **8** shows an example of a channel bandwidth configuration.

[0057] FIGS. **9**A, **9**B, and **9**C show examples of tone mapping configurations.

[0058] FIGS. **10** and **11** show block diagrams of example wireless communication devices.

[0059] FIG. **12** shows a block diagram of an example RU manager.

[0060] FIG. **13** shows a block diagram of an example access point (AP).

[0061] FIGS. **14** and **15** show block diagrams of example wireless communication devices.

[0062] FIG. **16** shows a block diagram of an example RU manager.

[0063] FIG. **17** shows a block diagram of an example STA.

[0064] FIGS. **18-20** show flowcharts illustrating example processes for RU spreading according to some implementations.

[0065] Like reference numbers and designations in the various drawings indicate like elements.

DETAILED DESCRIPTION

[0066] The following description is directed to certain implementations for the purposes of describing innovative aspects of this disclosure. However, a person having ordinary skill in the art will readily recognize that the teachings herein can be applied in a multitude of different ways. The described implementations can be implemented in any

device, system or network that is capable of transmitting and receiving radio frequency (RF) signals according to one or more of the Institute of Electrical and Electronics Engineers (IEEE) 802.11 standards, the IEEE 802.15 standards, the Bluetooth® standards as defined by the Bluetooth Special Interest Group (SIG), or the Long Term Evolution (LTE), 3G, 4G or 5G (New Radio (NR)) standards promulgated by the 3rd Generation Partnership Project (3GPP), among others. The described implementations can be implemented in any device, system or network that is capable of transmitting and receiving RF signals according to one or more of the following technologies or techniques: code division multiple access (CDMA), time division multiple access (TDMA), frequency division multiple access (FDMA), orthogonal FDMA (OFDMA), single-carrier FDMA (SC-FDMA), single-user (SU) multiple-input multiple-output (MIMO) and multi-user (MU) MIMO. The described implementations also can be implemented using other wireless communication protocols or RF signals suitable for use in one or more of a wireless personal area network (WPAN), a wireless local area network (WLAN), a wireless wide area network (WWAN), or an internet of things (IOT) network.

[0067] Various implementations relate generally to the assignment of non-contiguous tones of a channel for a resource unit (RU). Some implementations more specifically relate to an access point (AP) assigning an RU including a non-contiguous set of tones of a channel to a wireless node, such as a station (STA). This non-contiguous set of tones includes at least one portion of tones that is non-contiguous in the frequency domain with all other portions of tones of the set. For example, the non-contiguous set of tones may include at least some tones that are non-contiguous in frequency with all other tones of the set. The AP may generate an indicator for this RU and may transmit the indicator to the wireless node. The wireless node may receive the indicator, determine the non-contiguous set of tones for the indicated RU, and transmit data over the non-contiguous set of tones for the RU. The AP may receive the data via the RU (for example, over the non-contiguous set of tones).

[0068] In some implementations, the AP, the STA, or both may determine the non-contiguous set of tones based on a mapping of tones, a function (for example, a hashing function), or both. The non-contiguous set of tones for an RU may change for different time intervals, for example, according to a pattern, according to a function, or based on a message from the AP. In some examples, RUs for different STAs may be interspersed (for example, interleaved) in frequency. Additionally, more than one STA may be assigned the same RU. In such implementations, each STA assigned the same RU may determine a subset of tones to use from the assigned RU.

[0069] In some implementations, the majority of tones for an RU may be mapped to distributed pairs of adjacent tones in the channel bandwidth. These tones may include data tones and pilot tones. In a first implementation, the data tones are mapped to pairs of adjacent tones, and the pilot tones are mapped to tones near the edges of the bandwidth or near a direct current (DC) tone in the center of the bandwidth. In a second implementation, the data tones are mapped to pairs of adjacent tones, and the pilot tones are mapped to tones in the center of each half of the bandwidth. In a third implementation, most of the data tones are mapped to pairs of adjacent tones, but the pilot tones may each be allocated to one set of data tones, and each pilot tone is allocated between the two data tones in the respective one set of data tones. In some of these implementations, the allocation of the pilot tones may support at least two pilot tones being far apart in the channel bandwidth for an RU (for example, separated by 30% or 50% of the total channel bandwidth).

[0070] Particular implementations of the subject matter described in this disclosure can be implemented to realize one or more of the following potential advantages. In some implementations, the described techniques can be used to efficiently utilize a given bandwidth. For example, an AP may distribute RUs across a channel bandwidth or bandwidth part to improve the frequency diversity and available power for transmissions. If the tones of an RU are close together in the frequency domain (for example, contiguous in frequency), a narrow band interference may wipe out the contents of the corresponding RU. For example, the tones of an RU may be subject to narrow band interference from neighboring APs and/or STAs. Aspects of the present disclosure support RU configurations including non-contiguous sets of tones spread over a wide frequency band, mitigating the effects of narrow band interference. Additionally or alternatively, spreading the tones of the RU over a wider channel bandwidth may support transmitting data using the full power advantage. The full power advantage may correspond to transmitting with a maximum transmit power or peak power, while still remaining below a power spectral density (PSD) limit for the system.

[0071] FIG. **1** shows a block diagram of an example wireless communication network **100**. According to some aspects, the wireless communication network **100** can be an example of a wireless local area network (WLAN) such as a Wi-Fi network (and will hereinafter be referred to as WLAN **100**). For example, the WLAN **100** can be a network implementing at least one of the IEEE 802.11 family of standards (such as that defined by the IEEE 802.11-2016 specification or amendments thereof including, but not limited to, 802.11ah, 802.11ad, 802.11ay, 802.11ax, 802.11az, 802.11ba and 802.11be). The WLAN **100** may include numerous wireless communication devices such as an AP **102** and multiple STAs **104**. While only one AP **102** is shown, the WLAN **100** also can include multiple APs **102**.

[0072] Each of the STAs **104** also may be referred to as a mobile station (MS), a mobile device, a mobile handset, a wireless handset, an access terminal (AT), a user equipment (UE), a subscriber station (SS), or a subscriber unit, among other possibilities. The STAs **104** may represent various devices such as mobile phones, personal digital assistant (PDAs), other handheld devices, netbooks, notebook computers, tablet computers, laptops, display devices (for example, TVs, computer monitors, navigation systems, among others), music or other audio or stereo devices, remote control devices ("remotes"), printers, kitchen or other household appliances, key fobs (for example, for passive keyless entry and start (PKES) systems), among other possibilities.

[0073] A single AP **102** and an associated set of STAs **104** may be referred to as a basic service set (BSS), which is managed by the respective AP **102**. FIG. **1** additionally shows an example coverage area **106** of the AP **102**, which may represent a basic service area (BSA) of the WLAN **100**. The BSS may be identified to users by a service set identifier (SSID), as well as to other devices by a basic service set

identifier (BSSID), which may be a medium access control (MAC) address of the AP **102**. The AP **102** periodically broadcasts beacon frames ("beacons") including the BSSID to enable any STAs **104** within wireless range of the AP **102** to "associate" or re-associate with the AP **102** to establish a respective communication link **108** (hereinafter also referred to as a "Wi-Fi link"), or to maintain a communication link **108**, with the AP **102**. For example, the beacons can include an identification of a primary channel used by the respective AP **102** as well as a timing synchronization function for establishing or maintaining timing synchronization with the AP **102**. The AP **102** may provide access to external networks to various STAs **104** in the WLAN via respective communication links **108**.

[0074] To establish a communication link **108** with an AP **102**, each of the STAs **104** is configured to perform passive or active scanning operations ("scans") on frequency channels in one or more frequency bands (for example, the 2.4 GHz, 5 GHz, 6 GHz or 60 GHz bands). To perform passive scanning, a STA **104** listens for beacons, which are transmitted by respective APs **102** at a periodic time interval referred to as the target beacon transmission time (TBTT) (measured in time units (TUs) where one TU may be equal to **1024** microseconds (μs)). To perform active scanning, a STA **104** generates and sequentially transmits probe requests on each channel to be scanned and listens for probe responses from APs **102**. Each STA **104** may be configured to identify or select an AP **102** with which to associate based on the scanning information obtained through the passive or active scans, and to perform authentication and association operations to establish a communication link **108** with the selected AP **102**. The AP **102** assigns an association identifier (AID) to the STA **104** at the culmination of the association operations, which the AP **102** uses to track the STA **104**.

[0075] As a result of the increasing ubiquity of wireless networks, a STA **104** may have the opportunity to select one of many BSSs within range of the STA or to select among multiple APs **102** that together form an extended service set (ESS) including multiple connected BSSs. An extended network station associated with the WLAN **100** may be connected to a wired or wireless distribution system that may allow multiple APs **102** to be connected in such an ESS. As such, a STA **104** can be covered by more than one AP **102** and can associate with different APs **102** at different times for different transmissions. Additionally, after association with an AP **102**, a STA **104** also may be configured to periodically scan its surroundings to find a more suitable AP **102** with which to associate. For example, a STA **104** that is moving relative to its associated AP **102** may perform a "roaming" scan to find another AP **102** having more desirable network characteristics such as a greater received signal strength indicator (RSSI) or a reduced traffic load.

[0076] In some cases, STAs **104** may form networks without APs **102** or other equipment other than the STAs **104** themselves. One example of such a network is an ad hoc network (or wireless ad hoc network). Ad hoc networks may alternatively be referred to as mesh networks or peer-to-peer (P2P) networks. In some cases, ad hoc networks may be implemented within a larger wireless network such as the WLAN **100**. In such implementations, while the STAs **104** may be capable of communicating with each other through the AP **102** using communication links **108**, STAs **104** also can communicate directly with each other via direct wireless links **110**. Additionally, two STAs **104** may communicate via a direct wireless link **110** regardless of whether both STAs **104** are associated with and served by the same AP **102**. In such an ad hoc system, one or more of the STAs **104** may assume the role filled by the AP **102** in a BSS. Such a STA **104** may be referred to as a group owner (GO) and may coordinate transmissions within the ad hoc network. Examples of direct wireless links **110** include Wi-Fi Direct connections, connections established by using a Wi-Fi Tunneled Direct Link Setup (TDLS) link, and other P2P group connections.

[0077] The APs **102** and STAs **104** may function and communicate (via the respective communication links **108**) according to the IEEE 802.11 family of standards (such as that defined by the IEEE 802.11-2016 specification or amendments thereof including, but not limited to, 802.11ah, 802.11ad, 802.11ay, 802.11ax, 802.11az, 802.11ba and 802.11be). These standards define the WLAN radio and baseband protocols for the physical layer (PHY) and medium access control (MAC) layer. The APs **102** and STAs **104** transmit and receive wireless communications (hereinafter also referred to as "Wi-Fi communications") to and from one another in the form of physical layer convergence protocol (PLCP) protocol data units (PPDUs). The APs **102** and STAs **104** in the WLAN **100** may transmit PPDUs over an unlicensed spectrum, which may be a portion of spectrum that includes frequency bands traditionally used by Wi-Fi technology, such as the 2.4 GHz band, the 5 GHz band, the 60 GHz band, the 3.6 GHz band, and the 900 MHz band. Some implementations of the APs **102** and STAs **104** described herein also may communicate in other frequency bands, such as the 6 GHz band, which may support both licensed and unlicensed communications. The APs **102** and STAs **104** also can be configured to communicate over other frequency bands such as shared licensed frequency bands, where multiple operators may have a license to operate in the same or overlapping frequency band or bands.

[0078] Each of the frequency bands may include multiple sub-bands or frequency channels. For example, PPDUs conforming to the IEEE 802.11n, 802.11ac and 802.11ax standard amendments may be transmitted over the 2.4 and 5 GHz bands, each of which is divided into multiple 20 MHz channels. As such, these PPDUs are transmitted over a physical channel having a minimum bandwidth of 20 MHz, but larger channels can be formed through channel bonding. For example, PPDUs may be transmitted over physical channels having bandwidths of 40 MHz, 80 MHz, 160 or 320 MHz by bonding together multiple 20 MHz channels.

[0079] Each PPDU is a composite structure that includes a PHY preamble and a payload in the form of a PLCP service data unit (PSDU). The information provided in the preamble may be used by a receiving device to decode the subsequent data in the PSDU. In instances in which PPDUs are transmitted over a bonded channel, the preamble fields may be duplicated and transmitted in each of the multiple component channels. The PHY preamble may include both a legacy portion (or "legacy preamble") and a non-legacy portion (or "non-legacy preamble"). The legacy preamble may be used for packet detection, automatic gain control and channel estimation, among other uses. The legacy preamble also may generally be used to maintain compatibility with legacy devices. The format of, coding of, and information provided

in the non-legacy portion of the preamble is based on the particular IEEE 802.11 protocol to be used to transmit the payload.

[0080] As described above, APs **102** and STAs **104** can support multi-user (MU) communications; that is, concurrent transmissions from one device to each of multiple devices (for example, multiple simultaneous downlink communications from an AP **102** to corresponding STAs **104**), or concurrent transmissions from multiple devices to a single device (for example, multiple simultaneous uplink transmissions from corresponding STAs **104** to an AP **102**). To support the MU transmissions, the APs **102** and STAs **104** may utilize multi-user multiple-input, multiple-output (MU-MIMO) and multi-user orthogonal frequency division multiple access (MU-OFDMA) techniques.

[0081] In MU-OFDMA schemes, the available frequency spectrum of the wireless channel may be divided into multiple resource units (RUs) each including a number of different frequency subcarriers ("tones"). Different RUs may be allocated or assigned by an AP **102** to different STAs **104** at particular times. The sizes and distributions of the RUs may be referred to as an RU allocation. In some implementations, RUs may be allocated in 2 MHz intervals, and as such, the smallest RU may include 26 tones consisting of 24 data tones and 2 pilot tones. Consequently, in a 20 MHz channel, up to 9 RUs (such as 2 MHz, 26-tone RUs) may be allocated (because some tones are reserved for other purposes). Similarly, in a 160 MHz channel, up to 74 RUs may be allocated. Larger 52 tone, 106 tone, 242 tone, 484 tone and 996 tone RUs may also be allocated. Adjacent RUs may be separated by a null subcarrier (such as a DC subcarrier), for example, to reduce interference between adjacent RUs, to reduce receiver DC offset, and to avoid transmit center frequency leakage.

[0082] For uplink MU transmissions, an AP **102** can transmit a trigger frame to initiate and synchronize an uplink MU-OFDMA or uplink MU-MIMO transmission from multiple STAs **104** to the AP **102**. Such trigger frames may thus enable multiple STAs **104** to send uplink traffic to the AP **102** concurrently in time. A trigger frame may address one or more STAs **104** through respective association identifiers (AIDs) and may assign each AID (and thus each STA **104**) one or more RUs that can be used to send uplink traffic to the AP **102**. The AP **102** also may designate one or more random access (RA) RUs that unscheduled STAs **104** may contend for.

[0083] In some systems, such as WLAN **100**, an AP **102** may assign an RU to a wireless node, such as a STA **104**. The assigned RU may include a non-contiguous set of tones of a channel. This non-contiguous set of tones may include at least some tones that are non-contiguous in the frequency domain with all other tones of the set. The AP **102** may generate an indicator for this RU and may transmit the indicator to the STA **104**. The STA **104** may receive the indicator, determine the non-contiguous set of tones for the indicated RU, and transmit data over the non-contiguous set of tones for the RU. The AP **102** may receive the data via the RU (over the non-contiguous set of tones). By spreading the RU over the non-contiguous set of tones, the AP **102** may support improved frequency diversity for transmissions via the RU.

[0084] FIG. **2** shows a pictorial diagram of another wireless communication network **200**. The wireless communication network **200** may support RU spreading in accordance with aspects of the present disclosure. In some implementations, the wireless communication network **200** may be an example of a WLAN **100** and may include AP **205** and STA **210**, which may be examples of the corresponding devices described with reference to FIG. **1**. AP **205** may provide network coverage for coverage area **215**. AP **205** and STA **210** may communicate over communication link **220** (for example, transmitting data and/or pilot signals on the uplink or the downlink).

[0085] In some examples, the AP **205** may assign a channel to the STA **210** to transmit data to and receive data from the STA **210**. The channel may include tones (also referred to as subcarriers) within the frequency band of the channel. Orthogonal frequency-division multiplexing (OFDM) may be used for transmissions between the AP **205** and the STA **210**. The channel may be divided (in other words, partitioned) into multiple resource units (RUs), and each RU may contain a respective subset of the tones of the channel.

[0086] In some examples, the tones in a contiguous set of tones may lack in frequency diversity. For example, for a same number of tones, a non-contiguous configuration supports greater frequency diversity than a contiguous configuration based on the spread of the tones over a wider bandwidth part. When the tones are close together, a narrow band interference may wipe out the contents of the corresponding RU. For example, in a dense network deployment, the tones may be subject to narrow band interference from an overlapping BSS. Aspects of the present disclosure support RU configurations including non-contiguous sets of tones. The tones of a non-contiguous set of tones are spread in frequency (in other words, tones are spaced apart in frequency) compared with a contiguous set of tones. This may include an RU in which each tone is non-contiguous in frequency with each other tone of the RU or may include an RU in which at least one set of tones is non-contiguous with at least one other set of tones in frequency (for example, the RU may be split into two or more portions separated by gaps in frequency). A non-contiguous configuration may reduce sensitivity of the RU to narrow band interference and has the benefit of diversity gain due to the RU spreading.

[0087] In some examples, the AP **205** may assign an RU, including a non-contiguous set of tones in the channel, to the STA **210**. The AP **205** may generate an indicator **225** for the RU and transmit the indicator **225** to the STA **210**. The STA **210** may receive the indicator **225** from the AP **205** and use the indicator **225** to determine the non-contiguous set of tones for the RU. The STA **210** may transmit data over the non-contiguous set of tones to the AP **205**.

[0088] FIG. **3** shows an example of an RU configuration **300** in accordance with aspects of the present disclosure. In the RU configuration **300**, an RU **310** may be assigned to a STA, such as a STA described with reference to FIGS. **1** and **2**. In one example, RU **310**-*a* is assigned to the STA identified by AID **305**-*a*, RU **310**-*b* is assigned to the STA identified by AID **305**-*b*, RU **310**-*c* is assigned to the STA identified by AID **305**-*c*, RU **310**-*d* is assigned to the STA identified by AID **305**-*d*, RU **310**-*e* is assigned to the STA identified by AID **305**-*e*. The RUs **310** may contain non-contiguous sets of tones. As shown in FIG. **3**, the tones in each non-contiguous set of tones are spread (in other words, spaced apart) in frequency. Although a limited number of tones is shown in FIG. **3** for ease of illustration, it is to be appreciated that a non-contiguous set of tones may have a

larger number of tones (for example, 26 tones, 52 tones, 106 tones, or any other number of tones).

[0089] The tones **315** in a non-contiguous set of tones—such as tones **315**-*a*, **315**-*c*, **315**-*d*, **315**-*f*, **315**-*g*, and **315**-*h* for RU **310**-*c*—may be taken from the set of tones of a channel (for example, a 20 MHz channel, a 40 MHz channel, an 80 MHz channel, a 160 MHz channel, a 320 MHz channel, or any other channel), in which the non-contiguous set of tones is a subset of the set of tones of the channel. As shown in FIG. **3**, adjacent tones in the non-contiguous set of tones for RU **310**-*c* may be separated by spaces (in other words, gaps) occupied by tones **315** in the channel which may be unassigned or assigned to one or more other RUs **310**. In the example shown in FIG. **3**, RU **310**-*a* include a non-contiguous set of tones that is interspersed with the non-contiguous set of tones of RU **310**-*c*. The non-contiguous set of tones of RU **310**-*a* includes tones, such as tones **315**-*b* and **315**-*e*, that are located between tones in the non-contiguous set of tones of RU **310**-*c*. The tones in RU **310**-*a* and RU **310**-*c* may be assigned from the same channel (for example, a 20 MHz channel, a 40 MHz channel, an 80 MHz channel, a 160 MHz channel, a 320 MHz channel, or some other channel). The STAs assigned RU **310**-*a* and RU **310**-*c* may transmit data concurrently to an AP (for example, the AP assigning RU **310**-*a* and RU **310**-*c*) via their respective non-contiguous sets of tones (for example, in uplink PPDUs triggered by a trigger frame) and/or receive data concurrently from the AP via their respective non-contiguous sets of tones. There may be different schemes by which a tone plan for an RU **310** is made available to a STA, as discussed further below.

[0090] In some aspects, a wireless device, such as an AP and/or a STA, may use a map to map each RU **310** to a respective non-contiguous set of tones. The map may be fixed (for example, defined by a standard) or dynamically changed. In some examples, a STA may store the map in memory. In this example, each available RU may be identified by a respective RU value (for example, an RU index number), and the map may map each RU to a respective non-contiguous set of tones by mapping the respective RU value to the respective non-contiguous set of tones. The STA may receive an indictor (for example, an RU value) indicating an RU assigned to the STA (for example, in a trigger frame or in a downlink transmission) from an AP. The STA may determine the non-contiguous set of tones for the assigned RU based on the map. More particularly, the STA may locate the RU value of the assigned RU in the map and determine the non-contiguous set of tones that is mapped to the RU value. In this example, each tone **315** in a channel may be identified by a respective number index, and the map may specify the non-contiguous set of tones for each RU using the number indices of the tones **315**.

[0091] Different maps may be used for different operating frequency bands. For example, different maps may be used for the 2.4 GHz band and the 5.0 GHz band. In this example, a STA may store maps for different operating frequency bands supported by the STA. In operation, the STA may determine which band is currently being used for communication with an AP and use the corresponding map to determine the non-contiguous set of tones for an RU **310** assigned to the STA, as discussed herein. Different maps may also be used for different geographical regions.

[0092] In some aspects, an AP may transmit the map to one or more STAs. For example, the AP may transmit the map to the STA in a beacon or another management frame. In these aspects, a STA receiving the map stores the map in memory and uses the map to determine the non-contiguous set of tones for an RU **310** assigned to the STA by the AP, as discussed above. This allows the AP to change (for example, update) the map used by the STA.

[0093] In some examples, the AP may determine one or more tones **315** experiencing interference (for example, from an overlapping BSS (OBSS)), generate a map that excludes the one or more determined tones **315**, and transmit the generated map to one or more STAs. This may ensure that the non-contiguous set of tones for an RU **310** assigned to a STA by the AP does not include the one or more tones **315** experiencing interference (in other words, the one or more tones **315** experiencing interference are excluded from the non-contiguous set of tones of each RU **310** in the map). In this example, the AP may determine the one or more tones **315** experiencing interference using various methods. In some implementations, the AP may receive a message (for example, a report) from one or more STAs indicating the one or more tones **315** experiencing interference. For example, the AP may receive a channel quality indicator (CQI) or bandwidth query response (BQR) indicating the quality of individual tones **315** and/or groups of tones **315**. In this example, the AP may determine that a tone **315** with low quality is experiencing interference or each tone **315** in a group of tones with low quality is experiencing interference. In some examples, the AP may monitor for an interfering signal on each tone **315** during a time that the AP is not using the tone **315**. If the AP detects an interfering signal of a particular signal strength on a specific tone **315**, the AP may determine the tone **315** is experiencing interference. It is to be appreciated that the AP may employ other methods to determine tones **315** experiencing interference.

[0094] In some aspects, each STA may store multiple maps, in which each map may map the same RU **310** to a different non-contiguous set of tones. In these aspects, the AP may select one of the maps and transmit an indication of the selected map to the STAs in a beacon or another management frame. In these aspects, a STA receiving the indication uses the indicated map to determine the non-contiguous set of tones for an RU **310** assigned to the STA by the AP, as discussed above. In some examples, each map may be identified by a respective map identifier (ID). In some of these examples, the AP may indicate which map to use by transmitting the respective map ID to one or more STAs (for example, in a beacon or another management frame). A STA receiving the map ID uses the map ID to identify the map being used by the AP and uses the identified map to determine the non-contiguous set of tones for an RU **310** assigned to the STA by the AP, as discussed above.

[0095] In some aspects, neighboring APs may use different maps to mitigate interference. For example, each AP may transmit a message to neighboring APs indicating the map in use by the transmitting AP. In this example, an AP receiving the message uses a map that is different than the map indicated in the message to mitigate interference. In some aspects, a map may change over time (for example, on a periodic or aperiodic basis) according to a pattern. For example, for a particular BSS color, the pattern may be known by the STAs.

[0096] In some examples, a map may include different sets of tones (for example, sets of non-contiguous tones) and the map may be changed by changing the mapping between the

RU values and the sets of tones in the map. For example, each set of tones in the map may be identified by a respective set ID (for example, set index number). In this example, the mapping for a particular RU value is specified by the set ID of the set of tones to which the RU value is mapped. In this example, the mapping for the RU value may be changed by changing the set ID associated with the RU value. Thus, the map may be changed by changing the set ID associated with each RU value in the map such that the mapping between the RU values and the sets of tones is changed.

[0097] In the above example, the map may change according to a pattern. For example, the pattern may be specified by a sequence of set IDs for each RU value. In this example, the mapping for a particular RU value is changed by running through a respective sequence of set IDs. For instance, if a sequence for an RU value is given by 1, 3, 5, . . . , n, in which n is a maximum set ID or a maximum odd set ID, then the RU value is first mapped to the set of tones identified by the set ID of 1, then mapped to the set of tones identified by the set ID of 3, and so on. As a result, the set of tones of the corresponding RU **310** is changed by running through the sequence.

[0098] As discussed above, the map may change according to a pattern. For example, the pattern may change the map by changing the mapping between RU values and the sets of tones in the map according to the pattern. For instance, a pattern may involve changing the set ID of each RU **310** by a particular value each time the map is changed. In some examples, a pattern may be defined by a sequence of set IDs for each RU value. In this example, the STA may repeat each sequence. In other words, when the STA reaches the last set ID in the sequence, the STA may start over at the first set ID in the sequence. In some examples, an algorithm may be used to generate a sequence of set IDs for an RU value according to a desired pattern. In this example, the sequence of set IDs generated by the algorithm may be a function of one or more parameters input to the algorithm. The values of the one or more parameters may be chosen according to the desired pattern.

[0099] The map may change periodically. For example, each STA and/or the AP may change the map at regular time intervals. For example, the AP may specify the time interval between changes and may transmit an indication of the time interval to the STAs (for example, in a management frame). In this example, each STA changes the map according to the time interval indicated by the AP. The time interval determines the rate at which each STA changes the map. In some examples, each STA may change the map each time the AP transmits a trigger frame to the STA.

[0100] As discussed above, each STA may change the map according to a pattern. In some examples, the AP may specify the pattern, and transmit an indication of the pattern to the STAs. In these examples, each STA changes the map according to the pattern indicated by the AP. The AP may indicate the pattern using various methods. For the example in which the pattern for each RU value is specified by a sequence of set IDs, the AP may indicate the sequence of set IDs for each RU value. For the example in which the STA uses an algorithm to generate a sequence of set IDs for each RU value, the AP may indicate one or more parameter values for the algorithm. The one or more parameters values may determine the sequence of set IDs generated by the algorithm.

[0101] FIG. **4** shows an example of a set of tones **400** for a spread RU in a channel. In some aspects, a STA—such as a STA described with reference to FIGS. **1** and **2**—may change a set of non-contiguous tones assigned to an RU by shifting the tones in the non-contiguous tones by a shift value. An example of this tone **420** shifting is illustrated in FIG. **4**. It is to be appreciated that the number of tones **420** shown in FIG. **4** is small for ease of illustration and that the number of tones may be larger (for example, 242 tones for a 20 MHz channel). FIG. **4** shows an example of a non-contiguous set of tones assigned to an RU **410** and a set of tones not assigned to this RU **415** for time intervals **405**-*a*, **405**-*b*, and **405**-*c*. The set of tones **415** may or may not be assigned to one or more other RUs. It is to be appreciated that the number of tones **420** in the non-contiguous set of tones assigned to the RU **410** shown in FIG. **4** is small for ease of illustration, and that the number of tones **420** may be larger (for example, 26 tones, 52 tones, or any other number of tones).

[0102] In this example, the tones in the non-contiguous set of tones assigned to the RU **410** are shifted by a shift value for each time interval **405**. For example, the tones **420** may be shifted by two tone positions for each time interval **405**. However, it is to be appreciated that the shift may be larger (for example, 15 tone positions or any other number of tone positions). As shown in FIG. **4**, the shifting of the tones may be circular, in which a tone that reaches the top-most tone in the channel (for example, the bandwidth part of the channel for the RU) starts back at the bottom-most tone in the channel in frequency. Circular shifting helps ensure that the tones in the non-contiguous set of tones assigned to the RU **410** stay within the channel (for example, a 20 MHz channel, a 40 MHz channel, an 80 MHz channel, a 160 MHz channel, a 320 MHz channel, or any other channel) or within the bandwidth part of the channel allocated for the RU. It is to be appreciated that the circular shifting is not limited to the direction shown in FIG. **4** and that the tones may be shifted in the opposite direction.

[0103] The shift value may be constant (in other words, the tones in the non-contiguous set of tones assigned to the RU **410** may be shifted by the same amount for each time interval **405**). In this example, the AP may specify the shift value and transmit an indication of the shift value to the STA. The STA may shift the tones in the non-contiguous set of tones assigned to the RU **410** by the shift value indicated by the AP. For example, the tones of the non-contiguous set of tones assigned to the RU **410** for time interval **405**-*a* may be shifted up by a constant value (for example, two tones) in each subsequent time interval **405**, such that the non-contiguous set of tones assigned to the RU **410** for time interval **405**-*b* is different than the non-contiguous set of tones assigned to the RU **410** for time interval **405**-*a*. Similarly, the non-contiguous set of tones assigned to the RU **410** for time interval **405**-*c* may be different than the non-contiguous set of tones assigned to the RU **410** for time intervals **405**-*a*, **405**-*b*, or both (for example, based on the shift value).

[0104] In some aspects, the shift value may change over time (in other words, change for each time interval **405** or change for at least one time interval **405**). For example, the shift value may change according to a function. In some examples, the function may include a hashing function, such as a cyclic redundancy check (CRC) hashing function. When a STA receives a frame (for example, a trigger frame) from

the AP, the STA may input information from one or more fields in the frame into the hashing function to generate a hash value. The STA may then determine the shift value based on the hash value. For example, the shift value may equal the hash value or a portion of the hash value. In one specific example, the shift value may equal the N least significant bits of the hash value, in which N is an integer. The tones **420** in the non-contiguous set of tones assigned to the RU **410** may be shifted by the shift value. In this example, each STA may use the same hashing function to generate the shift value so that the tones **420** assigned to each RU allocated to the STAs are shifted by the same amount, avoiding overlapping tone assignment for multiple STAs.

[0105] In some examples, the STA may shift the tones in the non-contiguous set of tones assigned to the RU **410** each time the STA receives a trigger frame from the AP. In this example, each time the STA receives a trigger frame, the STA inputs information from one or more fields in the trigger frame into a hashing function to generate a hash value. The STA may determine the shift value based on the hash value, as described herein.

[0106] In the above example, the hashing function may provide a start index for the non-contiguous set of tones assigned to the RU **410**. For example, the shift value may determine a first tone **420** in the non-contiguous set of tones assigned to the RU **410** in frequency. In the example in which each tone **420** is identified by a respective tone index, the start index may correspond to the index of the first tone (that is, the tone having the lowest frequency or the tone having the highest frequency) in the non-contiguous set of tones assigned to the RU **410** for a given time interval **405**, which may be referred to as a transmission time interval (TTI).

[0107] In some aspects, the non-contiguous set of tones assigned to an RU **410** may be defined by a predetermined function that is applied by a STA. The function may include a hashing function that generates a hash value that is used to generate a shift value for shifting the assigned tones, as discussed above. In this example, the AP may transmit one or more parameter values to the STA, and the STA may input the one or more parameters values into the hashing function to generate the hash value. In this example, the one or more parameter values may be specific to the BSS of the AP so that STAs in different BSSs generate different hash values (and hence shift values) using the same hashing function. BSS specific parameters may include a BSS color, an address of the AP, any other parameter that is different for different BSSs, or any combination thereof. In some examples, the one or more parameter values may be specified in one or more fields in a trigger frame transmitted by the AP, as discussed above.

[0108] In some examples, the hash value generated by the hashing function may be used to shift the mapping of the RU. As discussed above, the RU may be mapped to a non-contiguous set of tones in the map using a set ID identifying the set of tones to which the RU is mapped. In this example, the set ID associated with the RU may be shifted based on the hash value, and the RU may be remapped to the set of tones identified by the shifted set ID. For example, if the RU is initially mapped to a set of tones identified by set ID 3 and the shift value is 4, then the RU may be remapped to the set of tones identified by set ID 7. In this example, the shift value may equal the hash value or a portion of the hash value, such as the N least significant bits of the hash function, in which N is an integer. It is to be appreciated that the present disclosure is not limited to the hashing function, and that another type of function may be used to determine the shift value.

[0109] In some aspects, each STA may store multiple functions that may be used to determine the non-contiguous set of tones assigned to an RU **410** for a given time interval **405**. For example, the multiple functions may be defined by a standard and/or assigned by the AP. In some aspects, the AP may select one or more of the multiple functions and transmit an indication of the selected function(s) to the STAs. Each STA receiving the indication may use an indicated function to determine the non-contiguous set of tones assigned to the RU **410**. The functions may include different functions, such as different hashing functions, for generating a shift value based on one or more parameter values.

[0110] In some aspects, the same RU may be assigned to two or more STAs concurrently. For example, an AP may assign the same RU to two STAs for concurrent uplink transmissions by assigning the same RU to the two STAs in a trigger frame. In this example, the user information fields for the two STAs may have the same RU assignment. The user field for each of the two STAs may include the AID of the respective STA.

[0111] FIG. **5**A shows an example set of tones **500** for an RU that is divided into multiple subsets of tones for multiple STAs. For example, the set of tones **500** may be divided into a first subset of tones **510** and a second subset of tones **515**. In these aspects, multiple STAs may share the same RU concurrently by using different subsets of the tones **520** in the set of tones **500** for the RU. In the example illustrated in FIG. **5**A, the RU includes a contiguous set of tones for ease of illustration, although it is to be appreciated that the set of tones of the RU may be non-contiguous. For example, any interspersed tones between tones **520** of the set of tones **500** that are not assigned to the RU may not be illustrated in FIG. **5**A for ease of illustration.

[0112] With reference to FIG. **5**A, the first subset of tones **510** may include the lower half of the set of tones **500** of the RU in frequency, and the second subset of tones **515** may include the upper half of the set of tones **500** of the RU in frequency. In other examples, other tone allocations may be supported, including allocating different numbers of tones **520** to different subsets of tones (for example, based on STA priority levels, data rates, or other parameters). In one specific example of a 26-tone RU with tone indices from 1 to 26, the first subset of tones **510** may include tones 1 to 13 and the second subset of tones **515** may include tones 14 to 26. In the example shown in FIG. **5**A, the first subset of tones **510** and the second subset of tones **515** are each contiguous within the set of tones **500**. In some examples the first subset of tone **510** may be adjacent to the second subset of tones **515** in frequency and may not be separated by spaces occupied by tones **520** in the channel.

[0113] FIG. **5**B shows an example set of tones **505** for an RU that is divided into multiple subsets of tones for multiple STAs. As configured, the set of tones **505** may alternate between the first subset of tones **510** and the second subset of tones **515**. For example, the first subset of tones **510** may include every other tone in the set of tones **505** of the RU, while the second subset of tones **515** may include the remaining tones of the set of tones **505**. Such a configuration may be referred to as an interleaved or "comb" allocation

pattern for the set of tones **505**. In the example shown in FIG. **5**B, the first subset of tones **510** and the second subset of tones **515** are non-contiguous. Also, the first subset of tones **510** and the second subset of tones **515** are interspersed. It is to be appreciated that the set of tones **505** of the RU may be non-contiguous. For example, any interspersed tones between tones **520** of the set of tones **505** that are not assigned to the RU may not be illustrated in FIG. **5**B for ease of illustration.

[0114] As discussed above, the AP may assign the same RU to two or more STAs by indicating the same RU to the STAs in the user information fields of a trigger frame. In this example, each STA may determine that the RU is shared by determining that the same RU is assigned in the user information fields for multiple STAs (in other words, the same RU value appears in the user information fields of multiple STAs). In this example, based on determining that the RU is shared, each STA may determine a subset of tones of the RU that is assigned to the respective STA. In some implementations, a STA may determine a subset of tones based on the order of the user information fields for the STAs in the trigger frame that share the same RU indication. For example, the STA with the user information field that appears first in the trigger frame may be assigned the first subset of tones **510**, and the STA with the user information field that appears later in the trigger frame may be assigned the second subset of tones **515**.

[0115] In response to the trigger frame, the STA assigned to the first subset of tones **510** may transmit uplink data via the first subset of tones **510**, and the STA assigned to the second subset of tones **515** may transmit uplink data via the second subset of tones **515**. The AP may receive uplink data from the STA assigned to the first subset of tones **510** via the first subset of tones **510** and may receive uplink data from the STA assigned to the second subset of tones **515** via the second subset of tones **515**.

[0116] In the examples shown in FIGS. **5**A and **5**B, the set of tones of the RU may be contiguous for ease of illustration. It is to be appreciated that the set of tones of the RU may be non-contiguous. If non-contiguous, a STA sharing the RU with another STA may determine the non-contiguous set of tones for the RU using any of the methods discussed herein. The non-contiguous set of tones for the RU may change with time (for example, according to a pattern), as discussed herein. The STA may additionally determine the subset of the non-contiguous set of tones assigned to the STA. Based on determining the set of tones for the RU and the subset of tones within the set of tones, the STA may determine the specific tones **520** assigned to that STA. For example, if a STA is assigned a subset of tones **510** including the lower half of the tones in the non-contiguous set of tones **500** in frequency, then the STA may use the lower half of the tones for its uplink transmission(s). If a STA is assigned a subset of tones **515** including the upper half of the tones in the non-contiguous set of tones **500** in frequency, then the STA may use the upper half of the tones for its uplink transmission(s).

[0117] In some examples, the first subset of tones **510** and/or the second subset of tones **515** may change dynamically. For example, a device may change the first subset of tones **510** by shifting the tones in the first subset by a shift value and may change the second subset of tones **515** by shifting the tones in the second subset by a shift value (for example, the same shift value). In this example, the shifting may be circular and stay within the set of tones of the shared RU. The shift value may be constant. Alternatively, the shift value may change according to a function, such as a hashing function. For the example of a hashing function, the hashing function may generate a hash value based on one or more parameter values, and the shift value may be generated based on the hash value, as discussed above. The one or more parameter values may correspond to one or more fields in a frame (for example, a trigger frame) transmitted by the AP. The AP may specify the time interval between changes in the first and/or second subsets by generating an indication of the time interval and transmitting the indication to one or more STAs. In this example, a STA may change an assigned subset of tones for each time interval or for at least one time interval.

[0118] In some aspects, the same STA may be assigned different groups of tones and through collectivity may use a larger set of tones. For example, the STA may have 13 tones from each of two groups, and collectively have 26 tones from the two groups. These different groups may be different RUs or different subsets of tones within an RU.

[0119] As described herein, RU spreading in frequency can be used to mitigate narrow band interference. If the tones of an RU are spread in frequency, the chance of all or most tones getting hit by narrow band interference is significantly reduced. Similarly, spreading a subset of tones in an RU for a particular STA may mitigate narrow band interference.

[0120] In some aspects, an AP may enable RU spreading based on the level of interference on the channel or in the tones of the RU. For example, the AP and one or more STAs may support the use of contiguous RUs and non-contiguous RUs. In this example, each STA may store a map for mapping RU assignments to contiguous sets of tones and a map for mapping RU assignments to non-contiguous sets of tones. In this example, the AP and the one or more STAs may initially use contiguous RUs for communication (for example, according to a standard). In this example, the one or more STAs may use the map for mapping RU assignments to contiguous sets of tones.

[0121] The AP may subsequently enable the use of non-contiguous RUs (in other words, enable RU spreading) based on the level of interference. For example, a STA experiencing narrow band interference may transmit a request to the AP requesting RU spreading (for example, requesting assignment of non-contiguous RUs) and/or transmit a message to the AP indicating that the STA is experiencing interference. In response, the AP may assign non-contiguous RUs to the STA (for example, in trigger frames and/or downlink transmissions). The AP may also assign non-contiguous RUs to one or more other STAs (for example, in trigger frames and/or downlink transmissions). In this example, the AP may transmit a message to the STAs indicating that the AP has enabled RU spreading. In response, the STAs may start using the map that maps RU assignments to non-contiguous sets of tones.

[0122] A STA may determine whether it is experiencing interference (for example, significant interference according to some static or dynamic interference threshold) using various methods. For example, the STA may determine that it is experiencing interference after a specific number of failed attempts to close a link between the STA and the AP. In this example, one failed attempt to close the link may occur when the STA transmits a packet to the AP and fails

to receive an acknowledgement of the packet from the AP. In some examples, the STA may receive a signal, such as a pilot signal, from the AP and measure the signal-to-noise ratio (SNR), the RSSI, an error rate of the signal (for example, a bit error rate, a frame error rate, or any other error rate), and/or another parameter of the signal. In some of these examples, the STA may determine that it is experiencing interference if the SNR is below a threshold, if the RSSI is below a threshold, if the error rate is above a threshold, or if some combination of these or other interference determination methods indicate a significant level of interference at the STA. Based on the determination that the STA is experiencing interference, the STA may transmit a request to the AP requesting RU spreading (for example, requesting assignment of non-contiguous RUs) and/or transmit a message to the AP indicating that the STA is experiencing interference. In response, the AP may enable RU spreading, as discussed above.

[0123] In some aspects, a first AP and/or STA may signal another AP and/or STA in a neighboring BSS to enable RU spreading in the neighboring BSS to help the first AP and/or STA transmit reliably. For example, the first AP and/or STA may signal the second AP and/or STA in the neighboring BSS to enable RU spreading, such that devices in the neighboring BSS use non-contiguous sets of tones for RUs based on the first AP and/or STA experiencing interference. A bit in the preamble of an in-BSS PPDU or a field in another element may be used to signal the second AP and/or STA in the neighboring BSS to enable RU spreading. The neighboring BSS may be an overlapping BSS (OBSS).

[0124] FIG. **6** shows an example of a frequency and time spreading configuration **600** for an RU. In the frequency and time spreading configuration **600**, an RU **610** may be assigned to a STA, such as a STA described with reference to FIGS. **1** and **2**. As illustrated, RU **610**-*a* is assigned to the STA identified by AID **605**-*a*, RU **610**-*b* is assigned to the STA identified by AID **605**-*b*, RU **610**-*c* is assigned to the STA identified by AID **605**-*c*, RU **610**-*d* is assigned to the STA identified by AID **605**-*d*, RU **610**-*e* is assigned to the STA identified by AID **605**-*e*. In some examples, RU spreading may be extended in both the frequency and time domain. As illustrated in FIG. **6**, the assigned resources for each RU **610** may be non-contiguous in frequency, in time, or both. As described herein, non-contiguous may refer to each resource being non-contiguous or at least one set of resources being non-contiguous with another set of resources.

[0125] A device, such as an AP or STA, may spread an RU **610** in time by changing the non-contiguous set of tones for the RU **610** in time. In the example shown in FIG. **6**, the non-contiguous set of tones for each RU **610** may change for each one of multiple TTIs **620**, such as TTI **620**-*a*, TTI **620**-*b*, and TTI **620**-*c*. Although three TTIs **620** are shown in FIG. **6** for ease of illustration, it is to be appreciated that there may be a larger number of TTIs **620** used for spreading one or more RUs **610**. In this example, the non-contiguous set of tones for each RU may be changed using any of the methods discussed above. For example, the non-contiguous set of tones for an RU may be changed by shifting the tones **615** in the non-contiguous set of tones by a shift value for each TTI **620**. The shift value may be constant or change for each TTI **620**, as discussed above. In some examples, a map mapping RUs **610** to sets of tones may be changed for each TTI **620** based on a pattern and/or function, as discussed above. The RU **610** time and/or frequency mapping may be standardized, downloaded, periodic, or derived based on a function, as described herein.

[0126] In some examples, the AP may transmit a message to the STAs indicating the time duration of each TTI **620**. Each STA receiving the message may change the non-contiguous set of tones for its assigned RU **610** for each TTI **620** according to the time duration indicated by the AP. The AP may transmit the message in a trigger frame, a management frame, a beacon, or any other message or signal.

[0127] In some examples, the time duration of each TTI **620** may be less than the transmission length of a packet transmitted by a STA. For example, a number of TTIs, N, may fit into the transmission length, in which N is an integer. In this example, the STA may change the non-contiguous set of tones for its assigned RU **610** N times during the uplink transmission of a packet. The same may apply to a downlink transmission from the AP to the STA.

[0128] In some aspects, redundancy may be added in the time domain to improve robustness. In some examples, aggregate MAC protocol data units (A-MPDUs) in a high efficiency (HE) (for example, downlink MU transmission or transport block (TB)) PPDU may be padded to meet a PPDU length threshold (for example, a maximum or minimum PPDU length threshold). For example, when a STA transmits an HE TB PPDU to the AP, the AP may specify the transmission length of the PPDU. If the STA does not use the entire transmission length to transmit its data, then the STA may pad the PPDU to reach the transmission length. The padding carries no useful information. In some examples, instead of padding, the contents of the PPDU may be encoded to carry redundant information to meet the length threshold. The contents may be encoded using forward error correction (FEC) (for example, fountain codes).

[0129] For example, a STA transmitting data to the AP in an uplink transmission may input the data to an encoder to generate encoded data carrying redundant information. In this example, the length of the resulting encoded data is greater than the length of the input data due to the encoded data carrying redundant information. In this example, the length of the encoded data may be selected to meet a length threshold (for example, a maximum threshold length) of a PPDU used to transmit the data. In this example, the STA may transmit the PPDU over multiple TTIs **620**, and the encoded data may carry enough redundant information to enable the AP to recover the input data using less than all of the TTIs **620**. This may support robust uplink transmissions, as the AP may determine the uplink data despite a narrow time interference affecting one or more TTIs **620**.

[0130] In some aspects, redundancy may be added in the frequency domain to improve robustness. For example, additional tones **615** may be used to carry redundant information which can be used to help recover original content. For example, a STA transmitting data to the AP in an uplink transmission may transmit redundant information on one or more tones **615** in the set of tones for the RU **610** assigned to the STA. This may enable the AP to recover the original data using less than all of the tones **615**. This may support robust uplink transmissions, as the AP may determine the uplink data despite narrow band interference affecting one or more tones **615**.

[0131] In some aspects, an AP and/or STA can advertise a capability to support one or more schemes for spreading and redundancy via an element, field, or combination of fields.

For example, an AP or STA may advertise its capability to support frequency spreading, time spreading, or both. An AP or STA may also advertise its encoding for mapping if different encoding schemes are available. An AP or STA may also advertise its capability to add redundancy in time (for example, padding replaced with redundant information), add redundancy in frequency (for example, some tones **615** used to carry redundant information), or both. An AP or STA can also advertise the redundancy scheme it is using if multiple redundancy schemes are supported. Any combination of the above advertising may be performed by a device, such as an AP and/or STA, by transmitting a message indicating one or more supported capabilities of the device.

[0132] Additionally or alternatively, there may be a bit which turns on or off one or more capabilities based on particular conditions. For example, redundancy may be enabled if channel quality degrades beyond a specific threshold. In some examples, RU spreading may be enabled if a sub-channel is experiencing occasional or consistent interference.

[0133] FIG. **7** shows an example of a wireless communications system **700**. The wireless communications system **700** may support RU spreading, including a configuration for distributed RUs, in accordance with aspects of the present disclosure. The wireless communications system **700** may be an example of a WLAN **100** and may include an AP **725** and a STA **730**, which may be examples of the corresponding devices described with reference to FIGS. **1** and **2**. The AP **725** may provide network coverage for a coverage area **735**. The AP **725** and the STA **730** may communicate over communication link **705** (for example, transmitting data and/or pilot signals on the uplink or the downlink). The AP **725** and STA **730** may utilize distributed RUs **710** to improve the frequency diversity gain and the power advantage for transmissions.

[0134] Wireless communications system **700** (for example, a Wi-Fi system or WLAN) may use logical RUs as building blocks for a distributed RU **710**. In some implementations, these logical RUs may span or contain **26** tones (in other words, subcarriers). In these implementations, a logical RU may be referred to as a logic RU26. A transmitting device (for example, AP **725** or STA **730**) may spread the tones for a logic RU over a particular bandwidth in order to obtain a level of power advantage for the transmission. That is, the logic RU may correspond to a narrow band, and the transmitting device may spread the logic RU over a wider frequency domain. For example, an AP **725** may distribute the tones for the distributed RU **710** across a channel bandwidth **715** for transmission to a STA **730**. In this example, the aggregate bandwidth for the tones is less than the channel bandwidth **715**. In some examples, the size of the channel bandwidth **715** for distribution may be based on a power advantage threshold, referred to as the full power advantage. This full power advantage may correspond to transmitting with a maximum transmit power or peak power, while still remaining below a PSD limit for the system. The bandwidth supporting the full power advantage may be calculated using the following equation:

$$\text{Full Power } Adv.\ BW = \frac{\text{Peak Power}}{PSD\ \text{Limit}} = 10\left[\frac{24\ dBm - 11\ dBm/\text{MHz}}{10}\right] \approx 20\ \text{MHz}, \quad (1)$$

in which the peak power is 24 decibel-milliwatts (dBm) and the PSD limit is 11 dBm per megahertz (MHz). As indicated by this equation, to transmit using the peak power while supporting the PSD limit, a device may spread the transmission over a bandwidth of approximately 20 MHz. This peak power, PSD limit, and bandwidth are given as examples, and other values may be used for distributing RUs.

[0135] In some implementations, a transmitting device may use an RU size greater than the logic RU size (for example, RU26) or a threshold RU size (for example, RU106). Additionally or alternatively, the transmitting device may map the distributed RU **710** over a channel bandwidth **715** greater than the bandwidth supporting the full power advantage (for example, 20 MHz). In some examples, the transmission may experience a reduced power gain or no power gain based on the wider bandwidth or RU size, as well as a reduced frequency diversity gain. However, any amount of RU distribution for a transmission may harvest frequency diversity gain and transmit power advantage. These advantages may be especially significant for uplink transmissions (for example, data and/or pilot transmissions from the STA **730** to the AP **725**).

[0136] A minimum mapping distance (for example, to achieve the full power advantage) may depend on the logic RU size for the channel bandwidth **715**. For example, to support RU26 and 1 tone/MHz for evenly spreading tones, the minimum corresponding channel bandwidth **715** may be approximately 26 MHz.

[0137] Described below is one possible distributed RU **710** design utilizing tone sets **720** for efficient distribution across a channel bandwidth **715**. The description focuses on an RU26 containing 24 data tones and 2 pilot tones spread over RU242 (for example, a channel bandwidth **715** of approximately 20 MHz). However, other RUs, channel bandwidths **715**, and distribution designs are possible and supported by wireless communications system **700** as described herein.

[0138] The distributed RU **710** may contain a number of tones with an aggregate bandwidth (for example, 26 tones) that is less than the channel bandwidth **715** (for example, 242 tones). The transmitting device may map these 26 RU tones to tones within the channel bandwidth **715**. A majority of the tones (for example, at least 90% of the tones) may be mapped to distributed pairs of adjacent tones in the channel bandwidth **715**. That is, the channel bandwidth **715** may contain groups of tones with 2 tones in each group, and each RU may correspond to one or more of these groups. In some examples, these distributed pairs of adjacent tones may be used as data tones for the distributed RU **710**. Additionally, the distributed RU **710** may contain pilot tones. These pilot tones may be non-contiguous or may be separated by at least a threshold number of tones. At least two pilot tones for each RU may be mapped to tones far apart in the channel bandwidth **715** (for example, the pilot tones are separated by at least 30% of the channel bandwidth **715**, at least 50% of the channel bandwidth **715**, or some other separation threshold). In some examples, a device may determine the set of tones allocated for the distributed RU **710** and may remap which tones within the allocated set of tones are data tones and which tones are pilot tones.

[0139] One example of a distribution design for RUs utilizes tone sets **720**. In some implementations, these tone

sets **720** may correspond to tone sets for null data packet (NDP) short feedback (see Table 1).

TABLE 1

Example Tone Sets for RU Distribution

Tone Sets	b = 1	b = 0
1	−113, −77, −41, 6, 42, 78	−112, −76, −40, 7, 43, 79
2	−111, −75, −39, 8, 44, 80	−110, −74, −38, 9, 45, 81
3	−109, −73, −37, 10, 46, 82	−108, −72, −36, 11, 47, 83
4	−107, −71, −35, 12, 48, 84	−106, −70, −34, 13, 49, 85
5	−105, −69, −33, 14, 50, 86	−104, −68, −32, 15, 51, 87
6	−103, −67, −31, 16, 52, 88	−102, −66, −30, 17, 53, 89
7	−101, −65, −29, 18, 54, 90	−100, −64, −28, 19, 55, 91
8	−99, −63, −27, 20, 56, 92	−98, −62, −26, 21, 57, 93
9	−97, −61, −25, 22, 58, 94	−96, −60, −24, 23, 59, 95
10	−95, −59, −23, 24, 60, 96	−94, −58, −22, 25, 61, 97
11	−93, −57, −21, 26, 62, 98	−92, −56, −20, 27, 63, 99
12	−91, −55, −19, 28, 64, 100	−90, −54, −18, 29, 65, 101
13	−89, −53, −17, 30, 66, 102	−88, −52, −16, 31, 67, 103
14	−87, −51, −15, 32, 68, 104	−86, −50, −14, 33, 69, 105
15	−85, −49, −13, 34, 70, 106	−84, −48, −12, 35, 71, 107
16	−83, −47, −11, 36, 72, 108	−82, −46, −10, 37, 73, 109
17	−81, −45, −9, 38, 74, 110	−80, −44, −8, 39, 75, 111
18	−79, −43, −7, 40, 76, 112	−78, −42, −6, 41, 77, 113

[0140] For a channel bandwidth **715** spanning RU242, the system may support 18 tone sets **720**, in which each tone set **720** includes 12 distributed tones. The tones included in at least one of the tone sets **720** may be used as data tones. For example, based on the tone sets **720** presented in Table 1, the data tone indices may include: [−113:−6, 6:113]. In this example, the bandwidth spanning **242** tones may contain **216** tones in a data portion. As each tone set **720** contains 12 tones, a device may use two tone sets **720** to form 24 data tones for one distributed RU **710** (for example, an RU26). This may allow the system to support nine RU26 distributed in the channel bandwidth **715**. For example, with reference to Table 1, the devices may support a first RU26 containing the tones associated with tone sets 1 and 10, a second RU26 containing the tones associated with tone sets 2 and 11, and so on, up to a ninth RU26 containing the tones associated tone sets 9 and 18. For the distributed RU **710**, the AP **725** or STA **730** may transmit over data tones for RU26 corresponding to tone sets **720**-*a* and **720**-*b*. If tone set **720**-*a* corresponds to tone set 1 of Table 1 and tone set **720**-*b* corresponds to tone set 10 of Table 1, the AP **725** or STA **730** may transmit data in 24 data tones with tone indices −113, −112, −95, −94, −77, −76, −59, −58, −41, −40, −23, −22, 6, 7, 24, 25, 42, 43, 60, 61, 78, 79, 96, and 97. These 24 data tones are made up of 12 pairs of adjacent tones in the channel bandwidth **715** (for example, spread across the frequency domain).

[0141] The transmitting device may additionally transmit pilot signals in multiple pilot tones in addition to the data tones. The device may allocate these pilot tones to available tones in the channel bandwidth **715** (for example, tones not occupied by data tones for any of the tone sets **720**). The pilot tones may be mapped towards the edges of the channel bandwidth **715**, towards the center of the channel bandwidth **715**, or split between the two. In some implementations, the locations for the pilot tones may be based on a number of extra edge tones or DC tones to maintain. For example, to maintain a reservation of 7 DC tones for orthogonal frequency division multiple access (OFDMA) in the center of the channel bandwidth **715** (for example, DC tones [−3:3]), the device may allocate the pilot tones (for example, 18 pilot tones, two each for 9 RUs) such that the pilot tone indices include: [−120:−114, −5:−4, 4:5, 114:120]. This may also leave some unused tones on each edge of the channel bandwidth **715** for interference cancelation. This may leave 8 edge tones on the left-hand side of the channel bandwidth **715** and 7 edge tones on the right-hand side.

[0142] In some implementations, the above allocations may be shifted in frequency. For example, to handle edge tone thresholds or tone availability for some bandwidths (for example, 40 or 80 MHz), a device may shift the data and pilot tones by a number of tones (for example, 4 tones for RU26 or 6 tones for RU106) to align with the edges of the specific bandwidth. This may involve shifting tones on either side of the channel bandwidth **715** towards the DC tones in the center of the channel bandwidth **715**. In some examples, the device may use a regular 128 or 384 tone shift for the transmission.

[0143] One example of a specific pilot tone allocation rule may involve sequentially allocating one pilot to a negative tone index and one pilot to a positive tone index to form a set of two pilot tones for a distributed RU **710**. For example, if the pilot portion of the channel bandwidth **715** spans [−120:−114, −5:−4, 4:5, 114:120], a first set of pilot tones may contain pilot tone index −120 and pilot tone index 4 (in other words, the first available negative pilot tone and the first available positive pilot tone in sequence). Using such a rule may ensure that the two pilot tones for a logic RU26 are far apart (for example, around 50% of the bandwidth from one another). Using this pilot tone allocation rule and the tone set **720** allocation design described above, the channel bandwidth **715** may support nine logic RUs as defined below in Table 2:

TABLE 2

Example Tone Distribution for Logic RU26 in Option 1

	Physical Tone Indices/Tone Sets belonging to corresponding logic RU26 Logic RU26 Index								
	1	2	3	4	5	6	7	8	9
Data Tones (Tone Sets)	1, 10	2, 11	3, 12	4, 13	5, 14	6, 15	7, 16	8, 17	9, 18
Pilot Tones (Tone Indices)	−120, 4	−119, 5	−118, 114	−117, 115	−116, 116	−115, 117	−114, 118	−5, 119	−4, 120

Table 2 describes one possible data and pilot tone allocation for RU distribution. Many other tone allocations are possible, and each tone allocation may distribute a set of tones across a channel bandwidth **715** that is wider than an

aggregate bandwidth of the set of tones. A majority of tones of the set of tones may be allocated to distributed pairs of adjacent tones.

[0144] Additionally or alternatively, how the RUs are distributed may be based on other factors. For example, the type of data or format of the data to be transmitted in the distributed RU **710** may determine the allocation of tones or the data mapping for the distributed RU **710**. Uncompressed long training fields (LTFs) such as 4× LTF may transmit data in each data tone of the sets of data tones. However, compressed LTFs (for example, LTFs with a tone group factor, Ng, greater than 1, such as 1× or 2× LTFs) may transmit one value over a set of tones. For example, 2× LTF may transmit one value over a set of two tones. In these implementations, the transmitting device may support 2× LTF by transmitting one data tone in each pair of adjacent data tones. The transmitting device may additionally transmit pilot signals on all distributed pilot tones. In some other implementations, the devices may not use compressed LTFs, and may limit transmissions to uncompressed 4× LTFs. For short training fields (STFs), the wireless communications system **700** may implement an existing 20 MHz STF for any devices in each 20 MHz channel bandwidth **715** in OFDMA. For example, for trigger-based STFs, a transmitting device may transmit data in every eighth data tone, while for non-trigger-based STFs, the transmitting device may transmit data in every sixteenth data tone.

[0145] In some implementations, a device allocating resources for distributed RUs **710** in the channel bandwidth **715** may perform interleaving of the resources using existing interleaving methods for non-distributed transmissions. However, in some other implementations, the distribution procedure may provide sufficient frequency diversity to the transmissions, and the device may not perform interleaving.

[0146] Additionally or alternatively, a device may utilize RUs of different sizes in the channel bandwidth **715**. The device may unify tone mapping over the channel bandwidth **715** (for example, including pilot tones) despite the mixed RU sizes. Also, when allocating distributed RUs to devices (for example, one or more STAs), the ordering of the devices may not be important due to the distribution of the RUs.

[0147] FIG. **8** shows an example of a channel bandwidth configuration **800**. The channel bandwidth configuration **800** may define possible tone allocations for a channel bandwidth **805**, which may be an example of a channel bandwidth **715** described with reference to FIG. **7**. The channel bandwidth configuration **800** may support transmission of data and pilot tones **815** distributed across the channel bandwidth **805** for a number of RUs.

[0148] The channel bandwidth **805** may include a set of useful tones (for example, tones carrying information, such as data or pilot signals) and a set of unused or extra tones (for example, tones not carrying information). These unused tones may act as a buffer or may be used for interference cancelation. Data and pilot tones **815**-*a* and **815**-*b* may be examples of useful tones, and edge tones **820**-*a* and **820**-*b* and DC tones **825** may be examples of unused tones. In some implementations, edge tones **820**-*a* may be referred to as leading unused edge tones and edge tones **820**-*b* may be referred to as following or trailing unused edge tones.

[0149] The DC tones **825** may span a number of tones in the center of the channel bandwidth **805**. The channel bandwidth **805** may include two half bandwidths, a negative half bandwidth **810**-*a* and a positive half bandwidth **810**-*b*. In each half bandwidth **810**, the system or devices may allocate a set of data and pilot tones **815** bordered by unused tones (for example, edge tones **820** and a portion of the DC tones **825**). The data and pilot tones **815** may include tones allocated for different distributed RUs. For example, the majority of the tones in the data and pilot tones **815** may be examples of paired adjacent tones. In some examples, the data tones may be paired adjacent tones, while the pilot tones may not be. Example mappings of the data tones and pilot tones within the sets of data and pilot tones **815** are discussed below, with reference to FIGS. **9**A, **9**B, and **9**C.

[0150] FIGS. **9**A, **9**B, and **9**C show examples of tone mapping configurations **900**. The tone mapping configurations **900** support RU spreading, including distributing RUs across channel bandwidths **905** in accordance with aspects of the present disclosure. In FIG. **9**A, tone mapping configuration **900**-*a* illustrates a first option for data and pilot tone mapping for a distributed RU. The channel bandwidth **905**-*a* may include unused tones **920** (for example, including unused edge tones **920**-*a* and **920**-*c*, and unused DC tones **920**-*b*) and useful tones. These useful tones may include data portions **910** and pilot portions **915**. These data portions **910** and pilot portions **915** may include allocated tones for a number of different RUs. As illustrated, data tones **930** and pilot tones **935** may be allocated for a first distributed RU. For example, the distributed RU may be an example of an RU26 and may include 24 data tones **930** and 2 pilot tones **935**. These pilot tones **935** may be mapped to tones that are far apart in the channel bandwidth **905**-*a* (for example, at least 30% of the bandwidth apart). The distributed RU illustrated in FIG. **9**A may be an example of logic RU26 1 as defined with respect to Table 2. In this first option, the pilot tones **935** may be mapped to either edge of the data portions **910** in each half bandwidth of the channel bandwidth **905**-*a*. For example, each logic RU may include at least one pilot tone **935** in either the leading pilot portion **915**-*a* or trailing pilot portion **915**-*b* for the first data portion **910**-*a* and at least one other pilot tone **935** in either the leading pilot portion **915**-*c* or trailing pilot portion **915**-*d* for the second data portion **910**-*b*.

[0151] In FIG. **9**B, tone mapping configuration **900**-*b* illustrates a second option for data and pilot tone mapping for a distributed RU. In tone mapping configuration **900**-*b*, as opposed to tone mapping configuration **900**-*a*, the systems or devices may shift the data portions **910** towards the edges of each half bandwidth (for example, towards the edge tones and DC tones), and the pilot portions **915** may be mapped to the middle of each half bandwidth. For example, as with tone mapping configuration **900**-*a*, the channel bandwidth **905**-*b* for tone mapping configuration **900**-*b* may include the same or similar unused tones **920** (for example, including unused edge tones **920**-*d* and **920**-*f*, and unused DC tones **920**-*e*). However, in this second option, a pilot portion **915** may be centered in each half bandwidth, and the data portions **910** may surround these pilot portions **915**. For example, for distributing logic RUs with 26 tones (for example, 24 data tones and 2 pilot tones) in a 20 MHz bandwidth, the channel bandwidth **905**-*b* may support 9 distributed logic RUs. Each half bandwidth in the channel bandwidth **905**-*b* may include 9 pilot tones **935** centered in that half bandwidth, and each logic RU may have one pilot tone **935** in each of the half bandwidths. In these examples, the data portions **910** may be allocated to the remaining useful tones in the channel bandwidth **905**-*b*. Example data

tones **930** and pilot tones **935** corresponding to each distributed RU supported by the channel bandwidth **905**-*b* are presented in Table 3 below:

TABLE 3

Example Tone Distribution for Logic RU26 in Option 2

Logic RU26 Index	Mapped Tone Index (Pilot Tones Italicized)
1	−120, −119; −102, −101; −84, −83; *−66*; −57, −56; −39, −38; −21, −20; 4, 5; 22, 23; 40, 41; *58*; 67, 68; 85, 86; 103, 104
2	−118, −117; −100, −99; −82, −81; *−65*; −55, −54; −37, −36; −19, −18; 6, 7; 24, 25; 42, 43; *59*; 69, 70; 87, 88; 105, 106
3	−116, −115; −98, −97; −80, −79; *−64*; −53, −52; −35, −34; −17, −16; 8, 9; 26, 27; 44, 45; *60*; 71, 72; 89, 90; 107, 108
4	−114, −113; −96, −95; −78, −77; *−63*; −51, −50; −33, −32; −15, −14; 10, 11; 28, 29; 46, 47; *61*; 73, 74; 91, 92; 109, 110
5	−112, −111; −94, −93; −76, −75; *−62*; −49, −48; −31, −30; −13, −12; 12, 13; 30, 31; 48, 49; *62*; 75, 76; 93, 94; 111, 112
6	−110, −109; −92, −91; −74, −73; *−61*; −47, −46; −29, −28; −11, −10; 14, 15; 32, 33; 50, 51; *63*; 77, 78; 95, 96; 113, 114
7	−108, −107; −90, −89; −72, −71; *−60*; −45, −44; −27, −26; −9, −8; 16, 17; 34, 35; 52, 53; *64*; 79, 80; 97, 98; 115, 116
8	−106, −105; −88, −87; −70, −69; *−59*; −43, −42; −25, −24; −7, −6; 18, 19; 36, 37; 54, 55; *65*; 81, 82; 99, 100; 117, 118
9	−104, −103; −86, −85; −68, −67; *−58*; −41, −40; −23, −22; −5, −4; 20, 21; 38, 39; 56, 57; *66*; 83, 84; 101, 102; 119, 120

[0152] In this second tone allocation option, a first data portion **910**-*c* may border the leading edge tones **920**-*d* and a second data portion **910**-*d* may border the DC tones **920**-*e*, with a contiguous first pilot portion **915**-*e* located in the tones between these data portions **910**-*c* and **910**-*d*. Similarly, in the other half bandwidth (for example, the positive half bandwidth), a third data portion **910**-*e* may border the DC tones **920**-*e* and a fourth data portion **910**-*f* may border the trailing edge tones **920**-*f*, with the second pilot portion **915**-*f* inserted between these data portions **910**-*e* and **910**-*f*. This tone mapping configuration **900**-*b* may support even spacing for separation of the pilot tones **935** composing a same RU26.

[0153] In the tone mapping configuration **900**-*b*, extra tones may be allocated to the unused tones **920** (for example, two tones on each side of the edge tones **920**-*d* and **920**-*f*, and two tones on each side of the DC tones **920**-*e*). Accordingly, the useful tones may span tone indices [−120,−4]∪[4,120], supporting 234 useful tones, with tone indices [−66,−58]∪[58,66] designated as pilot tones. Each RU26 may contain subgroups of data tones, in which each subgroup includes two contiguous tones (for example, tone indices −120 and −119 may form a first data subgroup for logic RU 1). These pairs of adjacent or contiguous tones may result in a smoothing gain for channel estimation performed on the channel bandwidth **905**-*b*. As the pilot tones **935** for the RUs are scattered (for example, spread or distributed) in the middle of each half bandwidth (for example, for improved frequency diversity of the pilots), a receiving device may perform channel estimation independently on the pilot signals and without a corresponding interpolation process. For example, an AP or STA may perform separate channel estimation due to the separation of each pair of data tones **930** for a given RU from the pilot tones **935** for that RU.

[0154] In FIG. **9**C, tone mapping configuration **900**-*c* illustrates a third option for data and pilot tone mapping for a distributed RU. In tone mapping configuration **900**-*c*, pilot tones **935** for each RU connect a pair of data tones **930** for that RU. As with tone mapping configuration **900**-*b*, tone mapping configuration **900**-*c* includes extra tones allocated to unused tones **920** (for example, two tones on each side of the edge tones **920**-*g* and **920**-*i*, and two tones on each side of the DC tones **920**-*h*). Accordingly, the useful tones may span tone indices [−120,−4]∪[4,120], supporting 234 useful tones. Each RU26 may contain subgroups of data tones. A majority of these subgroups may include two contiguous data tones **930** (for example, to support smoothing gain for channel estimation). However, at least one subgroup in each half bandwidth may include a pilot tone **935** connecting the data tones **930** in the subgroup. In one specific example, a pilot tone **935** may be mapped to the middle of the third subgroup of data tones **930** from the edge in each half bandwidth. This may result in improved frequency diversity, and a receiving device may utilize interpolation from the received data tones to the pilot tone based on the pilot tones **935** being adjacent to data tones **930** in the distributed RU. In these examples, the receiving device may not perform an independent channel estimation procedure on pilot tones.

[0155] FIG. **9**C illustrates one example of a connected pilot configuration. For example, the channel bandwidth **905**-*c* may include the same or similar unused tones **920** (for example, including unused edge tones **920**-*g* and **920**-*i*, and unused DC tones **920**-*h*) as tone mapping configurations **900**-*a* and **900**-*b*. The channel bandwidth **905**-*c* may include allocated data portions **910** but may not contain contiguous pilot portions. Instead, the channel bandwidth **905**-*c* may include data-pilot connection portions **925**-*a* and **925**-*b*. Each of these portions may include a data subgroup containing a pilot tone **935** bordered on either side by a data tone **930** for each logic RU. For example, for distributed logic RUs with 26 tones (for example, 24 data tones and 2 pilot tones) in a 20 MHz bandwidth, the data-pilot connection portion **925**-*a* may include nine sets of subgroups—one for each supported logic RU—in which each subgroup contains a data tone, a pilot tone, and another data tone in sequence. The data-pilot connection portion **925**-*b* may include a similar configuration of connected data and pilot tones, such that each logic RU contains a pilot tone **935** connected to data tones **930** for that logic RU in each half bandwidth of the channel bandwidth **905**-*c*. The other data subgroups (for example, composing data portions **910**-*g*, **910**-*h*, **910**-*i*, and **910**-*j*) may contain paired adjacent data tones **930** for the distributed RUs. Table 4 defines one specific tone index mapping for connected pilots, in accordance with tone mapping configuration **900**-*c*.

TABLE 4

Example Tone Distribution for Logic RU26 in Option 3

Logic RU26 Index	Mapped Tone Index (Pilot Tones Italicized)
1	−120, −119; −102, −101; −84, *−83*, −82; −57, −56; −39, −38; −21, −20; 4, 5; 22, 23; 40, 41; 58, *59*, 60; 85, 86; 103, 104
2	−118, −117; −100, −99; −81, *−80*, −79; −55, −54; −37, −36; −19, −18; 6, 7; 24, 25; 42, 43; 61, *62*, 63; 87, 88; 105, 106

TABLE 4-continued

Example Tone Distribution for Logic RU26 in Option 3

Logic RU26 Index	Mapped Tone Index (Pilot Tones Italicized)
3	−116, −115; −98, −97; −78, *−77*, −76; −53, −52; −35, −34; −17, −16; 8, 9; 26, 27; 44, 45; 64, *65*, 66; 89, 90; 107, 108
4	−114, −113; −96, −95; −75, *−74*, −73; −51, −50; −33, −32; −15, −14; 10, 11; 28, 29; 46, 47; 67, *68*, 69; 91, 92; 109, 110
5	−112, −111; −94, −93; −72, *−71*, −70; −49, −48; −31, −30; −13, −12; 12, 13; 30, 31; 48, 49; 70, *71*, 72; 93, 94; 111, 112
6	−110, −109; −92, −91; −69, *−68*, −67; −47, −46; −29, −28; −11, −10; 14, 15; 32, 33; 50, 51; 73, *74*, 75; 95, 96; 113, 114
7	−108, −107; −90, −89; −66, *−65*, −64; −45, −44; −27, −26; −9, −8; 16, 17; 34, 35; 52, 53; 76, *77*, 78; 97, 98; 115, 116
8	−106, −105; −88, −87; −63, *−62*, −61; −43, −42; −25, −24; −7, −6; 18, 19; 36, 37; 54, 55; 79, *80*, 81; 99, 100; 117, 118
9	−104, −103; −86, −85; −60, *−59*, −58; −41, −40; −23, −22; −5, −4; 20, 21; 38, 39; 56, 57; 82, *83*, 84; 101, 102; 119, 120

[0156] For uplink transmissions, the system may allocate pilot tones **935** such that pilot signals for each user (for example, each STA) are evenly spread over the channel bandwidth **905**. For downlink or single-user transmissions, the system may spread the pilot tones **935** for different logic RUs so that common pilot signals (for example, pilots for downlink or single-user applications) provide greater frequency diversity than dedicated pilots in a resource block.

[0157] While the configurations and designs are described above with respect to logic RU26s, other sizes of RUs are supported. In some examples, these other RU sizes may be based on a smaller sized logic RU. For example, to support distributed RUs with 52 tones, each logic RU52 may be composed of two logic RU26s (for example, the logic RU26s may be defined according to any of the tone mapping configurations **900** described above). In one specific example, a logic RU52 may be formed using the distributed physical tones for two neighboring logic RU26s. Table 5 describes such a configuration:

TABLE 5

Logic RU26 Indices Belonging to Corresponding Logic RU52s

	RU52 Logic Index			
	1	2	3	4
Covered Logic RU26 Indices	1, 2	3, 4	6, 7	8, 9

In such a configuration, one or more logic RU26s may be excluded in larger RU mapping (for example, logic RU26 5).

[0158] Similarly, to support distributed RUs with 106 tones, each logic RU106 may be composed of four logic RU26s. In one specific example, a logic RU106 may be formed using the distributed physical tones for four neighboring logic RU26s, along with two additional tones (for example, edge tones, DC tones, and/or tones from a dropped logic RU26, such as logic RU26 5). In some other examples, the logic RU106 may be formed using tones for even or odd indexed logic RU26s. Each logic RU106 may include 102 data tones and 4 pilot tones. Accordingly, four pilot tones of the four RU26s composing the RU106 may be used as data tones to support RU106 distribution. Table 6 describes one such possible configuration for distributed RU106 tone locations:

TABLE 6

Logic RU26 Indices and Physical Tone Indices Belonging to Corresponding Logic RU106s

	RU106 Logic Index	
	1	2
Covered Logic RU26 Indices	1, 2, 3, 4	6, 7, 8, 9
Covered Edge Tone Indices	−122, −121	121, 122
Pilot Tones Switched to Data Tones	−120, −118, 4, 114	−114, −4, 118, 120

[0159] FIG. **10** shows a block diagram **1000** of an example wireless communication device **1005**. The device **1005** may be an example of aspects of an AP as described herein. The device **1005** may include a receiver **1010**, an RU manager **1015**, and a transmitter **1020**. The RU manager **1015** can be implemented, at least in part, by one or both of a modem and a processor. Each of these components may be in communication with one another, for example, via one or more buses.

[0160] The receiver **1010** may receive information such as packets, user data, or control information associated with various information channels, such as control channels, data channels, and information related to RU spreading. Information may be passed on to other components of the device. The receiver **1010** may be an example of aspects of the transceiver **1320** described with reference to FIG. **13**. The receiver **1010** may utilize a single antenna or a set of antennas.

[0161] The RU manager **1015** may assign a first RU to a first wireless node, in which the first RU includes a first non-contiguous set of tones of a channel, generate a first indicator indicating the first RU, output the first indicator for transmission, and obtain data from the first wireless node via the first RU. The RU manager **1015** may be an example of aspects of the RU manager **1310** described herein.

[0162] The RU manager **1015**, or its sub-components, may be implemented in hardware, code (software or firmware) executed by a processor, or any combination thereof. If implemented in code executed by a processor, the functions of the RU manager **1015**, or its sub-components may be executed by a general-purpose processor, a digital signal processor (DSP), an application-specific integrated circuit (ASIC), a field-programmable gate array (FPGA) or other programmable logic device, discrete gate or transistor logic, discrete hardware components, or any combination thereof designed to perform the functions described in the present disclosure. The RU manager **1015**, or its sub-components, may be physically located at different locations, including being distributed such that portions of functions are implemented at different physical locations by one or more physical components.

[0163] The transmitter **1020** may transmit signals generated by other components of the device. In some examples, the transmitter **1020** may be collocated with a receiver **1010** in a transceiver module. For example, the transmitter **1020** may be an example of aspects of the transceiver **1320** described with reference to FIG. **13**. The transmitter **1020** may utilize a single antenna or a set of antennas.

[0164] FIG. **11** shows a block diagram **1100** of an example wireless communication device **1105**. The device **1105** may be an example of aspects of a device **1005** or an AP as described herein. The device **1105** may include a receiver **1110**, an RU manager **1115**, and a transmitter **1135**. The device **1105** may also include a processor. Each of these components may be in communication with one another, for example, via one or more buses.

[0165] The receiver **1110** may receive information such as packets, user data, or control information associated with various information channels. Information may be passed on to other components of the device. The receiver **1110** may be an example of aspects of the transceiver **1320** described with reference to FIG. **13**. The receiver **1110** may utilize a single antenna or a set of antennas.

[0166] The RU manager **1115** may be an example of aspects of the RU manager **1015** as described herein. The RU manager **1115** may include a tone distribution component **1120**, an RU indication component **1125**, and a data communication component **1130**. The RU manager **1115** may be an example of aspects of the RU manager **1310** described herein.

[0167] The tone distribution component **1120** may assign a first RU to a first wireless node, in which the first RU includes a first non-contiguous set of tones of a channel. The RU indication component **1125** may generate a first indicator indicating the first RU and output the first indicator for transmission. The data communication component **1130** may obtain data from the first wireless node via the first RU.

[0168] The transmitter **1135** may transmit signals generated by other components of the device. In some examples, the transmitter **1135** may be collocated with a receiver **1110** in a transceiver module. For example, the transmitter **1135** may be an example of aspects of the transceiver **1320** described with reference to FIG. **13**. The transmitter **1135** may utilize a single antenna or a set of antennas.

[0169] FIG. **12** shows a block diagram **1200** of an example RU manager **1205**. The RU manager **1205** may support RU spreading in accordance with aspects of the present disclosure. The RU manager **1205** may be an example of aspects of an RU manager **1015**, an RU manager **1115**, or an RU manager **1310** described herein. The RU manager **1205** may include a tone distribution component **1210**, an RU indication component **1215**, a data communication component **1220**, a trigger frame component **1225**, a mapping component **1230**, a pattern component **1235**, a function component **1240**, an interference component **1245**, a TTI indication component **1250**, a pilot communication component **1255**, or any combination of these components. Each of these modules may communicate, directly or indirectly, with one another, for example, via one or more buses.

[0170] The tone distribution component **1210** may assign a first RU to a first wireless node, in which the first RU includes a first non-contiguous set of tones of a channel. The RU indication component **1215** may generate a first indicator indicating the first RU and may output the first indicator for transmission. The data communication component **1220** may obtain data from the first wireless node via the first RU.

[0171] In some implementations, the tone distribution component **1210** may assign a second RU to a second wireless node, in which the second RU includes a second non-contiguous set of tones of the channel. In some of these implementations, the RU indication component **1215** may generate a second indicator indicating the second RU and may output the second indicator for transmission. The data communication component **1220** may obtain data from the second wireless node via the second RU. In some examples, the data from the first wireless node and the data from the second wireless node may be obtained concurrently. In some implementations, the first non-contiguous set of tones is interspersed with the second non-contiguous set of tones. The trigger frame component **1225** may generate a trigger frame including the first indicator and the second indicator and may output the trigger frame for transmission. Outputting the trigger frame may involve outputting the first indicator and outputting the second indicator.

[0172] The mapping component **1230** may generate an indication of a mapping from the first indicator to the first non-contiguous set of tones and may output the indication of the mapping for transmission.

[0173] The pattern component **1235** may change the first non-contiguous set of tones on a periodic basis according to a pattern, generate an indication of the pattern, and output the indication of the pattern for transmission.

[0174] In some examples, the first non-contiguous set of tones may be defined at least in part by a function. In some of these examples, the function component **1240** may generate one or both of an indication of the function or one or more parameter values for the function and may output, for transmission, one or both of the indication of the function or the one or more parameter values.

[0175] The interference component **1245** may determine, for the channel, one or more tones experiencing interference and may exclude the one or more determined tones from the first non-contiguous set of tones. In some examples, the interference component **1245** may obtain a message from the first wireless node or another wireless node indicating the one or more tones experiencing the interference. Determining the one or more tones may involve determining the one or more tones according to the message.

[0176] The TTI indication component **1250** may allocate a TTI for the first wireless node to transmit the data, generate an indication of the TTI, in which the TTI includes a set of time slots and the first non-contiguous set of tones is different in at least one time slot of the set of time slots than at least one other time slot of the set of time slots, and output the indication of the TTI for transmission.

[0177] In some implementations, the tone distribution component **1210** may determine the first non-contiguous set of tones distributed across a channel bandwidth of the channel, in which a majority of the first non-contiguous set of tones includes distributed pairs of adjacent tones and the channel bandwidth includes one or more leading unused edge tones, a first contiguous portion of useful tones, one or more unused DC tones, a second contiguous portion of useful tones, and one or more following unused edge tones, the first contiguous portion of useful tones and the second contiguous portion of useful tones including the determined first non-contiguous set of tones. In some of these implementations, the data communication component **1220** may obtain data over a set of data tones of the determined first non-contiguous set of tones, and a pilot communication component **1255** may obtain one or more pilot signals over a set of pilot tones of the determined first non-contiguous set of tones.

[0178] In some examples, the pilot communication component **1255** may allocate the channel bandwidth for a set of logic RUs including at least the first RU, in which pilot tones

for the set of logic RUs form one or more contiguous sets of pilot tones, and each set of the one or more contiguous sets of pilot tones borders the one or more leading unused edge tones, the one or more unused DC tones, or the one or more following unused edge tones. In some other examples, the pilot communication component **1255** may allocate the channel bandwidth for a set of logic RUs including at least the first RU, in which pilot tones for the set of logic RUs form one or more contiguous sets of pilot tones, and each set of the one or more contiguous sets of pilot tones is allocated to central tones in the first contiguous portion of useful tones or to central tones in the second contiguous portion of useful tones. In yet some other examples, each pilot tone of the set of pilot tones may be contiguous to two data tones of the set of data tones.

[0179] FIG. **13** shows a block diagram of an example AP. For example, a system **1300** may include a wireless communication device **1305**, such as an AP, that supports RU spreading in accordance with aspects of the present disclosure. The device **1305** may be an example of or include the components of a device **1005**, a device **1105**, or an AP as described herein. The device **1305** may include components for bi-directional voice and data communications including components for transmitting and receiving communications, including an RU manager **1310**, a network communications manager **1315**, a transceiver **1320**, an antenna **1325**, memory **1330**, a processor **1340**, and an inter-station communications manager **1345**. These components may be in electronic communication via one or more buses, such as bus **1350**.

[0180] The RU manager **1310** may assign a first RU to a first wireless node, in which the first RU includes a first non-contiguous set of tones of a channel, generate a first indicator indicating the first RU, output the first indicator for transmission, and obtain data from the first wireless node via the first RU.

[0181] The network communications manager **1315** may manage communications with the core network via one or more wired or wireless backhaul links. For example, the network communications manager **1315** may manage the transfer of data communications for client devices, such as one or more STAs.

[0182] The transceiver **1320** may communicate bi-directionally, via one or more antennas, wired, or wireless links as described above. For example, the transceiver **1320** may represent a wireless transceiver and may communicate bi-directionally with another wireless transceiver, such as a wireless transceiver at a STA **1335**. The transceiver **1320** may also include a modem to modulate the packets and provide the modulated packets to the antennas for transmission, and to demodulate packets received from the antennas. In some implementations, the wireless device may include a single antenna **1325**. However, in some implementations the device may have more than one antenna **1325**, which may be capable of concurrently transmitting or receiving multiple wireless transmissions.

[0183] The memory **1330** may include random-access memory (RAM) and read-only memory (ROM). The memory **1330** may store computer-readable, computer-executable code including instructions that, when executed, cause the processor to perform various functions described herein. In some implementations, the memory **1330** may contain, among other things, a basic input/output system (BIOS) which may control basic hardware or software operation such as the interaction with peripheral components or devices.

[0184] The processor **1340** may include an intelligent hardware device, such as a general-purpose processor, a DSP, a central processing unit (CPU), a microcontroller, an ASIC, an FPGA, a programmable logic device, a discrete gate or transistor logic component, a discrete hardware component, or any combination thereof. In some examples, the processor **1340** may be configured to operate a memory array using a memory controller. In other examples, a memory controller may be integrated into processor **1340**. The processor **1340** may be configured to execute computer-readable instructions stored in a memory to perform various functions (for example, functions or tasks supporting RU spreading).

[0185] The inter-station communications manager **1345** may manage communications with other APs and may include a controller or scheduler for controlling communications with STAs in cooperation with other APs. For example, the inter-station communications manager **1345** may coordinate scheduling for transmissions to STAs for various interference mitigation techniques such as beamforming or joint transmission. In some examples, the inter-station communications manager **1345** may provide an X2 interface within a wireless communication network to provide communication between APs.

[0186] FIG. **14** shows a block diagram **1400** of an example wireless communication device **1405**. The device **1405** may be an example of aspects of a STA as described herein. The device **1405** may include a receiver **1410**, an RU manager **1415**, and a transmitter **1420**. The RU manager **1415** can be implemented, at least in part, by one or both of a modem and a processor. Each of these components may be in communication with one another, for example, via one or more buses.

[0187] Receiver **1410** may receive information such as packets, user data, or control information associated with various information channels, such as control channels, data channels, and information related to RU spreading. Information may be passed on to other components of the device. The receiver **1410** may be an example of aspects of the transceiver **1720** described with reference to FIG. **17**. The receiver **1410** may utilize a single antenna or a set of antennas.

[0188] The RU manager **1415** may obtain a first indicator indicating a first RU, determine a first non-contiguous set of tones of a channel for the first RU, and output data for transmission over the first non-contiguous set of tones for the first RU. The RU manager **1415** may be an example of aspects of the RU manager **1710** described herein.

[0189] The RU manager **1415**, or its sub-components, may be implemented in hardware, code (software or firmware) executed by a processor, or any combination thereof. The RU manager **1415**, or its sub-components, may be physically located at different locations, including being distributed such that portions of functions are implemented at different physical locations by one or more physical components.

[0190] Transmitter **1420** may transmit signals generated by other components of the device. In some examples, the transmitter **1420** may be collocated with a receiver **1410** in a transceiver module. For example, the transmitter **1420** may be an example of aspects of the transceiver **1720** described

with reference to FIG. **17**. The transmitter **1420** may utilize a single antenna or a set of antennas.

[0191] FIG. **15** shows a block diagram **1500** of an example wireless communication device **1505**. The device **1505** may be an example of aspects of a device **1405** or a STA as described herein. The device **1505** may include a receiver **1510**, an RU manager **1515**, and a transmitter **1535**. The device **1505** may also include a processor. Each of these components may be in communication with one another, for example, via one or more buses.

[0192] Receiver **1510** may receive information such as packets, user data, or control information associated with various information channels. Information may be passed on to other components of the device. The receiver **1510** may be an example of aspects of the transceiver **1720** described with reference to FIG. **17**. The receiver **1510** may utilize a single antenna or a set of antennas.

[0193] The RU manager **1515** may be an example of aspects of the RU manager **1415** as described herein. The RU manager **1515** may include an RU identification component **1520**, a tone identification component **1525**, and a data communication component **1530**. The RU manager **1515** may be an example of aspects of the RU manager **1710** described herein.

[0194] The RU identification component **1520** may obtain a first indicator indicating a first RU. The tone identification component **1525** may determine a first non-contiguous set of tones of a channel for the first RU. The data communication component **1530** may output data for transmission over the first non-contiguous set of tones for the first RU.

[0195] Transmitter **1535** may transmit signals generated by other components of the device. In some examples, the transmitter **1535** may be collocated with a receiver **1510** in a transceiver module. For example, the transmitter **1535** may be an example of aspects of the transceiver **1720** described with reference to FIG. **17**. The transmitter **1535** may utilize a single antenna or a set of antennas.

[0196] FIG. **16** shows a block diagram **1600** of an example RU manager **1605**. The RU manager **1605** may support RU spreading in accordance with aspects of the present disclosure. The RU manager **1605** may be an example of aspects of an RU manager **1415**, an RU manager **1515**, or an RU manager **1710** described herein. The RU manager **1605** may include an RU identification component **1610**, a tone identification component **1615**, a data communication component **1620**, a request component **1625**, a pilot communication component **1630**, or any combination of these components. Each of these modules may communicate, directly or indirectly, with one another, for example, via one or more buses.

[0197] The RU identification component **1610** may obtain a first indicator indicating a first RU. The tone identification component **1615** may determine a first non-contiguous set of tones of a channel for the first RU. The data communication component **1620** may output data for transmission over the first non-contiguous set of tones for the first RU.

[0198] In some implementations, the RU identification component **1610** may determine that the first RU is additionally assigned to a second wireless node different than the wireless node. Outputting the data may further involve the data communication component **1620** outputting the data for transmission over a first subset of the first non-contiguous set of tones for the first RU.

[0199] In some implementations, the tone identification component **1615** may obtain one or more of a trigger frame including the first indicator, an indication of a mapping from the first indicator to the first non-contiguous set of tones, an indication of a pattern for changing the first non-contiguous set of tones on a periodic basis, an indication of a function defining the first non-contiguous set of tones, or one or more parameters for the function, in which the first non-contiguous set of tones for the first RU is determined according to one or more of the trigger frame, the mapping, the pattern, the function, or the one or more parameters for the function.

[0200] The request component **1625** may output, for transmission, one or both of a request requesting an RU or a message indicating that the wireless node is experiencing interference. The first indicator indicating the first RU may be obtained in response to one or both of the request or the message.

[0201] In some implementations, a majority of the first non-contiguous set of tones includes distributed pairs of adjacent tones across a channel bandwidth and the channel bandwidth includes one or more leading unused edge tones, a first contiguous portion of useful tones, one or more unused DC tones, a second contiguous portion of useful tones, and one or more following unused edge tones, the first contiguous portion of useful tones and the second contiguous portion of useful tones including the determined first non-contiguous set of tones. In some of these implementations, the pilot communication component **1630** may output, for transmission, one or more pilot signals over a set of pilot tones of the first non-contiguous set of tones. The data may be output for transmission over a set of data tones of the first non-contiguous set of tones.

[0202] FIG. **17** shows a block diagram of an example STA. For example, a system **1700** may include a wireless communication device **1705**, such as a STA, that supports RU spreading in accordance with aspects of the present disclosure. The device **1705** may be an example of or include the components of device **1405**, device **1505**, or a STA as described herein. The device **1705** may include components for bi-directional voice and data communications including components for transmitting and receiving communications, including an RU manager **1710**, an input/output (I/O) controller **1715**, a transceiver **1720**, an antenna **1725**, memory **1730**, and a processor **1740**. These components may be in electronic communication via one or more buses, such as bus **1745**.

[0203] The RU manager **1710** may obtain a first indicator indicating a first RU, determine a first non-contiguous set of tones of a channel for the first RU, and output data for transmission over the first non-contiguous set of tones for the first RU.

[0204] I/O controller **1715** may manage input and output signals for device **1705**. I/O controller **1715** may also manage peripherals not integrated into device **1705**. In some implementations, I/O controller **1715** may represent a physical connection or port to an external peripheral. In some examples, I/O controller **1715** may utilize an operating system such as iOS®, ANDROID®, MS-DOS®, MS-WINDOWS®, OS/2®, UNIX®, LINUX®, or another known operating system. In other examples, I/O controller **1715** may represent or interact with a modem, a keyboard, a mouse, a touchscreen, or a similar device. In some examples, I/O controller **1715** may be implemented as part of a processor. In some implementations, a user may interact

with device **1705** via I/O controller **1715** or via hardware components controlled by I/O controller **1715**.

[0205] Transceiver **1720** may communicate bi-directionally, via one or more antennas, wired, or wireless links as described above. For example, the transceiver **1720** may represent a wireless transceiver and may communicate bi-directionally with another wireless transceiver, such as a wireless transceiver that is part of an AP **1735**. The transceiver **1720** may also include a modem to modulate the packets and provide the modulated packets to the antennas for transmission, and to demodulate packets received from the antennas.

[0206] In some examples, the wireless device may include a single antenna **1725**. However, in other examples, the device may have more than one antenna **1725**, which may be capable of concurrently transmitting or receiving multiple wireless transmissions.

[0207] Memory **1730** may include RAM and ROM. The memory **1730** may store computer-readable, computer-executable software including instructions that, when executed, cause the processor to perform various functions described herein. In some examples, the memory **1730** may contain, among other things, a BIOS which may control basic hardware or software operation such as the interaction with peripheral components or devices.

[0208] Processor **1740** may include an intelligent hardware device, such as a general-purpose processor, a DSP, a CPU, a microcontroller, an ASIC, an FPGA, a programmable logic device, a discrete gate or transistor logic component, a discrete hardware component, or any combination thereof. In some examples, processor **1740** may be configured to operate a memory array using a memory controller. In other examples, a memory controller may be integrated into processor **1740**. Processor **1740** may be configured to execute computer-readable instructions stored in a memory to perform various functions.

[0209] FIG. **18** shows a flowchart illustrating an example process **1800** for RU spreading according to some implementations. The operations of process **1800** may be implemented by an AP or its components as described herein. For example, the operations of process **1800** may be performed by an RU manager as described with reference to FIGS. **10-13**. In some examples, an AP may execute a set of instructions to control the functional elements of the AP to perform the functions described below. Additionally or alternatively, an AP may perform aspects of the functions described below using special-purpose hardware.

[0210] At **1805**, the AP may assign a first RU to a first wireless node, in which the first RU includes a first non-contiguous set of tones of a channel. The operations of **1805** may be performed according to the methods described herein. In some examples, aspects of the operations of **1805** may be performed by a tone distribution component as described with reference to FIGS. **10-13**.

[0211] At **1810**, the AP may generate a first indicator indicating the first RU. The operations of **1810** may be performed according to the methods described herein. In some examples, aspects of the operations of **1810** may be performed by an RU indication component as described with reference to FIGS. **10-13**.

[0212] At **1815**, the AP may output the first indicator for transmission. The operations of **1815** may be performed according to the methods described herein. In some examples, aspects of the operations of **1815** may be performed by an RU indication component as described with reference to FIGS. **10-13**.

[0213] At **1820**, the AP may obtain data from the first wireless node via the first RU. The operations of **1820** may be performed according to the methods described herein. In some examples, aspects of the operations of **1820** may be performed by a data communication component as described with reference to FIGS. **10-13**.

[0214] FIG. **19** shows a flowchart illustrating an example process **1900** for RU spreading according to some implementations. The operations of process **1900** may be implemented by an AP or its components as described herein. For example, the operations of process **1900** may be performed by an RU manager as described with reference to FIGS. **10-13**. In some examples, an AP may execute a set of instructions to control the functional elements of the AP to perform the functions described below. Additionally or alternatively, an AP may perform aspects of the functions described below using special-purpose hardware.

[0215] At **1905**, the AP may assign an RU to a first wireless node and a second wireless node, in which the RU includes a set of tones—such as a non-contiguous set of tones—of a channel. The operations of **1905** may be performed according to the methods described herein. In some examples, aspects of the operations of **1905** may be performed by a tone distribution component as described with reference to FIGS. **10-13**.

[0216] At **1910**, the AP may generate an indicator indicating the RU. The operations of **1910** may be performed according to the methods described herein. In some examples, aspects of the operations of **1910** may be performed by an RU indication component as described with reference to FIGS. **10-13**.

[0217] At **1915**, the AP may output the indicator for transmission. The operations of **1915** may be performed according to the methods described herein. In some examples, aspects of the operations of **1915** may be performed by an RU indication component as described with reference to FIGS. **10-13**.

[0218] At **1920**, the AP may obtain data from the first wireless node via a first subset of the set of tones for the RU. The first subset of tones may be non-contiguous. The operations of **1920** may be performed according to the methods described herein. In some examples, aspects of the operations of **1920** may be performed by a data communication component as described with reference to FIGS. **10-13**.

[0219] At **1925**, the AP may obtain data from the second wireless node via a second subset of the set of tones for the RU. The second subset of tones may be non-contiguous. The operations of **1920** may be performed according to the methods described herein. In some examples, aspects of the operations of **1920** may be performed by a data communication component as described with reference to FIGS. **10-13**.

[0220] FIG. **20** shows a flowchart illustrating an example process **2000** for RU spreading according to some implementations. The operations of process **2000** may be implemented by a STA or its components as described herein. For example, the operations of process **2000** may be performed by an RU manager as described with reference to FIGS. **14-17**. In some examples, a STA may execute a set of instructions to control the functional elements of the STA to

perform the functions described below. Additionally or alternatively, a STA may perform aspects of the functions described below using special-purpose hardware.

[0221] At **2005**, the STA may obtain a first indicator indicating a first RU. The operations of **2005** may be performed according to the methods described herein. In some examples, aspects of the operations of **2005** may be performed by an RU identification component as described with reference to FIGS. **14-17**.

[0222] At **2010**, the STA may determine a first non-contiguous set of tones of a channel for the first RU. The operations of **2010** may be performed according to the methods described herein. In some examples, aspects of the operations of **2010** may be performed by a tone identification component as described with reference to FIGS. **14-17**.

[0223] At **2015**, the STA may output data for transmission over the first non-contiguous set of tones for the first RU. The operations of **2015** may be performed according to the methods described herein. In some examples, aspects of the operations of **2015** may be performed by a data communication component as described with reference to FIGS. **14-17**.

[0224] As used herein, a phrase referring to "at least one of" or "one or more of" a list of items refers to any combination of those items, including single members. For example, "at least one of: a, b, or c" is intended to cover the possibilities of: a only, b only, c only, a combination of a and b, a combination of a and c, a combination of b and c, and a combination of a and b and c.

[0225] The various illustrative components, logic, logical blocks, modules, circuits, operations and algorithm processes described in connection with the implementations disclosed herein may be implemented as electronic hardware, firmware, software, or combinations of hardware, firmware or software, including the structures disclosed in this specification and the structural equivalents thereof. The interchangeability of hardware, firmware and software has been described generally, in terms of functionality, and illustrated in the various illustrative components, blocks, modules, circuits and processes described above. Whether such functionality is implemented in hardware, firmware or software depends upon the particular application and design constraints imposed on the overall system.

[0226] Various modifications to the implementations described in this disclosure may be readily apparent to persons having ordinary skill in the art, and the generic principles defined herein may be applied to other implementations without departing from the spirit or scope of this disclosure. Thus, the claims are not intended to be limited to the implementations shown herein, but are to be accorded the widest scope consistent with this disclosure, the principles and the novel features disclosed herein.

[0227] Additionally, various features that are described in this specification in the context of separate implementations also can be implemented in combination in a single implementation. Conversely, various features that are described in the context of a single implementation also can be implemented in multiple implementations separately or in any suitable subcombination. As such, although features may be described above as acting in particular combinations, and even initially claimed as such, one or more features from a claimed combination can in some cases be excised from the combination, and the claimed combination may be directed to a subcombination or variation of a subcombination.

[0228] Similarly, while operations are depicted in the drawings in a particular order, this should not be understood as requiring that such operations be performed in the particular order shown or in sequential order, or that all illustrated operations be performed, to achieve desirable results. Further, the drawings may schematically depict one more example processes in the form of a flowchart or flow diagram. However, other operations that are not depicted can be incorporated in the example processes that are schematically illustrated. For example, one or more additional operations can be performed before, after, simultaneously, or between any of the illustrated operations. In some circumstances, multitasking and parallel processing may be advantageous. Moreover, the separation of various system components in the implementations described above should not be understood as requiring such separation in all implementations, and it should be understood that the described program components and systems can generally be integrated together in a single software product or packaged into multiple software products.

What is claimed is:

1. A method for wireless communications, comprising:

assigning a first resource unit (RU) to a first wireless node, wherein the first RU comprises a first non-contiguous set of tones of a channel;

generating a first indicator indicating the first RU;

outputting the first indicator for transmission; and

obtaining data from the first wireless node via the first RU.

2. The method of claim **1**, further comprising:

assigning a second RU to a second wireless node, wherein the second RU comprises a second non-contiguous set of tones of the channel;

generating a second indicator indicating the second RU;

outputting the second indicator for transmission; and

obtaining data from the second wireless node via the second RU, wherein the data from the first wireless node and the data from the second wireless node are obtained concurrently.

3. The method of claim **2**, wherein the first non-contiguous set of tones is interspersed with the second non-contiguous set of tones.

4. The method of claim **2**, further comprising:

generating a trigger frame comprising the first indicator and the second indicator; and

outputting the trigger frame for transmission, wherein outputting the trigger frame comprises outputting the first indicator and outputting the second indicator.

5. The method of claim **1**, further comprising:

generating an indication of a mapping from the first indicator to the first non-contiguous set of tones; and

outputting the indication of the mapping for transmission.

6. The method of claim **1**, further comprising:

changing the first non-contiguous set of tones on a periodic basis according to a pattern;

generating an indication of the pattern; and

outputting the indication of the pattern for transmission.

7. The method of claim **1**, wherein the first non-contiguous set of tones is defined at least in part by a function, the method further comprising:

generating one or both of an indication of the function or one or more parameter values for the function; and

outputting, for transmission, one or both of the indication of the function or the one or more parameter values.

8. The method of claim **1**, further comprising:

determining, for the channel, one or more tones experiencing interference; and

selecting the tones for the first non-contiguous set of tones such that they do not include the one or more tones experiencing interference.

9. The method of claim **8**, further comprising obtaining a message from the first wireless node or another wireless node indicating the one or more tones experiencing the interference, wherein determining the one or more tones comprises determining the one or more tones according to the message.

10. The method of claim **1**, further comprising:

allocating a transmission time interval for the first wireless node to transmit the data;

generating an indication of the transmission time interval, wherein the transmission time interval comprises a plurality of time slots and the first non-contiguous set of tones is different in at least one time slot of the plurality of time slots than at least one other time slot of the plurality of time slots; and

outputting the indication of the transmission time interval for transmission.

11. The method of claim **1**, further comprising:

determining the first non-contiguous set of tones distributed across a channel bandwidth, wherein a majority of the first non-contiguous set of tones comprises distributed pairs of adjacent tones and the channel bandwidth comprises one or more leading unused edge tones, a first contiguous portion of useful tones, one or more unused direct current (DC) tones, a second contiguous portion of useful tones, and one or more following unused edge tones, the first contiguous portion of useful tones and the second contiguous portion of useful tones comprising the determined first non-contiguous set of tones;

obtaining the data over a set of data tones of the determined first non-contiguous set of tones; and

obtaining one or more pilot signals over a set of pilot tones of the determined first non-contiguous set of tones.

12. The method of claim **11**, further comprising allocating the channel bandwidth for a plurality of logic RUs comprising at least the first RU, wherein pilot tones for the plurality of logic RUs form one or more contiguous sets of pilot tones, and each set of the one or more contiguous sets of pilot tones borders the one or more leading unused edge tones, the one or more unused DC tones, or the one or more following unused edge tones.

13. The method of claim **11**, further comprising allocating the channel bandwidth for a plurality of logic RUs comprising at least the first RU, wherein pilot tones for the plurality of logic RUs form one or more contiguous sets of pilot tones, and each set of the one or more contiguous sets of pilot tones is allocated to central tones in the first contiguous portion of useful tones or to central tones in the second contiguous portion of useful tones.

14. The method of claim **11**, wherein each pilot tone of the set of pilot tones is contiguous to two data tones of the set of data tones.

15. A method for wireless communications at a wireless node, comprising:

obtaining a first indicator indicating a first resource unit (RU);

determining a first non-contiguous set of tones of a channel for the first RU; and

outputting data for transmission over the first non-contiguous set of tones for the first RU.

16. The method of claim **15**, further comprising obtaining one or more of a trigger frame comprising the first indicator, an indication of a mapping from the first indicator to the first non-contiguous set of tones, an indication of a pattern for changing the first non-contiguous set of tones on a periodic basis, an indication of a function defining the first non-contiguous set of tones, or one or more parameters for the function, wherein the first non-contiguous set of tones for the first RU is determined according to one or more of the trigger frame, the mapping, the pattern, the function, or the one or more parameters for the function.

17. The method of claim **15**, further comprising outputting, for transmission, one or both of a request requesting an RU or a message indicating that the wireless node is experiencing interference, wherein the first indicator indicating the first RU is obtained in response to one or both of the request or the message.

18. The method of claim **15**, wherein a majority of the first non-contiguous set of tones comprises distributed pairs of adjacent tones across a channel bandwidth and the channel bandwidth comprises one or more leading unused edge tones, a first contiguous portion of useful tones, one or more unused direct current (DC) tones, a second contiguous portion of useful tones, and one or more following unused edge tones, the first contiguous portion of useful tones and the second contiguous portion of useful tones comprising the determined first non-contiguous set of tones, wherein the method further comprises:

outputting, for transmission, one or more pilot signals over a set of pilot tones of the first non-contiguous set of tones, wherein the data is output for transmission over a set of data tones of the first non-contiguous set of tones.

19. The method of claim **15**, further comprising determining that the first RU is additionally assigned to a second wireless node different than the wireless node, wherein the outputting the data further comprises:

outputting the data for transmission over a first subset of the first non-contiguous set of tones for the first RU.

20. An apparatus for wireless communications, comprising:

a processor;

memory coupled with the processor; and

instructions stored in the memory and executable by the processor to cause the apparatus to:

assign a first resource unit (RU) to a first wireless node, wherein the first RU comprises a first non-contiguous set of tones of a channel;

generate a first indicator indicating the first RU;

output the first indicator for transmission; and

obtain data from the first wireless node via the first RU.

21. The apparatus of claim **20**, wherein the instructions are further executable by the processor to cause the apparatus to:

assign a second RU to a second wireless node, wherein the second RU comprises a second non-contiguous set of tones of the channel;

generate a second indicator indicating the second RU;

output the second indicator for transmission; and

obtain data from the second wireless node via the second RU, wherein the data from the first wireless node and the data from the second wireless node are obtained concurrently.

22. The apparatus of claim **20**, wherein the instructions are further executable by the processor to cause the apparatus to:

generate an indication of a mapping from the first indicator to the first non-contiguous set of tones; and

output the indication of the mapping for transmission.

23. The apparatus of claim **20**, wherein the instructions are further executable by the processor to cause the apparatus to:

change the first non-contiguous set of tones on a periodic basis according to a pattern;

generate an indication of the pattern; and

output the indication of the pattern for transmission.

24. The apparatus of claim **20**, wherein the first non-contiguous set of tones is defined at least in part by a function, the instructions further executable by the processor to cause the apparatus to:

generate one or both of an indication of the function or one or more parameter values for the function; and

output, for transmission, one or both of the indication of the function or the one or more parameter values.

25. The apparatus of claim **20**, wherein the instructions are further executable by the processor to cause the apparatus to:

determine, for the channel, one or more tones experiencing interference; and

select the tones for the first non-contiguous set of tones such that they do not include the one or more tones experiencing interference.

26. The apparatus of claim **20**, wherein the instructions are further executable by the processor to cause the apparatus to:

allocate a transmission time interval for the first wireless node to transmit the data;

generate an indication of the transmission time interval, wherein the transmission time interval comprises a plurality of time slots and the first non-contiguous set of tones is different in at least one time slot of the plurality of time slots than at least one other time slot of the plurality of time slots; and

output the indication of the transmission time interval for transmission.

27. The apparatus of claim **20**, wherein the instructions are further executable by the processor to cause the apparatus to:

determine the first non-contiguous set of tones distributed across a channel bandwidth, wherein a majority of the first non-contiguous set of tones comprises distributed pairs of adjacent tones and the channel bandwidth comprises one or more leading unused edge tones, a first contiguous portion of useful tones, one or more unused direct current (DC) tones, a second contiguous portion of useful tones, and one or more following unused edge tones, the first contiguous portion of useful tones and the second contiguous portion of useful tones comprising the determined first non-contiguous set of tones;

obtain the data over a set of data tones of the determined first non-contiguous set of tones; and

obtain one or more pilot signals over a set of pilot tones of the determined first non-contiguous set of tones.

28. An apparatus for wireless communications at a wireless node, comprising:

a processor;

memory coupled with the processor; and

instructions stored in the memory and executable by the processor to cause the apparatus to:

obtain a first indicator indicating a first resource unit (RU);

determine a first non-contiguous set of tones of a channel for the first RU; and

output data for transmission over the first non-contiguous set of tones for the first RU.

29. The apparatus of claim **28**, wherein the instructions are further executable by the processor to cause the apparatus to obtain one or more of a trigger frame comprising the first indicator, an indication of a mapping from the first indicator to the first non-contiguous set of tones, an indication of a pattern for changing the first non-contiguous set of tones on a periodic basis, an indication of a function defining the first non-contiguous set of tones, or one or more parameters for the function, wherein the first non-contiguous set of tones for the first RU is determined according to one or more of the trigger frame, the mapping, the pattern, the function, or the one or more parameters for the function.

30. The apparatus of claim **28**, wherein a majority of the first non-contiguous set of tones comprises distributed pairs of adjacent tones across a channel bandwidth and the channel bandwidth comprises one or more leading unused edge tones, a first contiguous portion of useful tones, one or more unused direct current (DC) tones, a second contiguous portion of useful tones, and one or more following unused edge tones, the first contiguous portion of useful tones and the second contiguous portion of useful tones comprising the determined first non-contiguous set of tones, wherein the instructions are further executable by the processor to cause the apparatus to:

output, for transmission, one or more pilot signals over a set of pilot tones of the first non-contiguous set of tones, wherein the data is output for transmission over a set of data tones of the first non-contiguous set of tones.

* * * * *