# Theory of Weirs

Dr. Sergio Maldonado
CENV3066 Environmental Hydraulics
University of Southampton

**Abstract**

Weirs can be used as flow measurement devices. This is because they perturb the flow in such a way that a unique relationship is fixed between flow discharge and local water depth (upstream of the structure). Here, we will discover this unique relationship (the weir equation) by employing simple analytical tools which you acquired in introductory hydraulics (such as Bernoulli's equation). The aim is to illustrate both the strengths and limitations of simple hydraulic theory, with a view to begin our journey towards more advanced concepts of environmental hydraulics.

## 1 Sharp-crested weirs

Figure 1: Picture of a sharp-crested weir in a laboratory flume.

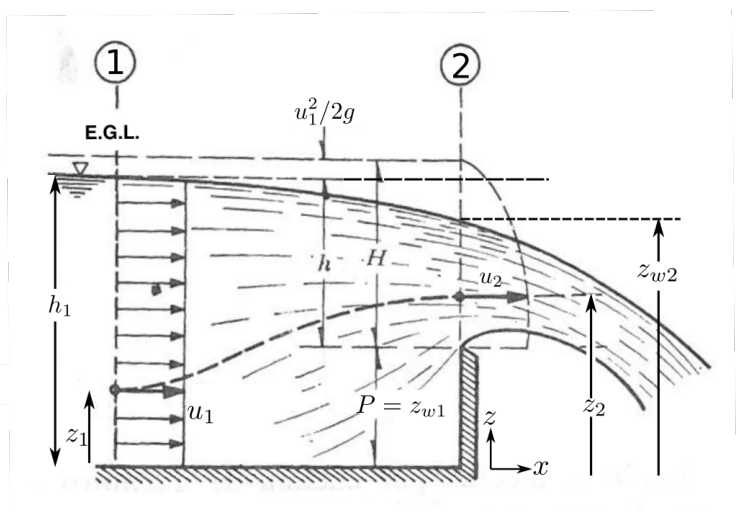


Figure 2: Sketch of flow over a sharp-crested weir (side view). [Modified from Sotelo 2006]

Let us apply our knowledge from CENV2008 Hydraulics to the study of flow over a sharp-crested weir. We will start with the most general case (making no assumptions), and then invoke and discuss diverse simplifying assumptions in order to yield practical equations for popular types of sharp-crested weirs. At the end, we want to evaluate how well these equations, derived from basic hydraulics theory, perform in real-world problems.

Consider the two-dimensional $(x - z)$ flow shown in Fig. 2. **The goal is to find an expression that gives us the flow discharge through the weir as function of a simple-to-measure variable**, such as the upstream water depth[1] $h_1$. First, the discharge through the weir, $Q$, is by definition the integral of the horizontal component of the flow velocity, $u$, over the cross-sectional area of the flow at section 2, $A_w$; in other words,

$$Q = \int_{A_w} u dA. \tag{1}$$

Our first assumption is that $u$ varies only in the vertical direction $z$ (and not in the channel-transverse direction); i.e. $u = u(z)$. Then we note that $dA = f_w(z)dz$, where $f_w(z)$ is some function that describes the width of the weir at any vertical position $z$, the above equation can be written as an integral over $z$; namely:

$$Q = \int_{z_{w1}}^{z_{w2}} u(z) f_w(z) dz. \tag{2}$$

We will worry about integration limits and $f_w(z)$ later. For now let us try to find an expression for $u(z)$ based on the information upstream of the weir. This problem may be considered as steady and inviscid, so we can apply Bernoulli equation to a streamline connecting two points located at arbitrary vertical positions, $z_1$ and $z_2$, in sections 1 and 2, respectively, as shown in fig. 2. This yields, for section 1:

$$z_1 + \frac{p_1(z_1)}{\rho g} + \frac{u_1^2(z_1)}{2g} \tag{3}$$

and similarly, for section 2:

$$z_2 + \frac{p_2(z_2)}{\rho g} + \frac{u_2^2(z_2)}{2g}, \tag{4}$$

where all symbols ($g$, $\rho$, $p$, etc.) have their usual meaning.

In principle, we can equate the two expressions above (i.e. assume no energy losses between sections 1 and 2) to find an expression for $u_2$ as function of all other variables for use in eq. (2); but this would not be very useful. We need to start invoking some more assumptions to simplify the problem. We will describe and discuss each assumption adopted.

First, this is open channel flow, so it is safe to assume that in section 1 pressure is hydrostatic (remember this?); namely: $p_1(z_1) = \rho g(h_1 - z_1)$. Thanks to this, we can write $u_2^2$ as:

$$u_2^2(z_2) = 2g\left(h_1 + \frac{u_1^2(z_1)}{2g} - z_2 - \frac{p_2(z_2)}{\rho g}\right). \tag{5}$$

[1] This is the definition of a *hydraulic control*: a channel feature that fixes a relationship between discharge and depth in its neighbourhood.

We could easily measure $h_1$, but this is not true for $u_1(z_1)$ and $p_2(z_2)$. Hence, the next assumption is that $u_1$ does not vary with the vertical (in other words, that the vertical profile of $u_1$ is uniform, as illustrated in fig. 2); i.e. $u_1 \neq u_1(z)$. Furthermore, the vertical distribution of $p_2(z)$ is also unknown. Here, we cannot assume hydrostatic pressure because we know that $p_2(z = P)$ must be atmospheric[2]. In fact, $p_2$ varies with $z$ in a complex way (see fig. 3), and so it is customary to assume that $p_2$ is atmospheric throughout section 2, such that it can be neglected from the analysis, with the knowledge that empirical correction coefficients will be needed to compensate for this strong assumption. Therefore, eq. (5) can be simplified to write $u_2(z_2)$ as

$$u_2(z_2) = \left[2g\left(h_1 - z_2 + \frac{u_1^2}{2g}\right)\right]^{1/2}, \tag{6}$$

which depends only on upstream variables $h_1$ and $u_1$, and $z_2$. Since $z_2$ represents any vertical position $z$ between $z = z_{w1}$ and $z = z_{w2}$, we can use eq. (6) in (2), yielding the following integral:

$$Q = \sqrt{2g}\int_{z_{w1}}^{z_{w2}} f_w(z)\left(h_1 - z + \frac{u_1^2}{2g}\right)^{1/2} dz. \tag{7}$$

Now we turn our attention to the integration limits. From fig. 2 we know that $z_{w1} = P$, but close analysis of the same figure shows that $z_{w2} \neq P + h$ (in fact, $z_{w2} < P + h$ due to contraction of the overspilling jet[3]; note also that $h_1 = P + h$). However, for simplicity we will assume that $z_{w2} = P + h$ (note that this assumption is less drastic that taking $p_2$ as atmospheric pressure). At this point, we may as well simplify our expression as much as possible, and we can do this by noting that the approach kinetic head usually represents a small component of the total head (see fig. 2), and so the term $u_1^2/(2g)$ is typically much smaller than $h_1$ and may thus be neglected. Hence, our final working integral for the *ideal* (in the sense of *idealised*) discharge through any sharp-crested weir is:

$$Q_i = \sqrt{2g}\int_{P}^{P+h=h_1} f_w(z)\,(h_1 - z)^{1/2}\,dz. \tag{8}$$

Let us now explore a couple of specific, popular cases.

### 1.1 Rectangular weir

This type of sharp-crested weir, illustrated in fig. 4, serves as the simplest example to solve eq. (8). This is because the function $f_w(z)$ describing the variation of the weir's width with the vertical is simply some constant, $b$: the width of the weir. Thus, replacing $f_w(z) = b$ in eq. (8) yields:

$$\begin{aligned} Q_i &= \sqrt{2g}b\int_{P}^{P+h=h_1} (h_1 - z)^{1/2}\,dz \\ &= -\sqrt{2g}b\left(\frac{2}{3}\right)(h_1 - z)^{3/2}\Big|_{P}^{P+h=h_1} \\ &= \frac{2}{3}b\sqrt{2g}h^{3/2}, \end{aligned} \tag{9}$$

[2]**Q:** Can you see why?

[3]This is also called *vena contracta* and is caused by the converging pattern of the approaching streamlines.

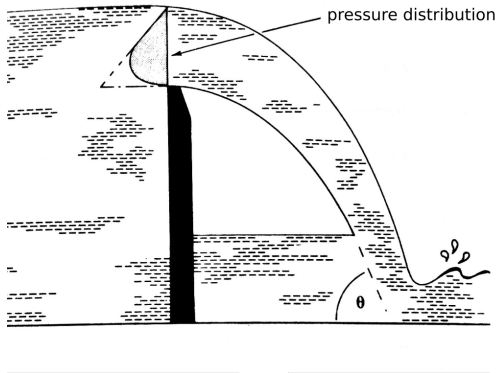


Figure 3: Pressure vertical distribution at the weir section. [Modified from Chadwick et al. 2004]

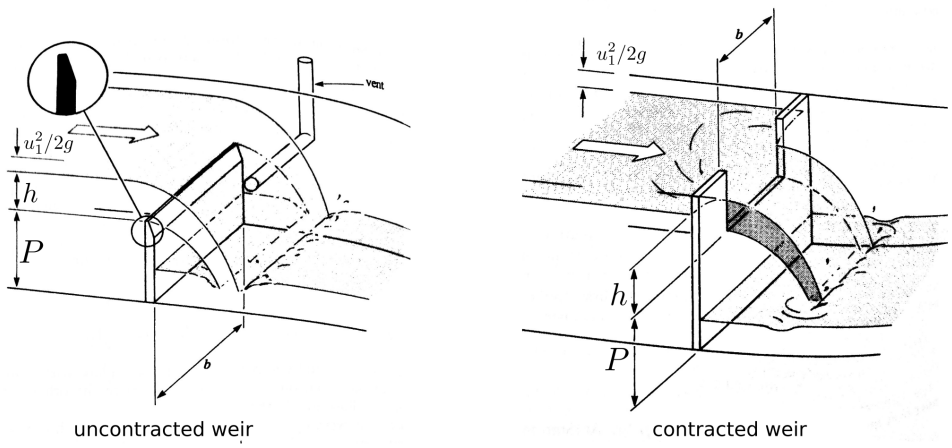


Figure 4: Rectangular sharp-crested weirs: uncontracted (left) and contracted (right). [Modified from Chadwick et al. 2004] Note the vent in the uncontracted weir, needed for air to enter this region in order to avoid the possible occurrence of sub-atmospheric pressure.

which is conventionally called *the weir equation*. Note that typically what is measured is not $h$ directly, but the upstream water depth $h_1$; naturally, the conversion is trivial since $h = h_1 - P$ and $P$ should be known *a priori*.

## 1.2 V-notched weir (Exercise)

Following a similar procedure, first show that for the triangular or v-notched weir illustrated in fig. 5, the ideal discharge is given by:

$$Q_i = \frac{8}{15}\sqrt{2g}\tan\frac{\theta}{2}h^{5/2}. \tag{10}$$

Now, in table 1 you are provided with some laboratory measurements of the depth $h_1$ (for a known discharge $Q_o$) upstream of a v-notched weir with the following characteristics: $P = 0.25$ m, and

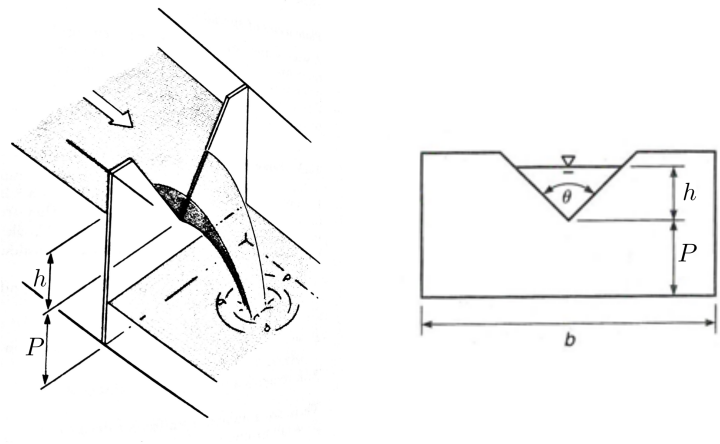


Figure 5: Triangular or v-notched weir. [Modified from Chadwick et al. 2004]

Table 1: Laboratory measurements upstream of a v-notched weir.

| $Q_o$ (m$^3$/h) | $h_1$ (m) | $C_d = Q_o/Q_i$ |
|---|---|---|
| 18 | 0.351 | |
| 67.5 | 0.428 | |
| 77.5 | 0.44 | |
| 87.5 | 0.444 | |
| 97 | 0.451 | |
| 106 | 0.464 | |
| 116 | 0.47 | |
| 125 | 0.476 | |

$\theta = 90°$. To evaluate the performance of the above equation (for the ideal discharge, $Q_i$), find the ratio $Q_o/Q_i$ (also known as the discharge coefficient, $C_d$) – you may want to use some external software (e.g. Matlab, Excel) to this end. What does the value of this ratio tell you about the assumptions employed to arrive at eq. (10)?

## 2 Concluding remarks

These notes –and the previous exercise in particular– have several purposes; namely:

1. To help you refresh your knowledge of introductory hydraulics of open channel flows
2. To illustrate how simple theories can be very useful for quickly solving (even if approximately) real-world problems (in this case, estimating the discharge from easy-to-take measurements, such as channel depth)
3. To show that, however, these theories cannot be expected to yield extremely accurate results: how much they deviate from reality will depend on the assumptions made and how these relate to the real-world conditions

Simplified theories, such as that illustrated here, were for many decades the only tools engineers had at their disposal. These tools can still be very useful today for quick, 'back-of-the-envelope' calculations. However, nowadays, thanks to significant computational power, we can afford employing fewer (and less dramatic) assumptions. For example, in the case of flow over a weir, we could solve numerically (with little to no assumptions) the general equations applicable to any flow, be it steady or unsteady, subject to *any* weir and channel geometry. The main goal of these notes is to encourage you to want to know more about said general equations, which we will be dealing with in the following weeks.

**Exercise:** An important aspect of this module is the emphasis on understanding what equations actually mean (rather than the algebraic exercise of manipulating or deriving them), where they come from, what they assume and, hence, when they can be used (by you, the engineer) reliably. Hence, to practice, read these notes again and make a list of all the assumptions adopted to arrive at the ideal discharge equation. Reflect on the validity of each assumption (do you think they always/never hold true? When do they or do they not?)

**References:**

Chadwick, A., Morfett, J. & Borthwick, M. (2004). *Hydraulics in civil and environmental engineering, 4th ed.* London: Spon.

Sotelo, G. (2006) *Hidráulica general* [General hydraulics]. Mexico: Limusa.