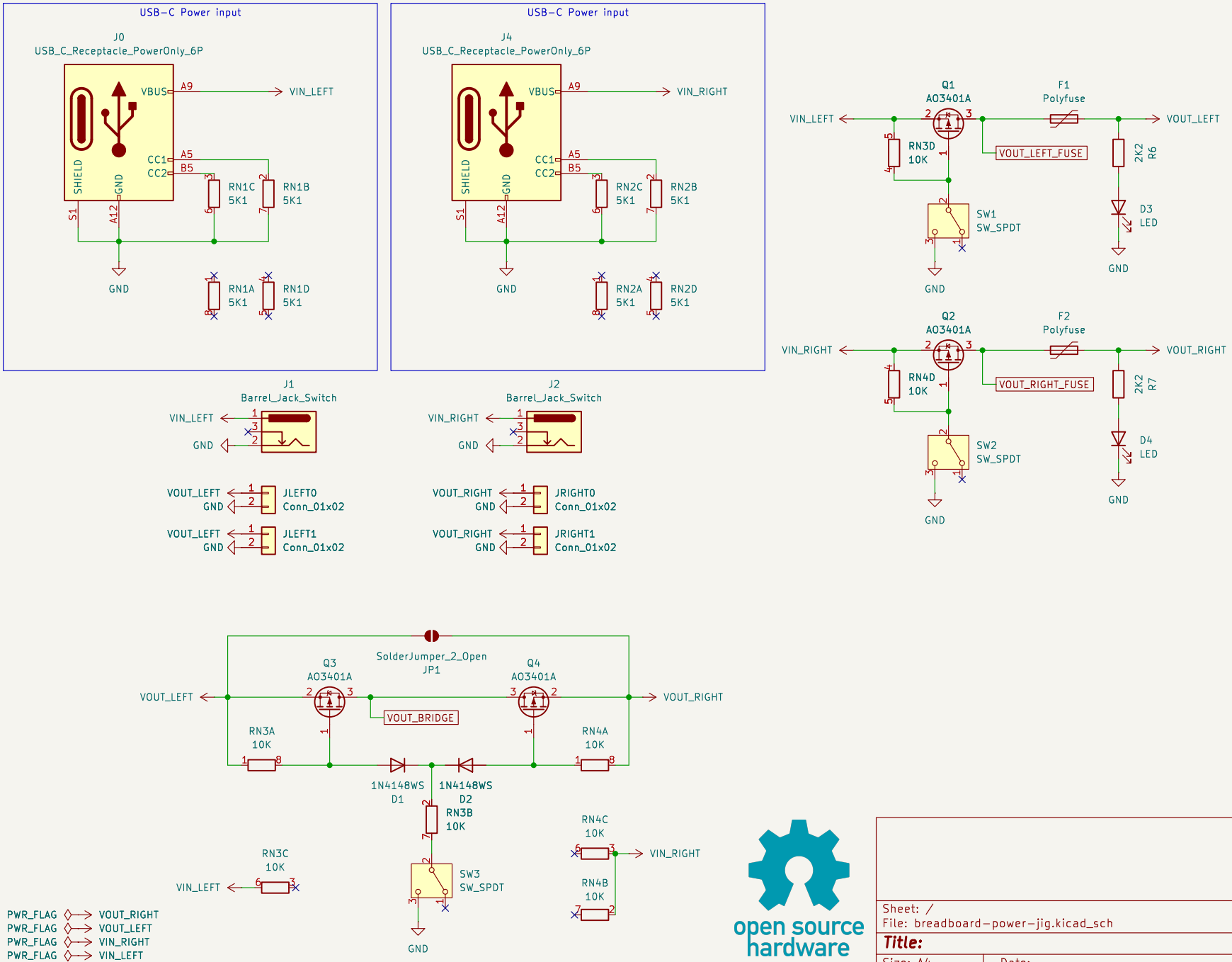

open source hardware
CERN-OHL-P v2

Sheet: /
File: breadboard-power-jig.kicad_sch

Title:

Size: A4	Date:	Rev:
KiCad E.D.A. 8.0.1		Id: 1/1