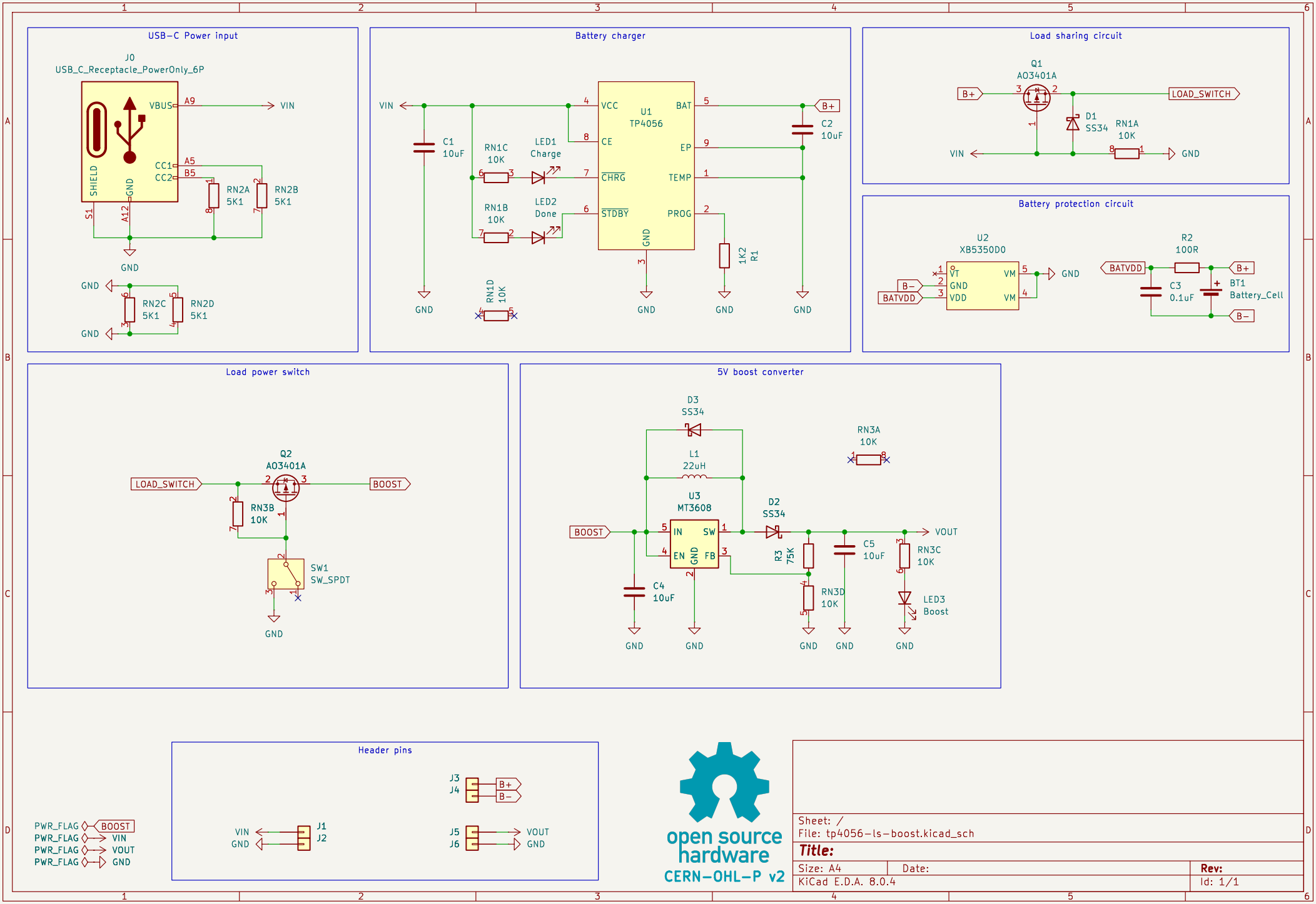
USB-C Power input
J0
USB_C_Receptacle_PowerOnly_6P
VBUS
A9
VIN
CC1
CC2
A5
B5
SHIELD
GND
S1
A12
RN2A
5K1
RN2B
5K1
GND
RN2C
5K1
RN2D
5K1
Battery charger
VIN
C1
10uF
RN1C
10K
LED1
Charge
RN1B
10K
LED2
Done
RN1D
10K
U1
TP4056
VCC
CE
CHRG
STDBY
BAT
EP
TEMP
PROG
GND
B+
C2
10uF
1K2
R1
Load sharing circuit
Q1
AO3401A
B+
LOAD_SWITCH
D1
SS34
RN1A
10K
VIN
GND
Battery protection circuit
U2
XB5350D0
VT
GND
VDD
VM
B-
BATVDD
R2
100R
C3
0.1uF
BT1
Battery_Cell
Load power switch
Q2
AO3401A
LOAD_SWITCH
BOOST
RN3B
10K
SW1
SW_SPDT
GND
5V boost converter
D3
SS34
L1
22uH
RN3A
10K
U3
MT3608
IN
SW
EN
GND
FB
D2
SS34
R3
75K
RN3D
10K
C4
10uF
C5
10uF
RN3C
10K
LED3
Boost
VOUT
Header pins
J3
J4
B+
B-
VIN
GND
J1
J2
J5
J6
VOUT
GND
PWR_FLAG
BOOST
VIN
VOUT
open source
hardware
CERN-OHL-P v2
Sheet: /
File: tp4056-ls-boost.kicad_sch
Title:
Size: A4
Date:
Rev:
KiCad E.D.A. 8.0.4
Id: 1/1