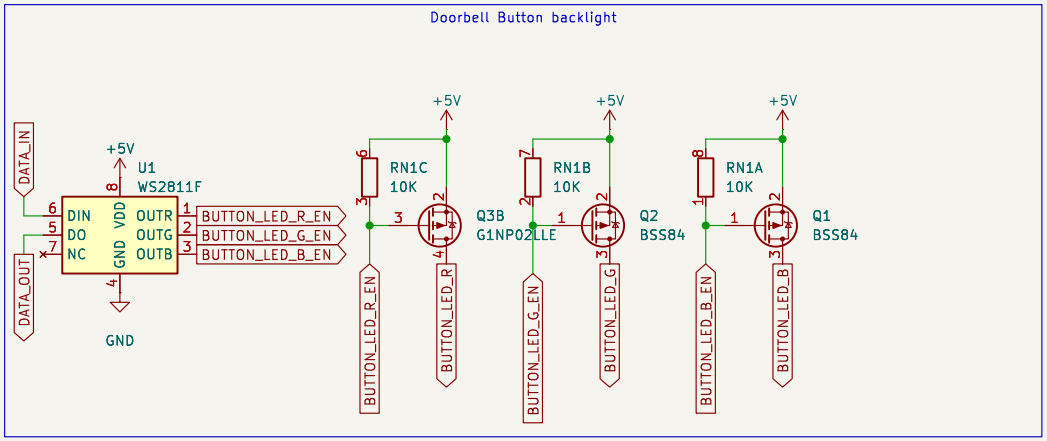

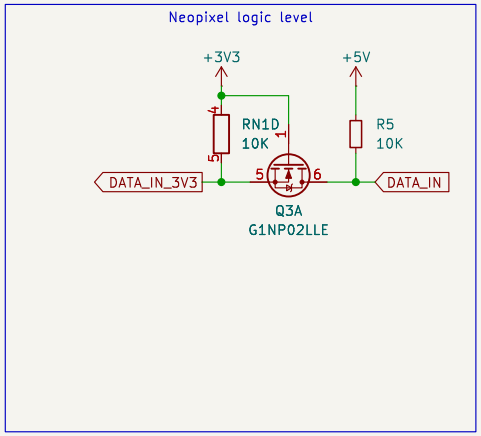

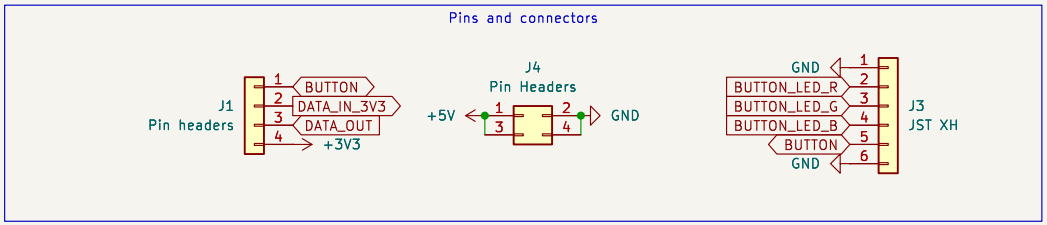

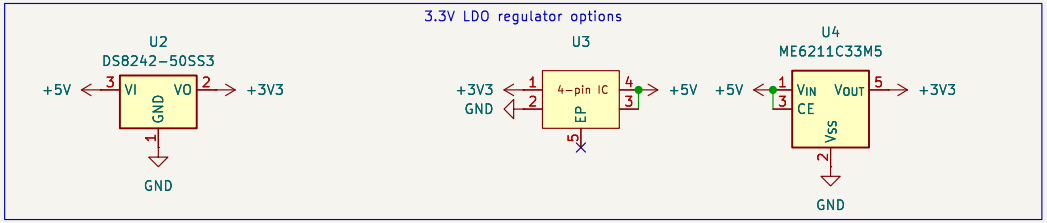

PWR_FLAG +3V3
PWR_FLAG +5V
PWR_FLAG GND

open source hardware
CERN-OHL-P v2

Sheet: /
File: esp-doorbell-button.kicad_sch

Title:

Size: A4	Date:	**Rev:**
KiCad E.D.A. 8.0.4		Id: 1/1