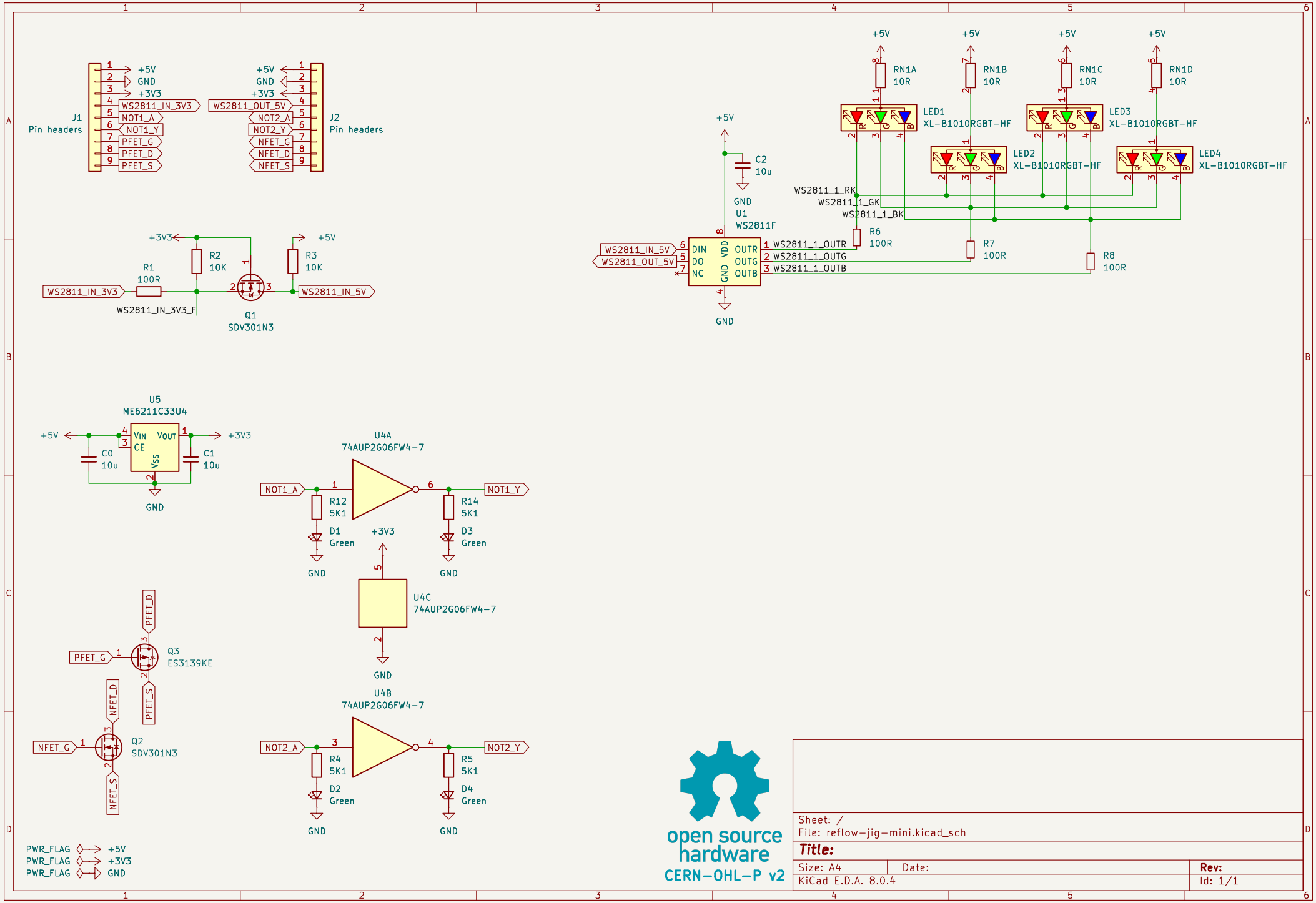
J1
Pin headers
+5V
GND
+3V3
WS2811_IN_3V3
NOT1_A
NOT1_Y
PFET_G
PFET_D
PFET_S
J2
Pin headers
WS2811_OUT_5V
NOT2_A
NOT2_Y
NFET_G
NFET_D
NFET_S
R1
100R
R2
10K
R3
10K
WS2811_IN_3V3_F
WS2811_IN_5V
Q1
SDV301N3
U5
ME6211C33U4
VIN
VOUT
CE
Vss
C0
10u
C1
10u
GND
U4A
74AUP2G06FW4-7
R12
5K1
R14
5K1
D1
Green
D3
Green
U4C
74AUP2G06FW4-7
U4B
74AUP2G06FW4-7
R4
5K1
R5
5K1
D2
Green
D4
Green
Q3
ES3139KE
Q2
SDV301N3
PWR_FLAG
RN1A
10R
RN1B
10R
RN1C
10R
RN1D
10R
LED1
XL-B1010RGBT-HF
LED2
XL-B1010RGBT-HF
LED3
XL-B1010RGBT-HF
LED4
XL-B1010RGBT-HF
C2
10u
U1
WS2811F
DIN
DO
NC
VDD
GND
OUTR
OUTG
OUTB
WS2811_1_RK
WS2811_1_GK
WS2811_1_BK
WS2811_1_OUTR
WS2811_1_OUTG
WS2811_1_OUTB
R6
100R
R7
100R
R8
100R
open source
hardware
CERN-OHL-P v2
Sheet: /
File: reflow-jig-mini.kicad_sch
Title:
Size: A4
Date:
Rev:
KiCad E.D.A. 8.0.4
Id: 1/1