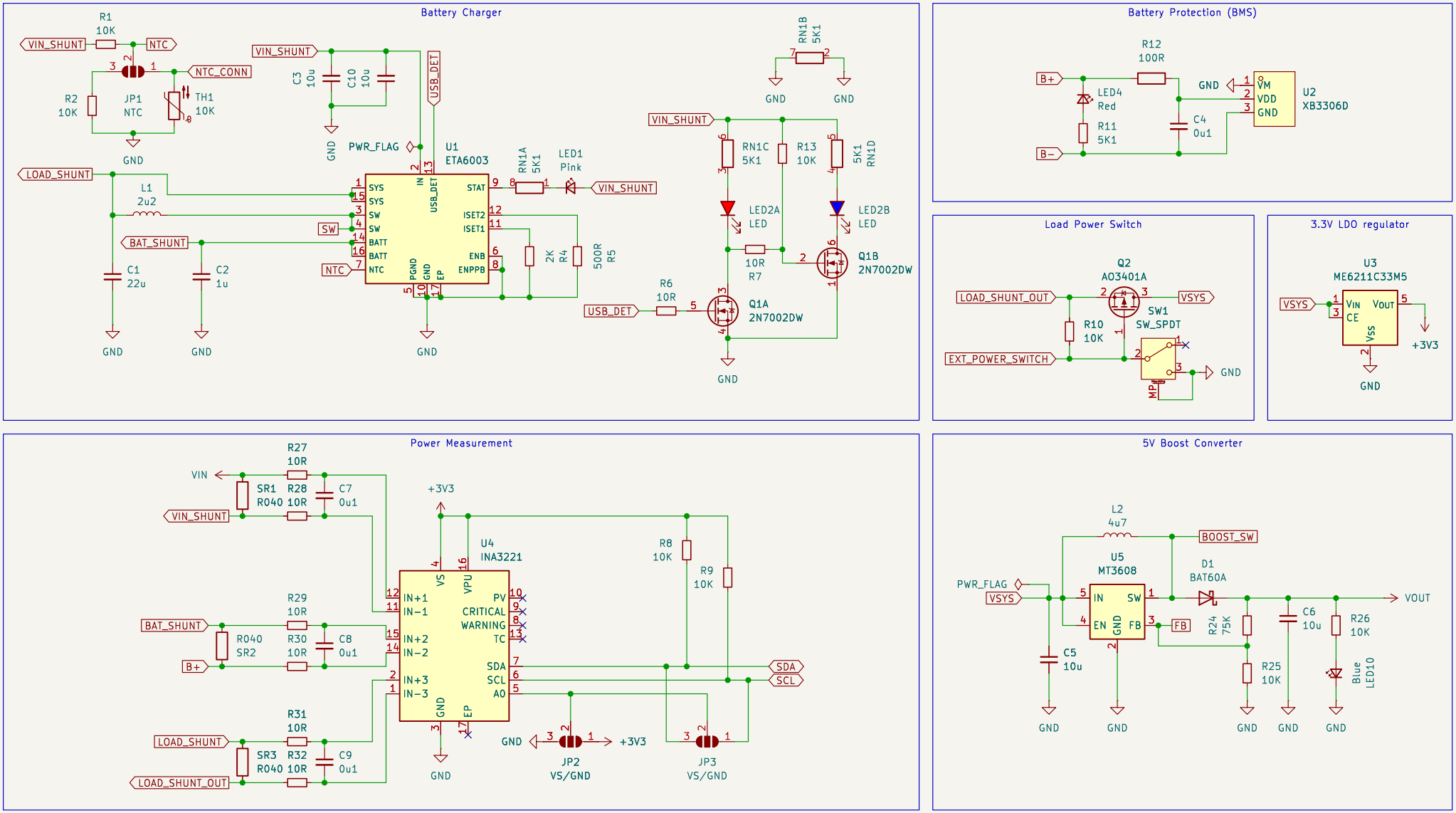
Battery Charger
R1 10K
VIN_SHUNT
NTC
NTC_CONN
R2 10K
JP1 NTC
TH1 10K
GND
LOAD_SHUNT
L1 2u2
BAT_SHUNT
C1 22u
C2 1u
C3 10u
C10 10u
USB_DET
PWR_FLAG
U1 ETA6003
SYS
SW
BATT
NTC
PGND
EP
IN
STAT
ISET2
ISET1
ENB
ENPPB
SW
RN1A 5K1
LED1 Pink
2K R4
500R R5
RN1B 5K1
RN1C 5K1
R13 10K
5K1 RN1D
LED2A LED
LED2B LED
10R R7
Q1B 2N7002DW
R6 10R
Q1A 2N7002DW
Battery Protection (BMS)
R12 100R
B+
B−
LED4 Red
R11 5K1
C4 0u1
U2 XB3306D
VM
VDD
GND
Load Power Switch
Q2 AO3401A
LOAD_SHUNT_OUT
VSYS
R10 10K
EXT_POWER_SWITCH
SW1 SW_SPDT
3.3V LDO regulator
U3 ME6211C33M5
VIN
CE
VOUT
VSS
+3V3
Power Measurement
R27 10R
VIN
SR1 R040
R28 10R
C7 0u1
+3V3
U4 INA3221
VS
VPU
IN+1
IN−1
IN+2
IN−2
IN+3
IN−3
PV
CRITICAL WARNING
TC
SDA
SCL
A0
R8 10K
R9 10K
R29 10R
BAT_SHUNT
R040 SR2
R30 10R
C8 0u1
R31 10R
LOAD_SHUNT
SR3 R040
R32 10R
C9 0u1
LOAD_SHUNT_OUT
JP2 VS/GND
JP3 VS/GND
5V Boost Converter
L2 4u7
BOOST_SW
U5 MT3608
IN
SW
EN
GND
FB
D1 BAT60A
VOUT
PWR_FLAG
VSYS
C5 10u
R24 75K
R25 10K
C6 10u
R26 10K
Blue LED10
Pins and Connectors
POWER_IN
SHUNT_POWER_IN
NTC_CONN
POWER_OUT
USB_DET
POWER_SWITCH
SCLD
SDAD
EXT_POWER_SWITCH
SCL
SDA
File: connectors.kicad_sch
PWR_FLAG VIN
PWR_FLAG VOUT
PWR_FLAG GND
open source hardware
CERN-OHL-P v2
Sheet: /
File: power-dev-eta6003-ups.kicad_sch
Title:
Size: A4
Date:
Rev:
KiCad E.D.A. 8.0.1
Id: 1/2

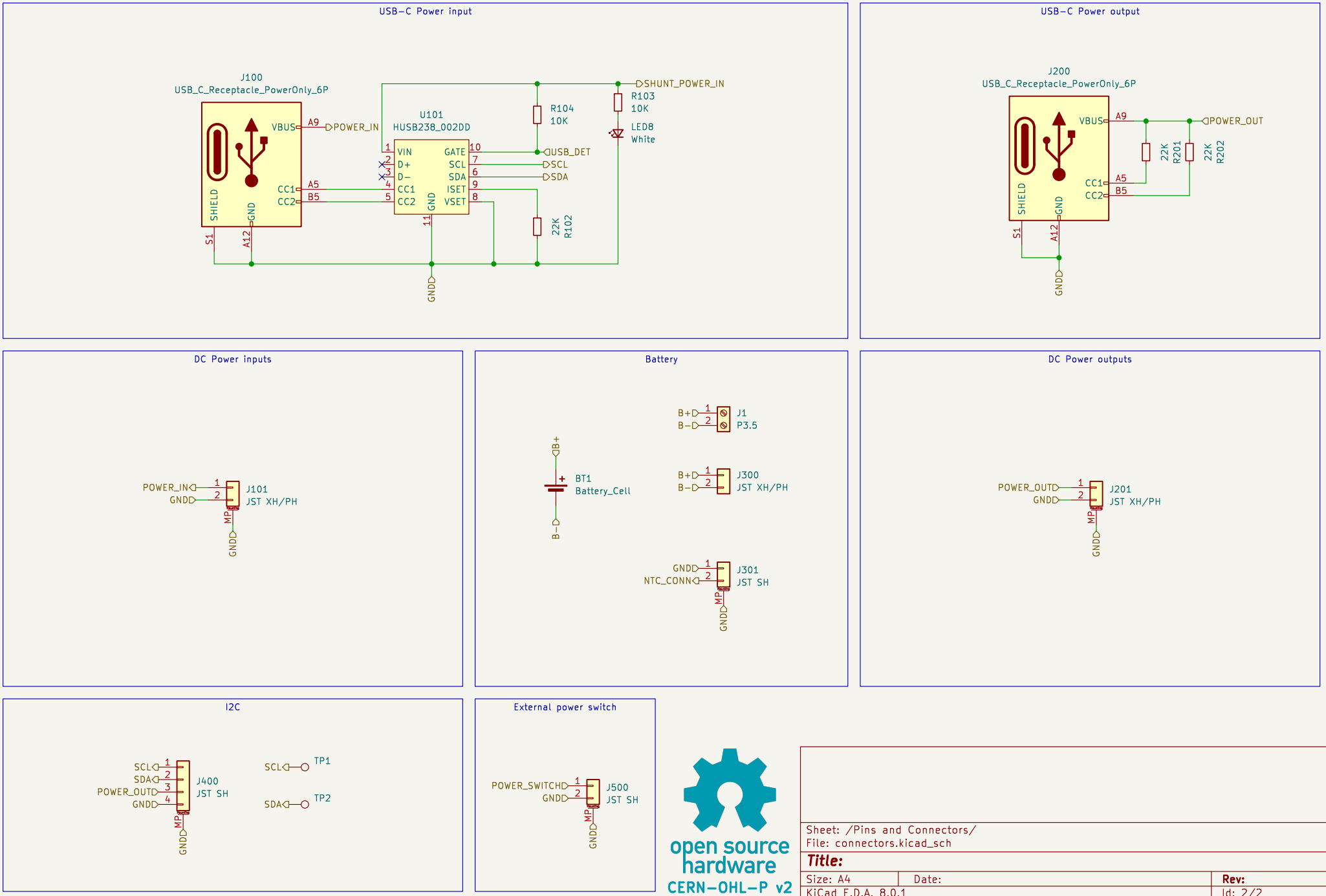
USB-C Power input
J100
USB_C_Receptacle_PowerOnly_6P
VBUS
A9
POWER_IN
CC1
CC2
A5
B5
SHIELD
GND
S1
A12
U101
HUSB238_002DD
VIN
D+
D-
CC1
CC2
GND
GATE
SCL
SDA
ISET
VSET
R104
10K
USB_DET
SCL
SDA
SHUNT_POWER_IN
R103
10K
LED8
White
22K
R102
GND
USB-C Power output
J200
USB_C_Receptacle_PowerOnly_6P
VBUS
A9
POWER_OUT
22K
R201
22K
R202
CC1
CC2
A5
B5
SHIELD
GND
S1
A12
GND
DC Power inputs
POWER_IN
GND
J101
JST XH/PH
MP
GND
Battery
B+
BT1
Battery_Cell
B-
B+
B-
J1
P3.5
B+
B-
J300
JST XH/PH
GND
NTC_CONN
J301
JST SH
MP
GND
DC Power outputs
POWER_OUT
GND
J201
JST XH/PH
MP
GND
I2C
SCL
SDA
POWER_OUT
GND
J400
JST SH
MP
GND
SCL
TP1
SDA
TP2
External power switch
POWER_SWITCH
GND
J500
JST SH
MP
GND
open source
hardware
CERN-OHL-P v2
Sheet: /Pins and Connectors/
File: connectors.kicad_sch
Title:
Size: A4
Date:
Rev:
KiCad E.D.A. 8.0.1
Id: 2/2