5V buck converter

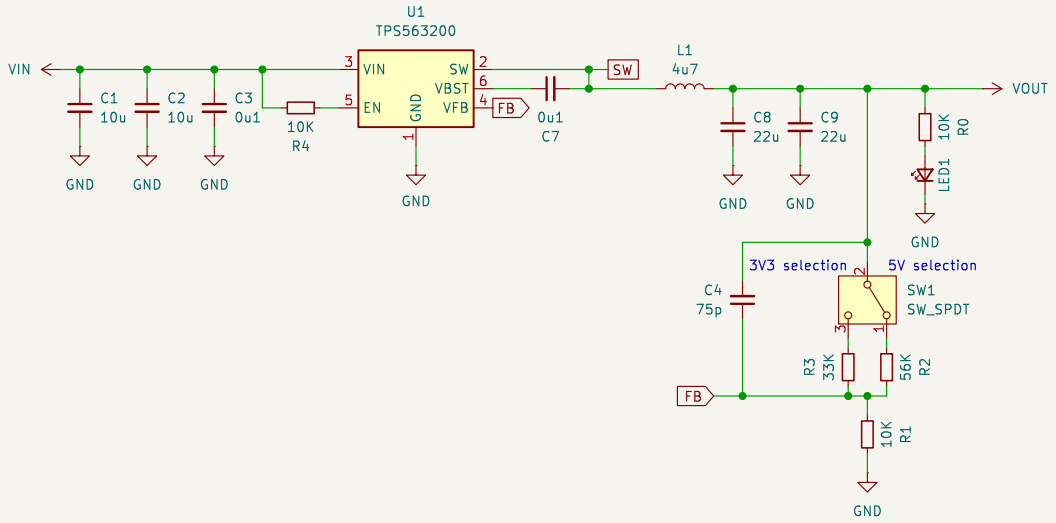

Pins and connectors

PWR_FLAG VIN
PWR_FLAG VOUT
PWR_FLAG GND

open source hardware
CERN-OHL-P v2

Sheet: /
File: buck-tps563201.kicad_sch

Title:

Size: A4	Date:	**Rev:**
KiCad E.D.A. 8.0.4		Id: 1/1