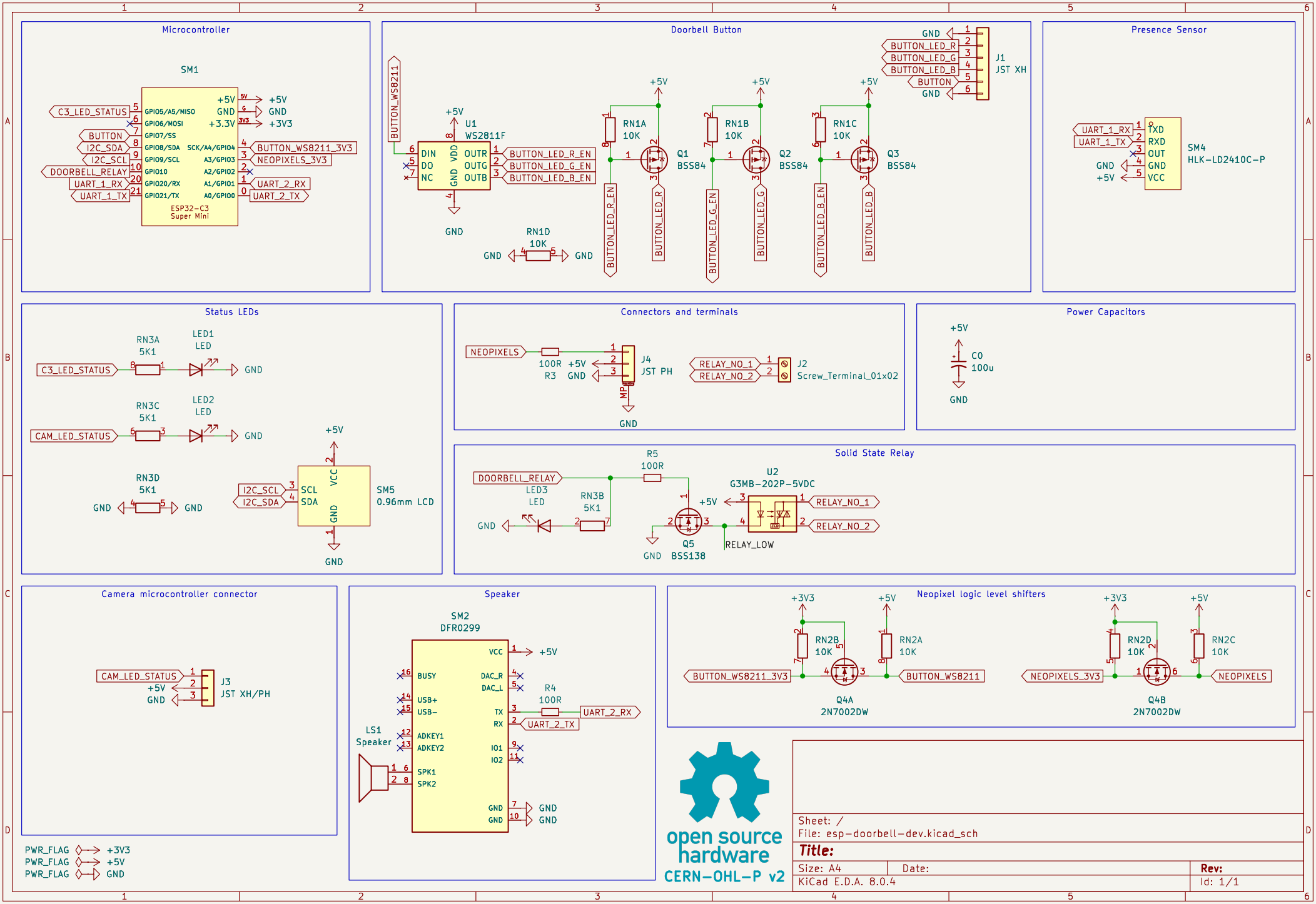
Microcontroller
SM1
ESP32-C3
Super Mini
C3_LED_STATUS
BUTTON
I2C_SDA
I2C_SCL
DOORBELL_RELAY
UART_1_RX
UART_1_TX
BUTTON_WS8211_3V3
NEOPIXELS_3V3
UART_2_RX
UART_2_TX
Doorbell Button
U1
WS2811F
BUTTON_WS8211
BUTTON_LED_R_EN
BUTTON_LED_G_EN
BUTTON_LED_B_EN
RN1A
10K
RN1B
10K
RN1C
10K
RN1D
10K
Q1
BSS84
Q2
BSS84
Q3
BSS84
J1
JST XH
BUTTON_LED_R
BUTTON_LED_G
BUTTON_LED_B
BUTTON
Presence Sensor
SM4
HLK-LD2410C-P
TXD
RXD
OUT
GND
VCC
Status LEDs
RN3A
5K1
LED1
LED
RN3C
5K1
LED2
LED
RN3D
5K1
SM5
0.96mm LCD
SCL
SDA
VCC
Connectors and terminals
NEOPIXELS
100R
R3
J4
JST PH
RELAY_NO_1
RELAY_NO_2
J2
Screw_Terminal_01x02
Power Capacitors
C0
100u
Solid State Relay
DOORBELL_RELAY
R5
100R
LED3
LED
RN3B
5K1
U2
G3MB-202P-5VDC
Q5
BSS138
RELAY_LOW
Camera microcontroller connector
CAM_LED_STATUS
J3
JST XH/PH
Speaker
SM2
DFR0299
LS1
Speaker
BUSY
USB+
USB-
ADKEY1
ADKEY2
SPK1
SPK2
DAC_R
DAC_L
TX
RX
IO1
IO2
R4
100R
Neopixel logic level shifters
RN2B
10K
RN2A
10K
RN2D
10K
RN2C
10K
Q4A
2N7002DW
Q4B
2N7002DW
BUTTON_WS8211_3V3
BUTTON_WS8211
NEOPIXELS_3V3
NEOPIXELS
PWR_FLAG
+3V3
+5V
GND
open source
hardware
CERN-OHL-P v2
Sheet: /
File: esp-doorbell-dev.kicad_sch
Title:
Size: A4
Date:
Rev:
KiCad E.D.A. 8.0.4
Id: 1/1