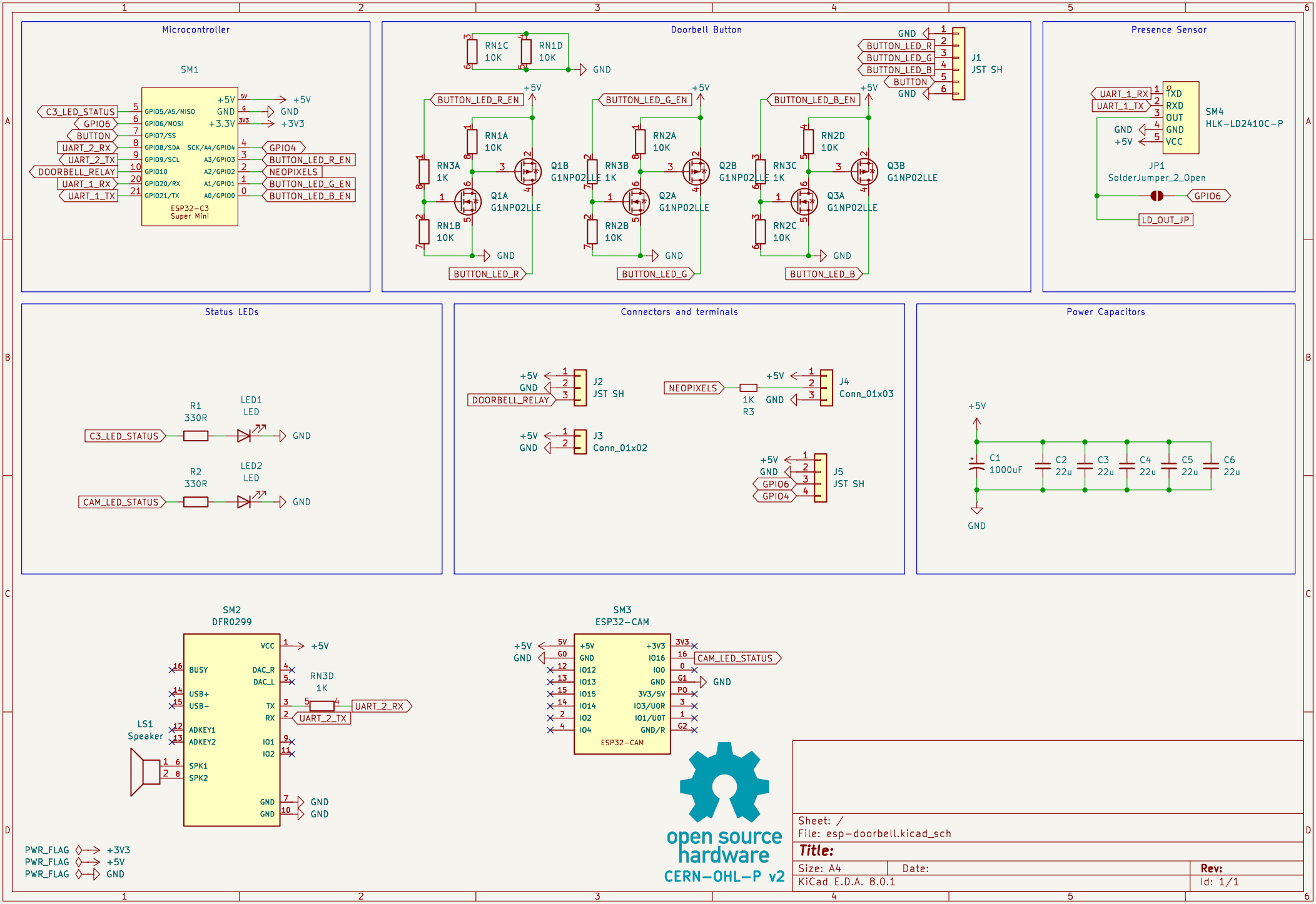
Microcontroller
SM1
ESP32-C3
Super Mini
C3_LED_STATUS
GPIO6
BUTTON
UART_2_RX
UART_2_TX
DOORBELL_RELAY
UART_1_RX
UART_1_TX
GPIO5/A5/MISO
GPIO6/MOSI
GPIO7/SS
GPIO8/SDA
GPIO9/SCL
GPIO10
GPIO20/RX
GPIO21/TX
SCK/A4/GPIO4
A3/GPIO3
A2/GPIO2
A1/GPIO1
A0/GPIO0
+5V
GND
+3.3V
+3V3
GPIO4
BUTTON_LED_R_EN
NEOPIXELS
BUTTON_LED_G_EN
BUTTON_LED_B_EN
Doorbell Button
RN1C 10K
RN1D 10K
RN1A 10K
RN1B 10K
RN2A 10K
RN2B 10K
RN2D 10K
RN2C 10K
RN3A 1K
RN3B 1K
RN3C 1K
Q1A G1NP02LLE
Q1B G1NP02LLE
Q2A G1NP02LLE
Q2B G1NP02LLE
Q3A G1NP02LLE
Q3B G1NP02LLE
BUTTON_LED_R
BUTTON_LED_G
BUTTON_LED_B
J1
JST SH
Presence Sensor
SM4
HLK-LD2410C-P
TXD
RXD
OUT
GND
VCC
JP1
SolderJumper_2_Open
LD_OUT_JP
Status LEDs
R1 330R
LED1 LED
R2 330R
LED2 LED
Connectors and terminals
J2
JST SH
DOORBELL_RELAY
J3
Conn_01x02
J4
Conn_01x03
1K R3
J5
JST SH
Power Capacitors
C1 1000uF
C2 22u
C3 22u
C4 22u
C5 22u
C6 22u
SM2
DFR0299
VCC
BUSY
DAC_R
DAC_L
USB+
USB-
TX
RX
ADKEY1
ADKEY2
IO1
IO2
SPK1
SPK2
RN3D 1K
LS1
Speaker
SM3
ESP32-CAM
+3V3
IO16
IO0
3V3/5V
IO3/U0R
IO1/U0T
GND/R
IO12
IO13
IO15
IO14
IO2
IO4
PWR_FLAG
open source hardware
CERN-OHL-P v2
Sheet: /
File: esp-doorbell.kicad_sch
Title:
Size: A4
Date:
Rev:
KiCad E.D.A. 8.0.1
Id: 1/1