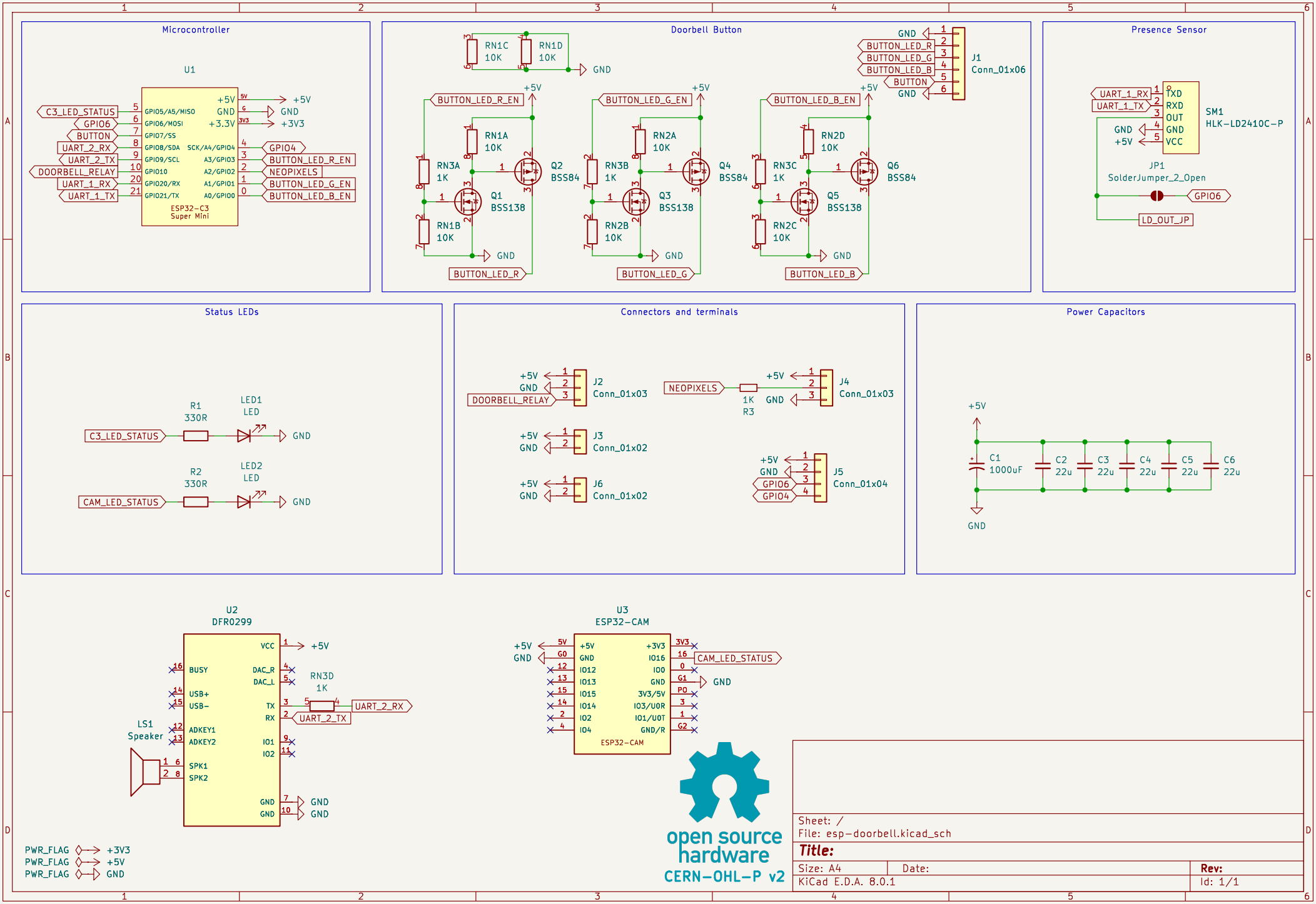
Microcontroller
U1
ESP32-C3
Super Mini
C3_LED_STATUS
GPIO6
BUTTON
UART_2_RX
UART_2_TX
DOORBELL_RELAY
UART_1_RX
UART_1_TX
GPIO4
BUTTON_LED_R_EN
NEOPIXELS
BUTTON_LED_G_EN
BUTTON_LED_B_EN
Doorbell Button
RN1C 10K
RN1D 10K
RN1A 10K
RN1B 10K
RN3A 1K
Q1 BSS138
Q2 BSS84
RN2A 10K
RN2B 10K
RN3B 1K
Q3 BSS138
Q4 BSS84
RN2D 10K
RN2C 10K
RN3C 1K
Q5 BSS138
Q6 BSS84
BUTTON_LED_R
BUTTON_LED_G
BUTTON_LED_B
J1 Conn_01x06
Presence Sensor
SM1 HLK-LD2410C-P
JP1 SolderJumper_2_Open
LD_OUT_JP
Status LEDs
R1 330R
LED1 LED
R2 330R
LED2 LED
Connectors and terminals
J2 Conn_01x03
J3 Conn_01x02
J6 Conn_01x02
J4 Conn_01x03
J5 Conn_01x04
R3 1K
Power Capacitors
C1 1000uF
C2 22u
C3 22u
C4 22u
C5 22u
C6 22u
U2 DFR0299
LS1 Speaker
RN3D 1K
U3 ESP32-CAM
PWR_FLAG +3V3
PWR_FLAG +5V
PWR_FLAG GND
open source hardware
CERN-OHL-P v2
Sheet: /
File: esp-doorbell.kicad_sch
Title:
Size: A4
Date:
Rev:
KiCad E.D.A. 8.0.1
Id: 1/1