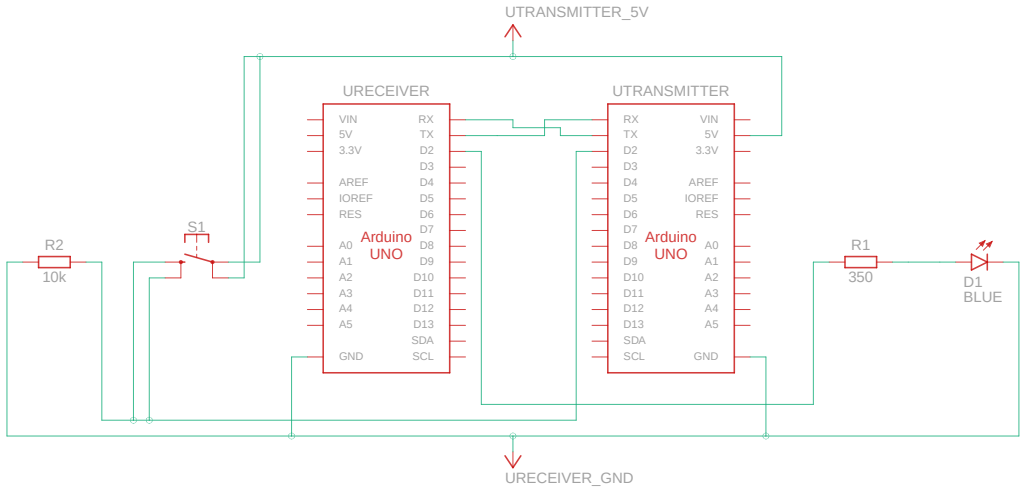

Made with Tinkercad®

Title: Arduino Serial Communication	
Date: 3/16/2025, 10:10:03 PM	Sheet: 1/1