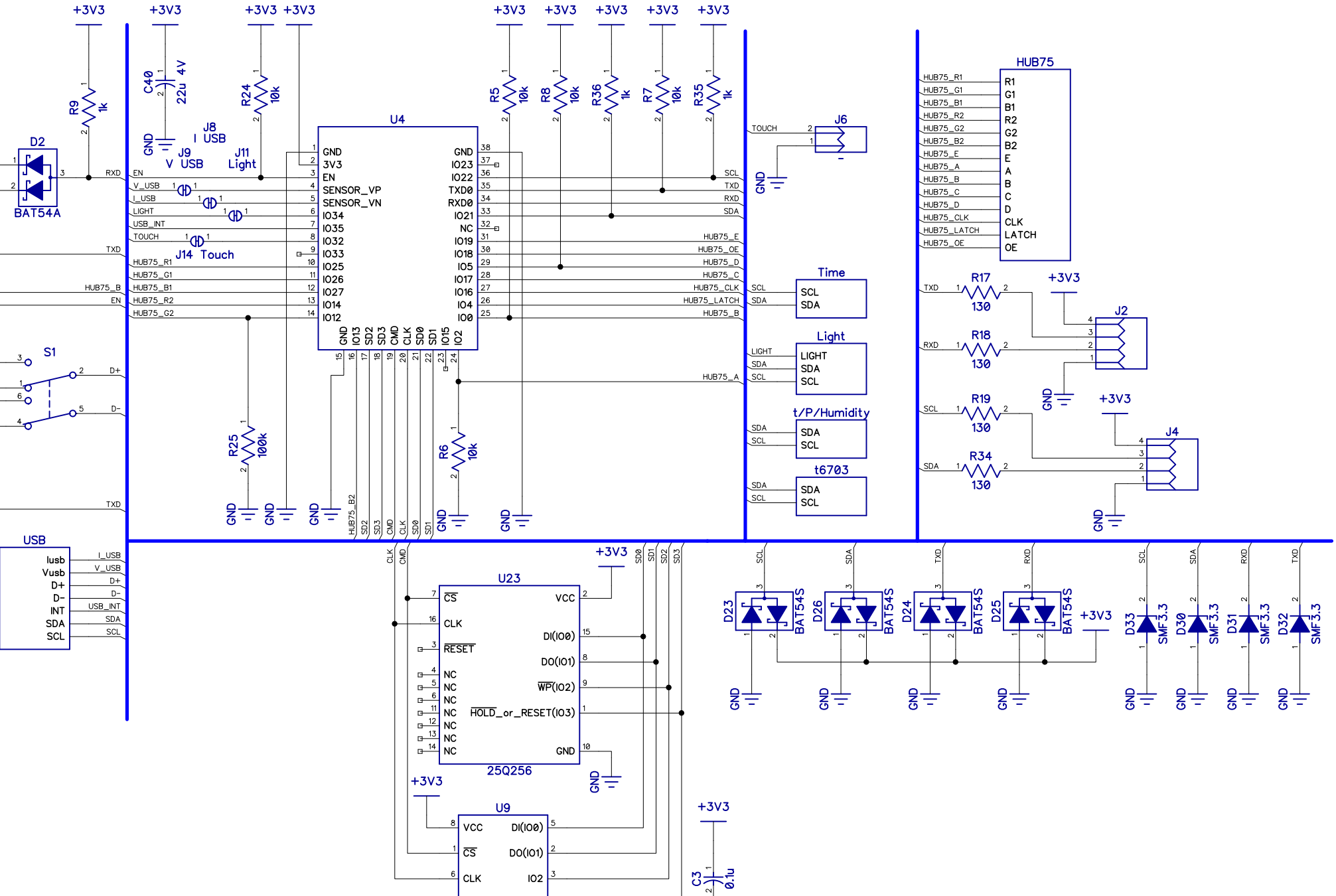
+3V3
R9 1k
D2
BAT54A
C40 22u 4V
GND
J8 I USB
J9 V USB
J11 Light
R24 10k
U4
GND
3V3
EN
SENSOR_VP
SENSOR_VN
IO34
IO35
IO32
IO33
IO25
IO26
IO27
IO14
IO12
GND
IO13
SD2
SD3
CMD
CLK
SD0
SD1
IO15
IO2
GND
IO23
IO22
TXD0
RXD0
IO21
NC
IO19
IO18
IO5
IO17
IO16
IO4
IO0
J14 Touch
R5 10k
R8 10k
R36 1k
R7 10k
R35 1k
J6
Time
Light
t/P/Humidity
t6703
HUB75
R17 130
R18 130
R19 130
R34 130
J2
J4
S1
R25 100k
R6 10k
USB
Iusb
Vusb
D+
D-
INT
SDA
SCL
U23
CS
CLK
RESET
NC
DI(IO0)
DO(IO1)
WP(IO2)
HOLD_or_RESET(IO3)
VCC
25Q256
U9
C3 0.1u
D23
D26
D24
D25
BAT54S
D33
D30
D31
D32
SMF3.3

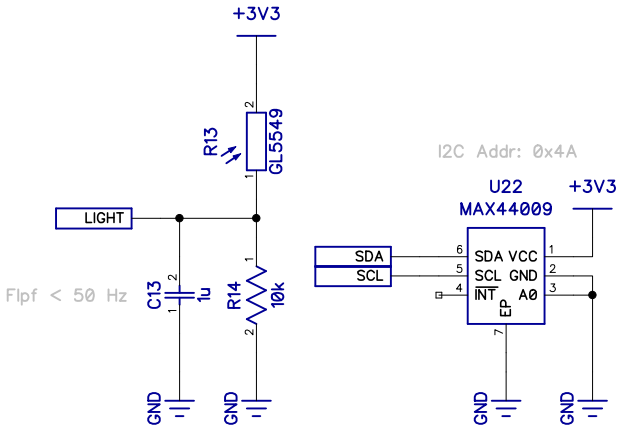
+3V3
R13
GL5549
LIGHT
Flpf < 50 Hz
C13
1u
R14
10k
GND
GND


I2C Addr: 0x4A
U22
MAX44009
+3V3
SDA
SCL
SDA VCC
SCL GND
INT A0
EP
GND
GND

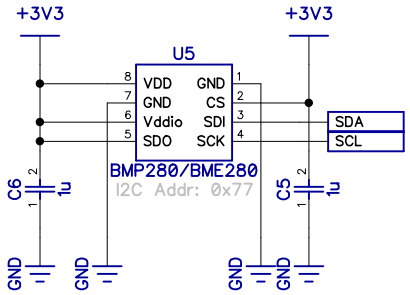
+3V3
+3V3
U5
VDD
GND
Vddio
SDO
GND
CS
SDI
SCK
8
7
6
5
1
2
3
4
SDA
SCL
BMP280/BME280
I2C Addr: 0x77
C6
1u
C5
1u
GND
GND
GND
GND

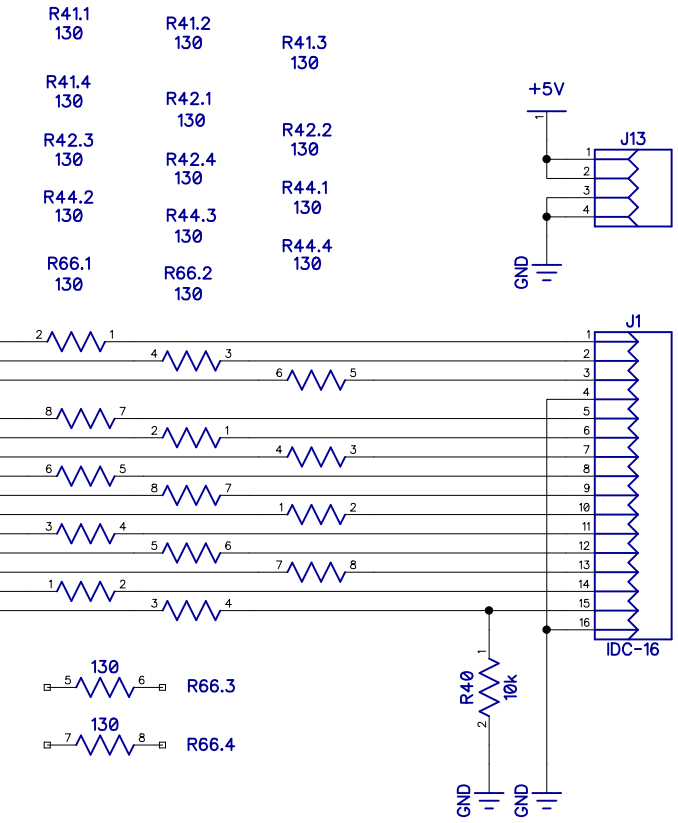
R41.1
130
R41.2
130
R41.3
130
R41.4
130
R42.1
130
R42.2
130
R42.3
130
R42.4
130
R44.1
130
R44.2
130
R44.3
130
R44.4
130
R66.1
130
R66.2
130
+5V
J13
GND
J1
IDC-16
R40
10k
130
R66.3
130
R66.4
GND
GND

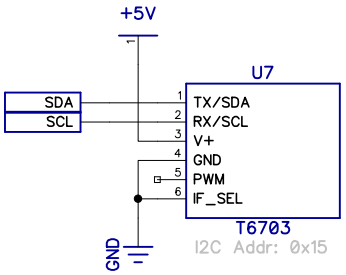
+5V
U7
SDA
SCL
1
2
3
4
5
6
TX/SDA
RX/SCL
V+
GND
PWM
IF_SEL
T6703
I2C Addr: 0x15
GND

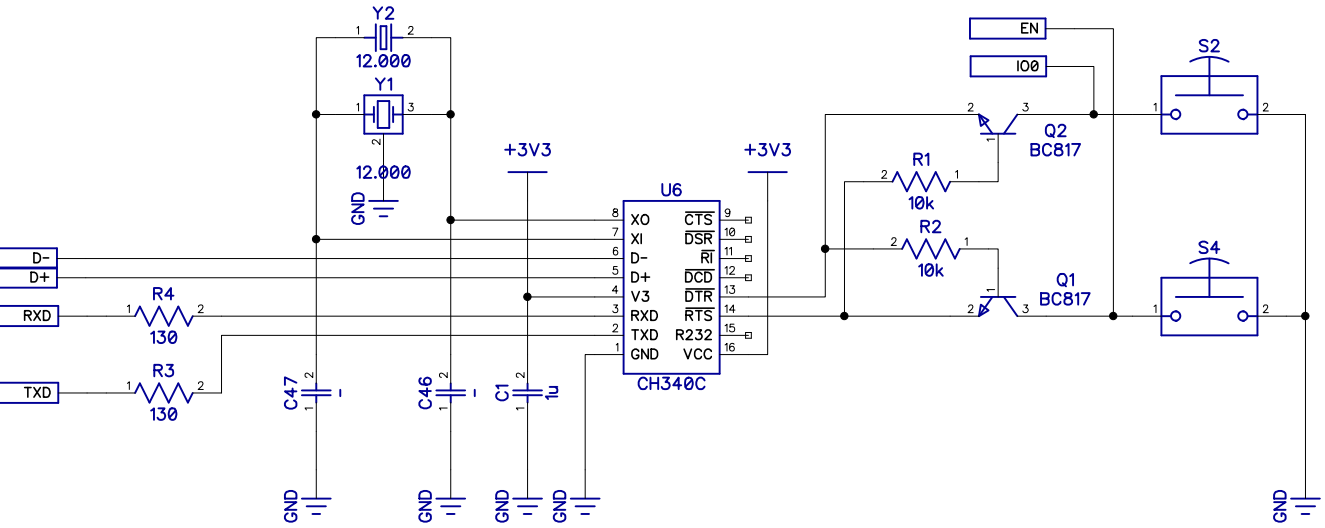
Y2
12.000
Y1
12.000
GND
+3V3
+3V3
U6
XO
XI
D-
D+
V3
RXD
TXD
GND
CTS
DSR
RI
DCD
DTR
RTS
R232
VCC
CH340C
D-
D+
RXD
TXD
R4
130
R3
130
C47
C46
C1
1u
GND
GND
GND
GND
EN
IO0
R1
10k
R2
10k
Q2
BC817
Q1
BC817
S2
S4
GND

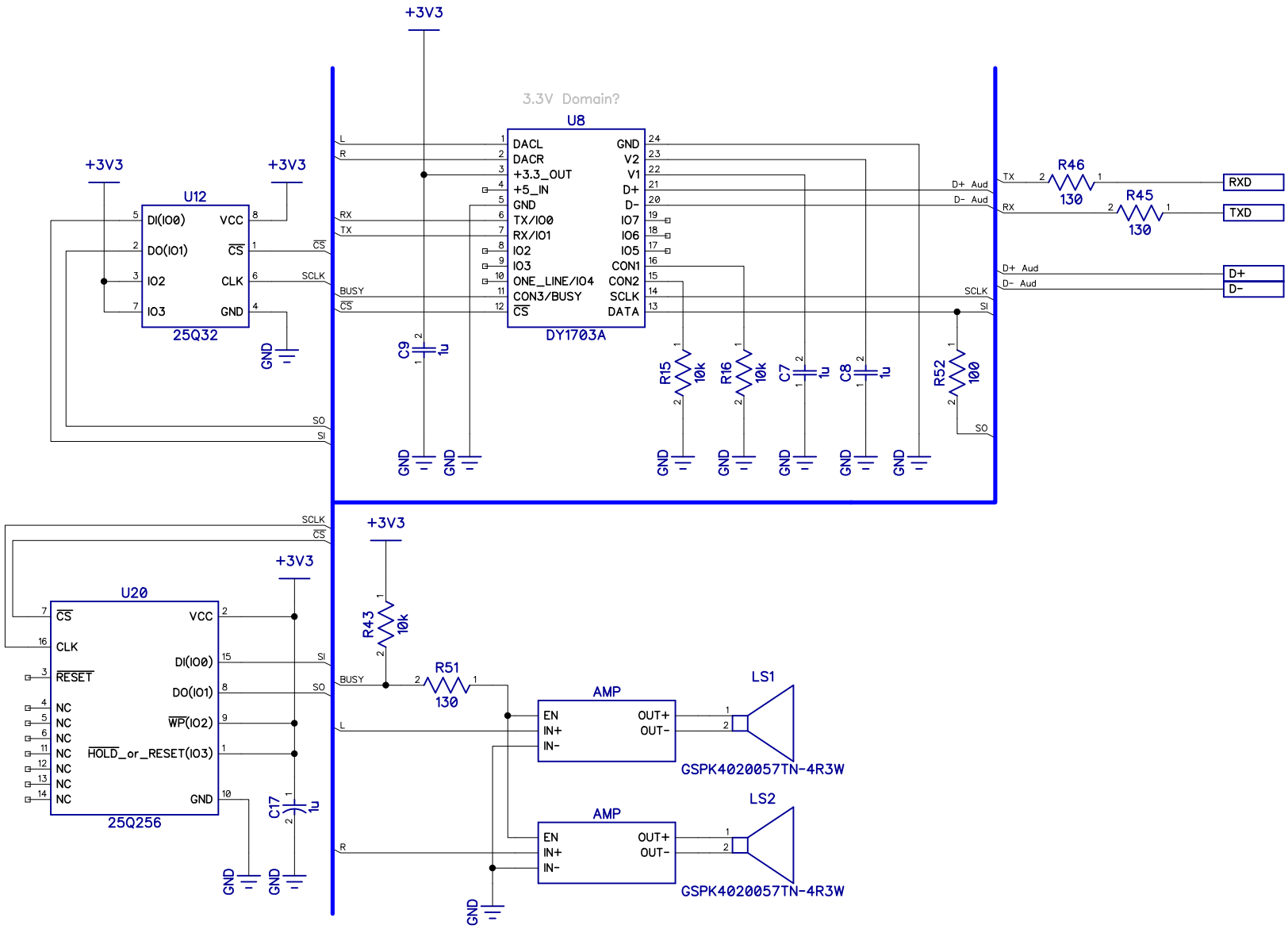
3.3V Domain?
U8
DACL
DACR
+3.3_OUT
+5_IN
GND
TX/IO0
RX/IO1
IO2
IO3
ONE_LINE/IO4
CON3/BUSY
CS
GND
V2
V1
D+
D-
IO7
IO6
IO5
CON1
CON2
SCLK
DATA
DY1703A
U12
DI(IO0)
DO(IO1)
IO2
IO3
VCC
CS
CLK
GND
25Q32
+3V3
GND
C9
1u
R15
10k
R16
10k
C7
1u
C8
1u
R52
100
R46
130
R45
130
RXD
TXD
D+
D-
D+ Aud
D- Aud
TX
RX
SCLK
SI
SO
BUSY
L
R
U20
CS
CLK
RESET
NC
DI(IO0)
DO(IO1)
WP(IO2)
HOLD_or_RESET(IO3)
VCC
GND
25Q256
C17
1u
R43
10k
R51
130
AMP
EN
IN+
IN-
OUT+
OUT-
LS1
LS2
GSPK4020057TN-4R3W

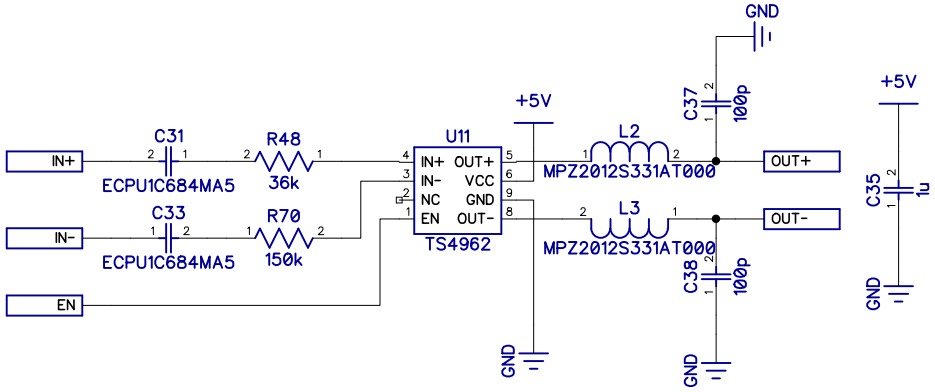
IN+
IN-
EN
C31
ECPU1C684MA5
C33
ECPU1C684MA5
R48
36k
R70
150k
U11
IN+
IN-
NC
EN
OUT+
VCC
GND
OUT-
TS4962
+5V
GND
L2
MPZ2012S331AT000
L3
MPZ2012S331AT000
C37
100p
C38
100p
OUT+
OUT-
+5V
C35
1u
GND

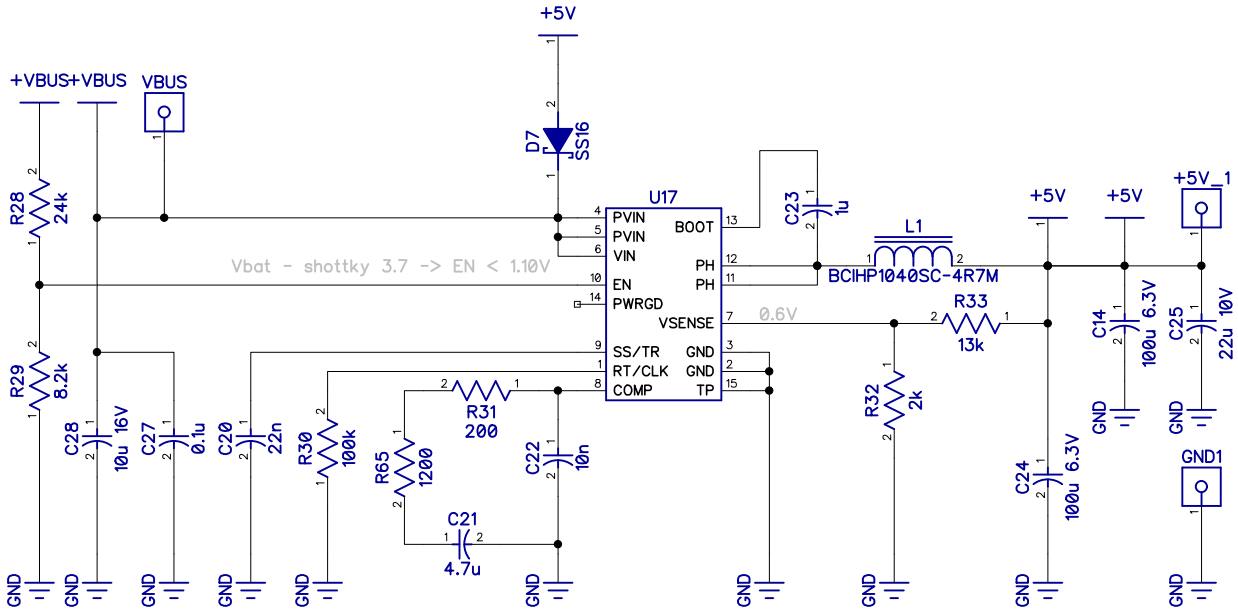
+5V
+VBUS
+VBUS
VBUS
D7
SS16
R28
24k
U17
PVIN
PVIN
VIN
EN
PWRGD
SS/TR
RT/CLK
COMP
BOOT
PH
PH
VSENSE
GND
GND
TP
C23
1u
L1
BCIHP1040SC-4R7M
+5V
+5V
+5V_1
Vbat - shottky 3.7 -> EN < 1.10V
0.6V
R33
13k
C14
100u 6.3V
C25
22u 10V
R29
8.2k
R31
200
R32
2k
C28
10u 16V
C27
0.1u
C20
22n
R30
100k
R65
1200
C22
10n
C21
4.7u
C24
100u 6.3V
GND1
GND

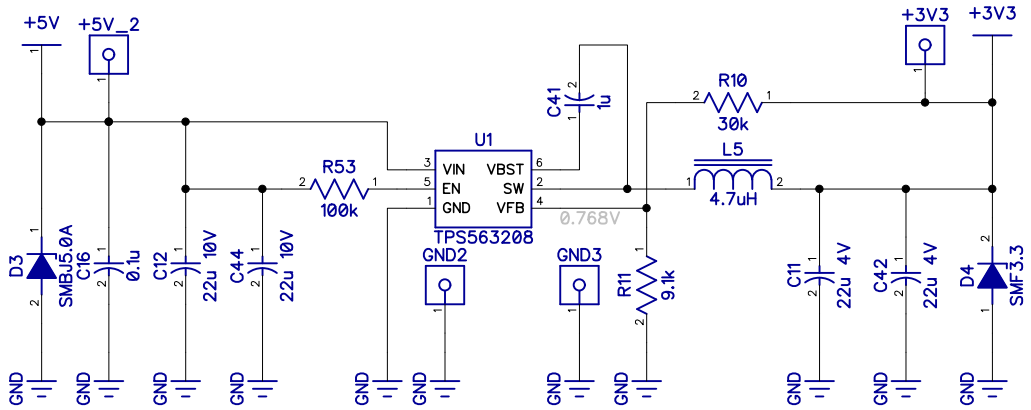
+5V
+5V_2
+3V3
+3V3
U1
VIN
EN
GND
VBST
SW
VFB
TPS563208
R53
100k
R10
30k
L5
4.7uH
C41
1u
0.768V
D3
SMBJ5.0A
C16
0.1u
C12
22u 10V
C44
22u 10V
GND2
GND3
R11
9.1k
C11
22u 4V
C42
22u 4V
D4
SMF3.3
GND