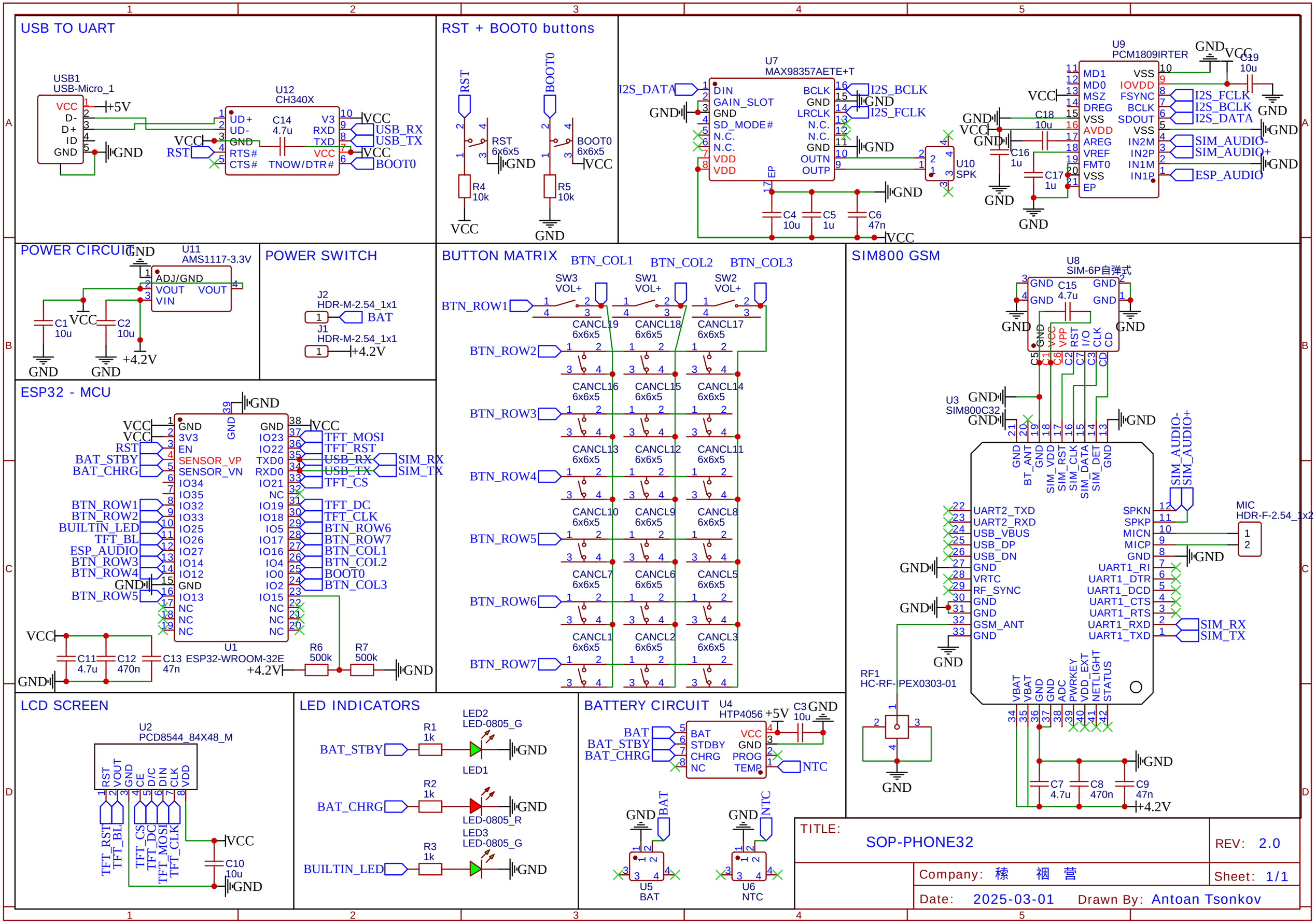
USB TO UART
USB1
USB-Micro_1
U12
CH340X
C14
4.7u
TNOW/DTR#
RST + BOOT0 buttons
RST
BOOT0
6x6x5
R4
10k
R5
10k
U7
MAX98357AETE+T
I2S_DATA
I2S_BCLK
I2S_FCLK
U10
SPK
U9
PCM1809IRTER
C19
10u
C18
10u
C16
1u
C17
1u
I2S_FCLK
I2S_BCLK
I2S_DATA
SIM_AUDIO-
SIM_AUDIO+
ESP_AUDIO
C4
10u
C5
1u
C6
47n
POWER CIRCUIT
U11
AMS1117-3.3V
ADJ/GND
VOUT
VIN
C1
10u
C2
10u
+4.2V
POWER SWITCH
J2
HDR-M-2.54_1x1
BAT
J1
HDR-M-2.54_1x1
+4.2V
BUTTON MATRIX
BTN_COL1
BTN_COL2
BTN_COL3
SW3
VOL+
SW1
VOL+
SW2
VOL+
BTN_ROW1
BTN_ROW2
BTN_ROW3
BTN_ROW4
BTN_ROW5
BTN_ROW6
BTN_ROW7
CANCL19
CANCL18
CANCL17
CANCL16
CANCL15
CANCL14
CANCL13
CANCL12
CANCL11
CANCL10
CANCL9
CANCL8
CANCL7
CANCL6
CANCL5
CANCL1
CANCL2
CANCL3
SIM800 GSM
U8
SIM-6P自弹式
C15
4.7u
U3
SIM800C32
UART2_TXD
UART2_RXD
USB_VBUS
USB_DP
USB_DN
VRTC
RF_SYNC
GSM_ANT
SPKN
SPKP
MICN
MICP
UART1_RI
UART1_DTR
UART1_DCD
UART1_CTS
UART1_RTS
UART1_RXD
UART1_TXD
SIM_AUDIO-
SIM_AUDIO+
MIC
HDR-F-2.54_1x2
RF1
HC-RF-PEX0303-01
C7
4.7u
C8
470n
C9
47n
ESP32 - MCU
U1
ESP32-WROOM-32E
VCC
RST
BAT_STBY
BAT_CHRG
SENSOR_VP
SENSOR_VN
BTN_ROW1
BTN_ROW2
BUILTIN_LED
TFT_BL
ESP_AUDIO
BTN_ROW3
BTN_ROW4
BTN_ROW5
TFT_MOSI
TFT_RST
USB_RX
USB_TX
TFT_CS
TFT_DC
TFT_CLK
BTN_ROW6
BTN_ROW7
BTN_COL1
BTN_COL2
BOOT0
BTN_COL3
SIM_RX
SIM_TX
C11
4.7u
C12
470n
C13
47n
R6
500k
R7
500k
LCD SCREEN
U2
PCD8544_84X48_M
RST
VOUT
GND
CE
D/C
DIN
CLK
VDD
TFT_RST
TFT_BL
TFT_CS
TFT_DC
TFT_MOSI
TFT_CLK
C10
10u
LED INDICATORS
BAT_STBY
BAT_CHRG
BUILTIN_LED
R1
1k
R2
1k
R3
1k
LED2
LED-0805_G
LED1
LED-0805_R
LED3
LED-0805_G
BATTERY CIRCUIT
U4
HTP4056
BAT
STDBY
CHRG
NC
VCC
GND
PROG
TEMP
NTC
C3
10u
U5
BAT
U6
NTC
TITLE:
SOP-PHONE32
REV: 2.0
Company: 稑 裀 营
Sheet: 1/1
Date: 2025-03-01
Drawn By: Antoan Tsonkov