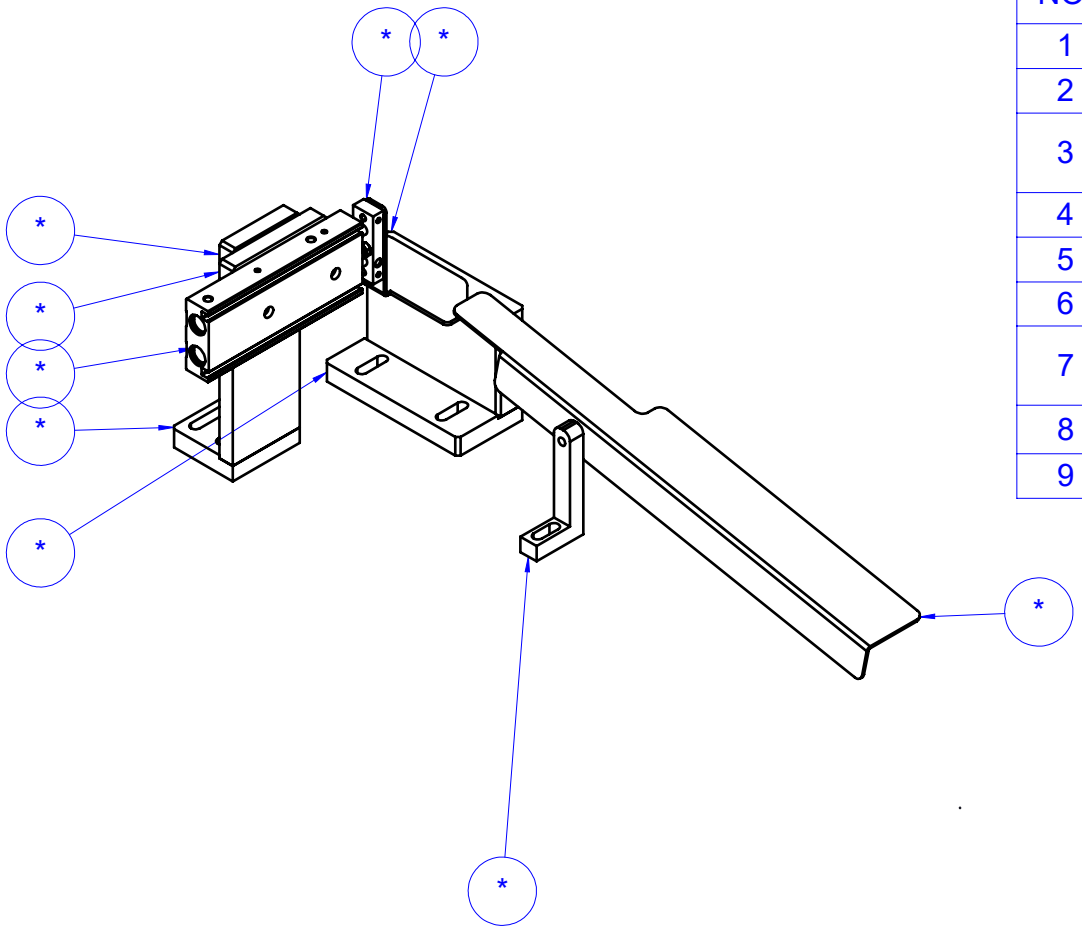

ITEM NO.	PART NUMBER	Description	QTY.
1	6298011001	MONTAJ PARCASI	1
2	6298011002	DESTEK PLAKAS	1
3	6298011003	PISTON BAGLAMA PLAKASI	1
4	PISTON-TR10X60S	PISTON (TR10X60S)	1
5	6298011004	PISTON ITME SACI	1
6	6298011005	DESTEKLEME PARCASI	1
7	6298011006	LASTIK DESTEKLEME SACI	1
8	6298011007	ALT BAGLAMA PLAKASO	1
9	6298011008	DESTEK PLAKASI	1

Parça Kodu:	**6298011000**	Ü.Kodu:		Ü.Adet:	
Parça Adı:	**LASTIK ITME SETI SOL**			Vers.:	
Kaplama Şekli:	/	Hammadde Adı:		*GENEL TOLERANS*	
Isıl İşlem:	/ **HRC**	Sip. Ölçüsü:		*DIN 7168 m T*	
SON KAYIT:	*10 Ekim 2020 Cumartesi 00:14:12*	Ağırlık:	**1.178**	*ÖLÇEK* *1:5*	*A4*

D:\YENİLERRr\plane-mask-making-machine-one-drag-two-production-line-1.snapshot.3\Plane Mask Making Machine(One Drag Two Production Line)\Plane Mask Making Machine(One Drag Two Production Line)\