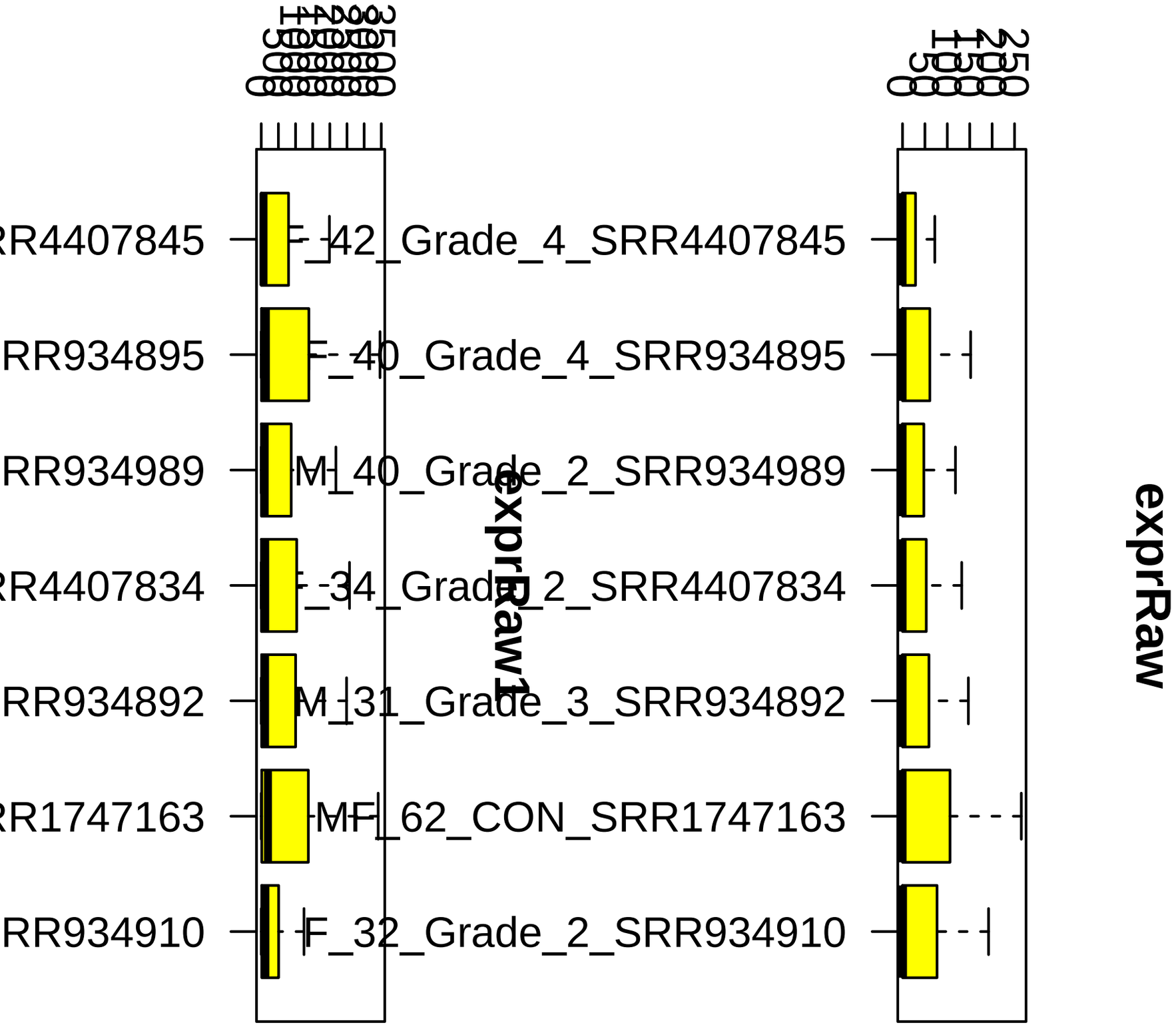
exprRaw1
exprRaw
F_42_Grade_4_SRR4407845
F_40_Grade_4_SRR934895
M_40_Grade_2_SRR934989
F_34_Grade_2_SRR4407834
M_31_Grade_3_SRR934892
MF_62_CON_SRR1747163
F_32_Grade_2_SRR934910

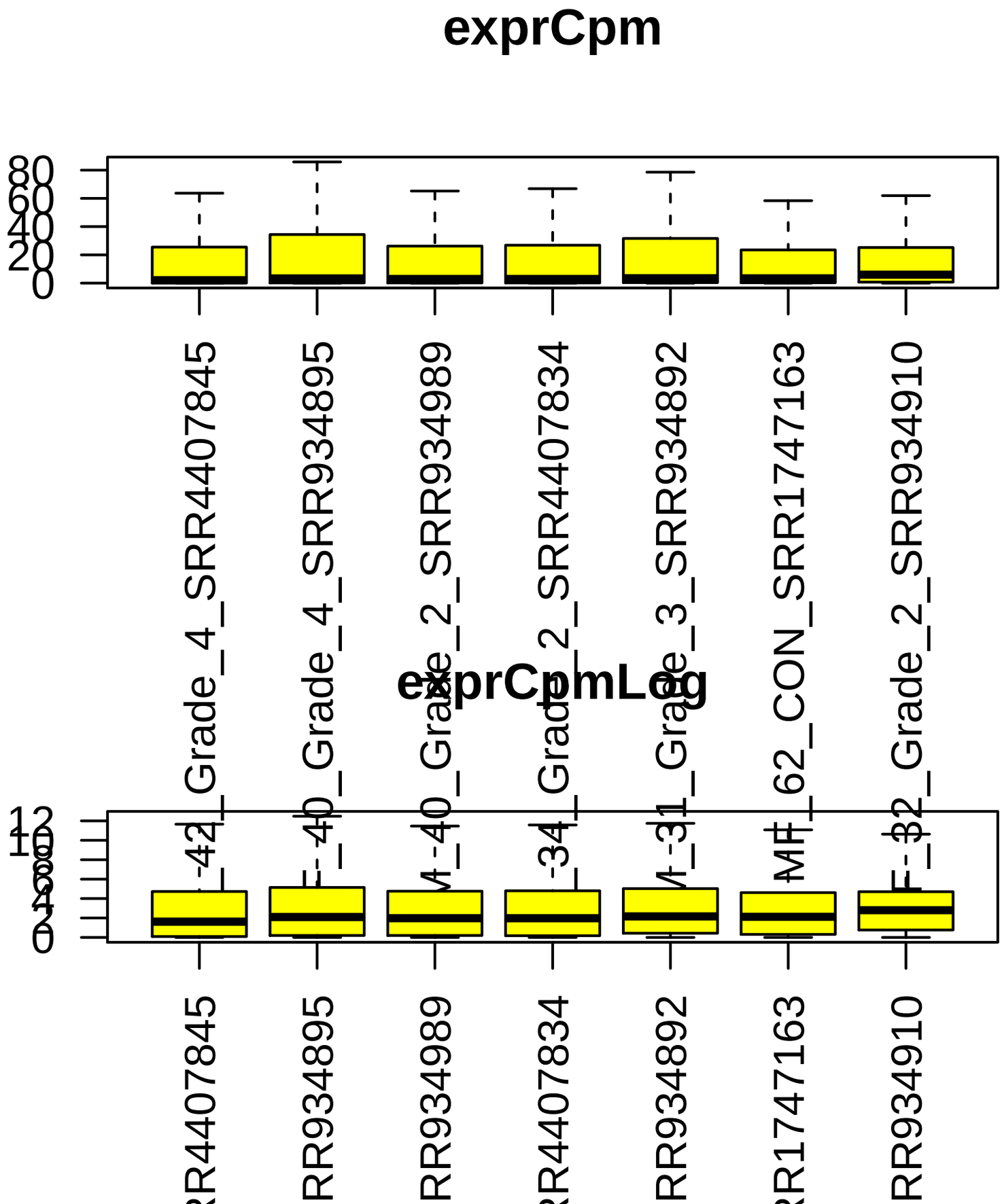
exprCpm
80
60
40
20
0
_42_Grade_4_SRR4407845
F_40_Grade_4_SRR934895
M_40_Grade_2_SRR934989
_34_Grade_2_SRR4407834
M_31_Grade_3_SRR934892
MF_62_CON_SRR1747163
F_32_Grade_2_SRR934910
exprCpmLog
12
10
8
6
4
2
0
RR4407845
RR934895
RR934989
RR4407834
RR934892
RR1747163
RR934910

exprTpm
15
10
5
0
F_42_Grade_4_SRR4407845
F_40_Grade_4_SRR9348895
M_40_Grade_2_SRR9349989
F_34_Grade_2_SRR4407834
M_31_Grade_3_SRR9348892
MF_62_CON_SRR1747163
F_32_Grade_2_SRR9349910
exprTpmLog
F_42_Grade_4_SRR4407845
F_40_Grade_4_SRR9348895
M_40_Grade_2_SRR9349989
F_34_Grade_2_SRR4407834
M_31_Grade_3_SRR9348892
MF_62_CON_SRR1747163
F_32_Grade_2_SRR9349910

exprRpkm
exprRpkmLog
F_42_Grade_4_SRR4407845
F_40_Grade_4_SRR9348895
M_40_Grade_2_SRR9349989
F_34_Grade_2_SRR4407834
M_31_Grade_3_SRR9348892
MF_62_CON_SRR1747163
F_32_Grade_2_SRR9349910