Acta Geotechnica (2024) 19:1435–1448
https://doi.org/10.1007/s11440-023-01882-9

RESEARCH PAPER

A bio-inspired helically driven self-burrowing robot

Hosain Bagheri[1] · Daniel Stockwell[1] · Benjamin Bethke[1] · Nana Kwame Okwae[1] · Daniel Aukes[2] · Junliang Tao[3] · Hamid Marvi[1]

Received: 13 September 2022 / Accepted: 24 March 2023 / Published online: 8 April 2023
© The Author(s), under exclusive licence to Springer-Verlag GmbH Germany, part of Springer Nature 2023

Abstract
Autonomous subsurface applications (e.g., construction, exploration, and environmental monitoring) have created a need for burrowing mechanisms and robots. This study presents a bio-inspired burrowing robot and explores its burrowing behavior (in terms of speed, acceleration, energetics, and cost of transport) in glass beads used as a sand analog. The robot has two main segments: an anchoring central body and a screw driving body. Two different screw designs (a one- and four-bladed screw) and three different anchoring fins (a dichotomous, tubercled, and control fin) were tested. It was observed that while the four-bladed screw provides a higher translational velocity, it came at the expense of higher motor torque and power, making the cost of transport high. It was also discovered that operating the one-bladed screw at a lower rotational speed provided a lower cost of transport both when burrowing in and out. In addition, the tubercled fin design showed promising results for decreasing vertical drag and, thus, increasing the translational velocity as the robot burrows into the granular media. The knowledge gained through this series of experiments will assist in the optimization of effective burrowing robots for geotechnical and geoenvironmental applications such as site investigation and environmental monitoring.

Keywords Burrowing · Cost of transport · Fins · Helical screw · Robot · Tubercle

1 Introduction

Subterranean robots have become important for a wide variety of subsurface applications, providing an alternative means for mankind to completing hazardous and previously unattainable tasks. This includes functions such as geotechnical site investigation, subsurface construction (e.g., cable and pipeline installation), anchor placement, environmental monitoring (e.g., substances and pollutants), exploration (e.g., minerals, oil, and water), and search-and-rescue operations (e.g., earthquake and avalanche responses). Therefore, it is evident that there is a need for efficient and effective burrowing robots that can perform the aforementioned tasks.

In nature, the mechanism of burrowing is contingent upon the characteristics of the substratum (e.g., soil particle size and shape, composition, cohesion, depth) and the intruder (e.g., size, form, and structure). Burrowing can be accomplished through excavation (i.e., digging), local and bulk fluidization, undulation, and peristaltic motion. Smaller invertebrate animals such as worms or bivalves are more inclined to use peristaltic motion and local fluidization, while larger vertebrate animals such as sandfish lizards or moles depend on excavation, bulk fluidization, and undulation [7, 36]. Plant roots, through the process of cell elongation, grow through the medium, penetrating it and compacting the surrounding area. This growth enables the roots to transport nutrients and provide anchoring for the plant [24, 34].

Plants and animals and their burrowing mechanisms have become a source of inspiration for creating subterranean robots. To date, many bio-inspired burrowing robots have been developed that take their inspiration from plant roots [24, 33, 34], worms [4, 5, 13, 31, 41, 44], bivalves

✉ Hamid Marvi
hmarvi@asu.edu

1 School for Engineering of Matter, Transport and Energy, Arizona State University, Tempe, AZ, USA

2 The Polytechnic School, Arizona State University, Mesa, AZ, USA

3 School of Sustainable Engineering and the Built Environment, Arizona State University, Tempe, AZ, USA

and razor clams [10, 12, 14, 15, 36], sandfish lizards [21, 22], moles [17–19], and fish [20]. Other robots have been developed that utilize a hammer [42] or a screw-driven mechanism [1, 6, 27, 28, 43] for burrowing. While these designs may have not directly been inspired by nature, they have proven to be just as effective.

The design of the burrowing robot developed in our laboratory [29] was motivated by the screw mechanism, taking inspiration from the seeds of the redstem filaree (*Erodium cicutarium*). This seed consists of a long helical tail or awn, which unwinds and becomes erect in the presence of moisture or winds up helically in the absence of moisture. It has been observed that cycles of winding and unwinding allow the seed to penetrate the soil [9]. Jung *et al.* [16] showed that a dry, helically wound filaree seed experienced 75% less resistance/drag when twisted into the medium as opposed to when it was vertically displaced; they examined this by attaching a seed to a load cell and displacing it down at a constant velocity into a rotating container filled with glass beads. In addition, the rotating motion of a helical awn in soil results in net thrust, which is fundamentally induced by both a breakage of symmetry due to the asymmetric helical shape as well as anisotropic frictional shear forces on the surface of the helices [37, 40]. This phenomenon has also been studied in geotechnical engineering—not for burrowing or propulsion, but for the design and installation of screw piles/anchors [27].

In the present study, designs of one- and four-bladed screws were developed. Both designs have a cylindrically coned base with blade and pitch dimensions that are formulated based on those found in the literature [27, 32]. The two screw designs will show how these dimensions will influence the effectiveness and efficiency of burrowing. To assist with stability during burrowing (in terms of rotational anchorage and vertical steering), a total of four tubercle-inspired fins (i.e., fins that are circumferentially spaced from the central axis) were fixed at the top of a screw body. Three fin designs that share the same effective surface contact area and mass were tested: a control fin (C-fin), a dichotomous fin (Y-fin), and a tubercled fin (T-fin). The control fin is a flat surface; the dichotomous fin is a flat surface with two branches that was inspired by the dichotomous root branching of plants; and a tubercled fin that is a flat surface having top and bottom leading edges that consist of bumps inspired by the tubercles on the fins of humpback whales. The objective of the Y-fin design is to increase the rotational drag force and, thus, improve the top anchoring of the robot. While studies have been conducted on the anchorage effect of plant roots, they have mainly focused on vertical pullout [8, 25]. Examining the effect of a tubercle-inspired fin can help to determine if the features of such a fin would decrease vertical drag in granular media as well as increase the transitional body velocity of a burrowing device, as it has been observed that the tubercles on the leading edges of humpback whale fins can decrease drag and increase lift [2, 3, 26].

2 Methods

2.1 Robotic design

The helically driven self-burrowing robot (shown in Fig. 1) has two main parts: an anchoring central body and a driving screw body.

The anchoring body houses an 84 rpm (no-load speed) planetary gear motor with an encoder, where the motor shaft is coupled to the driving screw through a motor hub. To decrease friction between the two bodies, a single row of radial ball bearings is used to couple the anchoring body and the inner housing of the screw body. The screw-motor-bearing design took inspiration from [38, 39], whose craft was tested with Eglin silica sand (Quikrete #1962 Medium sand, 0.3–0.8 mm particle diameter) and crushed Black Point basalt lunar simulant (60% of particle sizes finer than 0.11 mm). The selected bearing (6209-2RS Ball Bearing) is rubber sealed, thus decreasing the probability of fine particles jamming and inhibiting the bearing performance. However, with longer duration of use and harsher environmental exposures, the wear and tear of the seal can be compromised. The anchoring body has four T-shaped slots placed circumferentially from the central axis of the robot that allows fins of different designs to be installed on the robot. While there is sufficient space to house controllers above the planetary gear motor, for ease of use, the controller unit (consisting of an Arduino UNO, a motor controller, and a current sensor) is located outside of the robot at the end of a tether. To enable constant voltage to be supplied, the robot was tethered to an external power supply.

A one-bladed screw with a pitch of 37 mm (shown in Fig. 2a) and a four-bladed screw with a pitch of 105 mm (shown in Fig. 2b); both screws have an outer diameter of 129 mm and height of 137 mm. Three fin designs (shown in Fig. 2c–e) were developed and tested: a control fin (C-fin), a dichotomous fin (Y-fin), and a tubercled fin (T-fin). All parts were printed using a Markforged Onyx Pro 3D printer with an Onyx micro carbon fiber-filled nylon filament; the fill ratios were adjusted to ensure that all screw and fin designs would be equal in mass. When installed, each fin sticks out 93 mm from the side of the anchoring body. The fully assembled robot has an outer diameter of 270 mm, a height of 201 mm, and a total mass of 1.28 kg. When comparing the robot's dimensions to that of traditional subterranean devices and structures, such as tunnel boring machines (2–17.6 m diameter, 10–100 m length) [45], piles

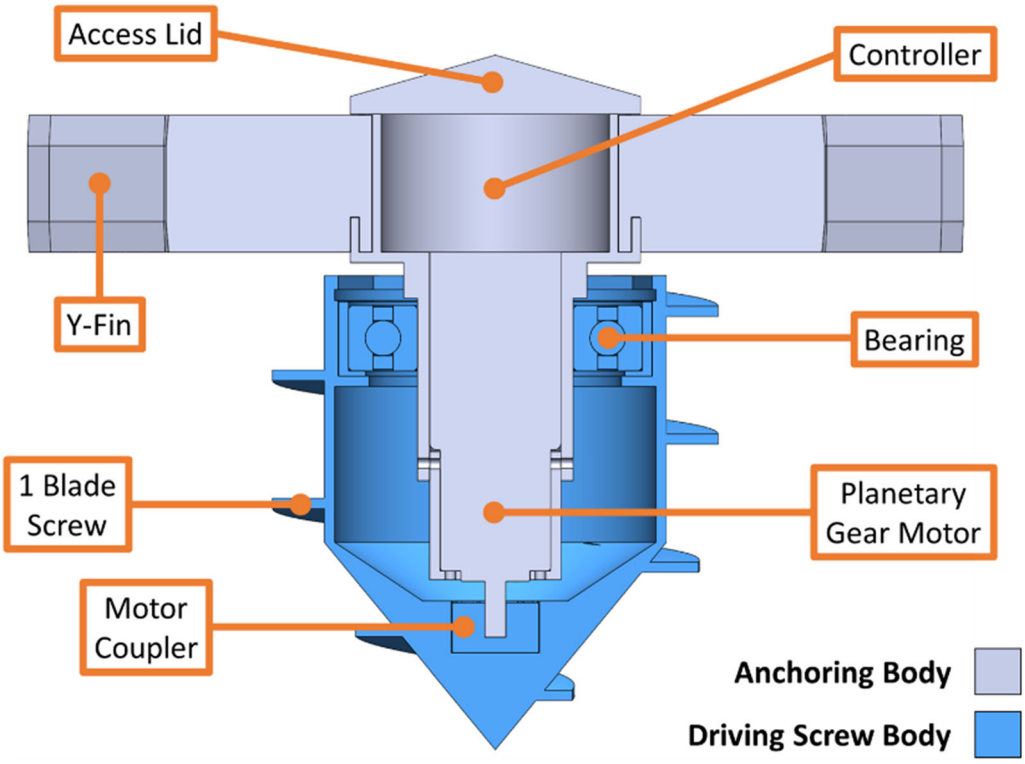

Fig. 1 Sectional view of the self-burrowing robot

(0.3–0.6 m diameter, 6–32 m length) [46], and cone penetrometers (0.016–0.02 m diameter, 0.038–1.6 m length) [11, 23], it falls on the lower size spectrum.

2.2 Burrowing test setup and scenarios

A 121-L heavy-duty plastic cylindrical container with a diameter of 55.7 cm and height of 70.5 cm was filled to 75% capacity with soda–lime–silica glass beads ranging from 1.8 to 2.2 mm in size (Fig. 3a). The glass beads were pluviated into the container from a height of 15 cm above the top edge of the container. We followed the ASTM standards D4253-16e1 and D4254-00 to determine the minimum void ratio (0.515) and maximum void ratio (0.580) of the glass beads. The sample used for burrowing tests has a dry unit weight of 15.8 kN/m^3. Based on the specific gravity of 2.5, the void ratio of the sample is calculated to be 0.550, resulting in a relative density of 46.2%. An 80/20 T-slot framing structure was attached to the top of the container to support the mounting of two infrared (IR) OptiTrack motion capture cameras (with a horizontal field of view of 56° and a frame rate of 120 frames/sec) to track the robot in three dimensions. All experiments were conducted using the same camera calibration procedure and reference coordinate system.

Upward/outward and downward/inward burrowing (achieved by counterclockwise and clockwise actuation, respectively) were conducted at six motor rotational speeds ranging from 20 to 60 rpm (in increments of 10 rpm) for all combinations of screws and fins. To record the 3D trajectory of the robot, a glass rod with a spherical IR maker at its tip was mounted to the robot (Fig. 3). Due to the helical screw design, the IR marker has a spiral in/out trajectory about a central axis. Three successful trials (a trial was successful if the trajectory of the robot's path spiraled around a vertical or linear central axis) were performed for each screw/fin combination. A trial was considered unsuccessful if the trajectory of the robot's path spiraled around a curved axis instead of a vertical axis. For the downward burrowing trials, the robot would travel down through the glass beads until the motor reached its stall torque, at which point the robot would stop. With the IR marker being rigidly attached to the robot, the tip of the screw in respect to the IR marker was known. For experiments, the robot was initially fully submerged into the medium until the fins were covered. The motor was then commanded to rotate clockwise to burrow down/in, with the starting point (0 mm) of travel being classified as the tip of the screw. The robot would travel one body length (201 mm) or until the motor reached its stall torque, at which the robot would stop. The motor was then commanded to rotate counterclockwise to burrow up/out, approximately traveling one body length, with the starting point of the travel being classified as the tip of the screw

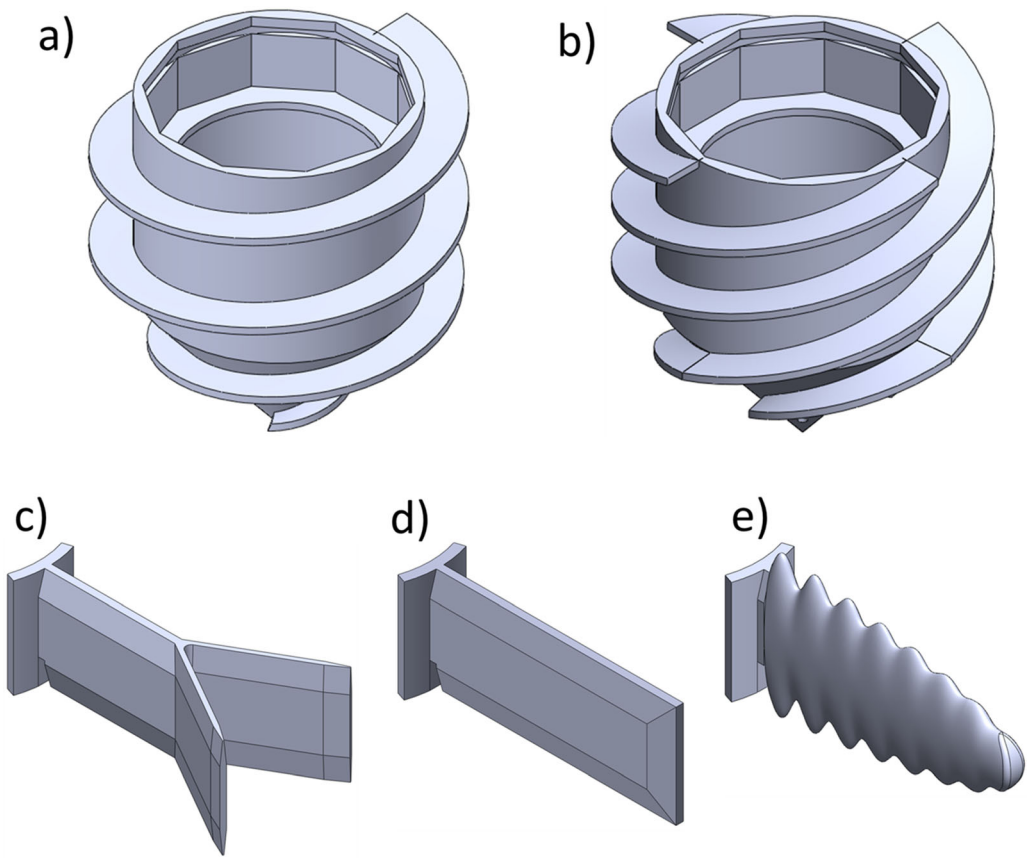

Fig. 2 Isometric views of screw and fin designs: **a** one-bladed screw with a 37 mm pitch, **b** four-bladed screw with a 105 mm pitch, **c** dichotomous fin (Y-fin), **d** control fin (C-fin), and **e** tubercled fin (T-fin)

(Fig. 4). Per given experimental conditions (i.e., motor speed, fin and screw type), insufficient traction was observed near the top surface of glass bead and higher resistive force at greater depths. Therefore, the robot was incapable of stably traveling one body length when burrowing in and out, hence the lack of data for the whole travel length (0–200 mm) as expressed in Figs. 6, 7, 8, 9. A proportional–integral–derivative (PID) controller was used to maintain the desired rotational speed for the robot, and encoder readouts were recorded to determine the regions along the traveled path where the rotational speed did not fluctuate about the desired rpm. High fluctuations occurred at the beginning and end of the traveled path, at points where the robot encountered the lowest and highest granular resistance, respectively. The regions where the rotational speed was not stable were excluded from each trial. As the test employed a motor with a stall current of 20 A, a high-capacity power supply was used. All experiments were conducted at 14 V. The current readings from the power supply were recorded for use in the power and efficiency calculations.

3 Results and discussion

The velocity, acceleration, power, and cost of transport (COT) for burrowing in and burrowing out of the granular media were examined for all given screw/fin/rotational speed combinations. Per each trial, moving average was applied for the velocity profile. Then, a linear fit was applied to the velocity profile, of which the slope of this linear fit was used to calculate the average acceleration/deceleration.

3.1 Burrowing velocity

When evaluating the velocity profiles of downward burrowing trials (Figure 5), the following general observations can be made: (1) the four-bladed screw accomplished a faster velocity than the one-bladed screw; (2) the robot had faster body velocities when a T-fin and a C-fin were incorporated;

(3) at rotational speeds from 30 to 60 rpm, the four-bladed screw with a T-fin showed the highest body velocity; (4) the body velocity decreased as the depth increased, (5) tests using lower rotational speeds resulted in

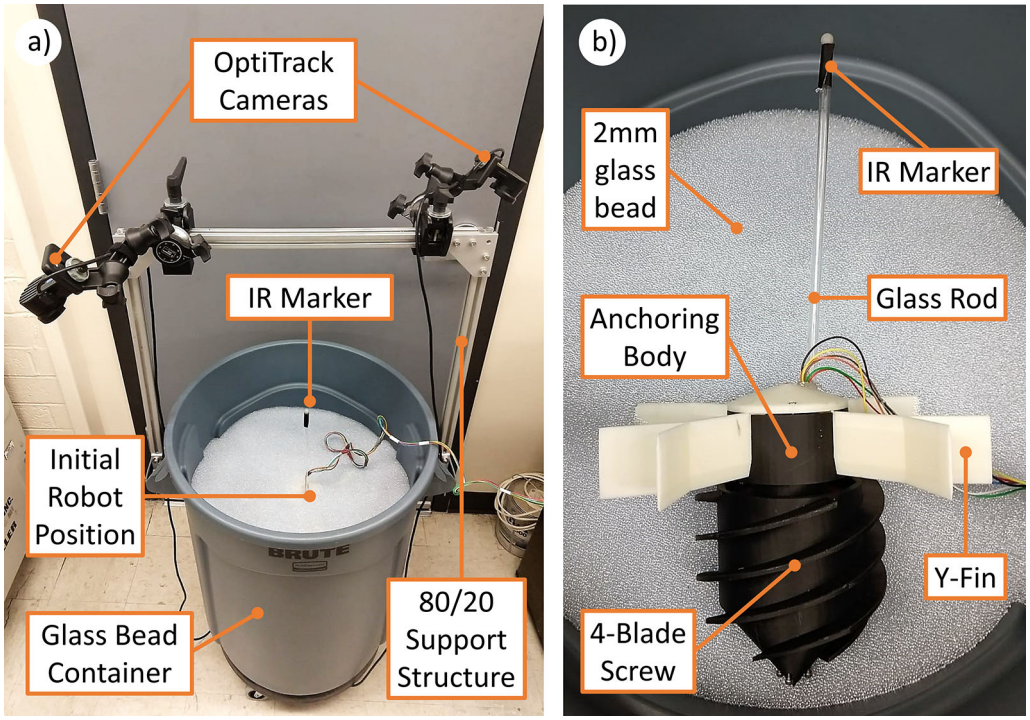

Fig. 3 **a** Experimental setup consisting of a 121-L plastic container filled to 75% capacity with 2 mm glass beads and the 80/20 support structure with two OptiTrack cameras mounted on it. **b** Self-burrowing robot with a four-bladed screw and a dichotomous fin (Y-fin); an IR marker mounted to a glass rod is attached to the robot to assist in positional tracking

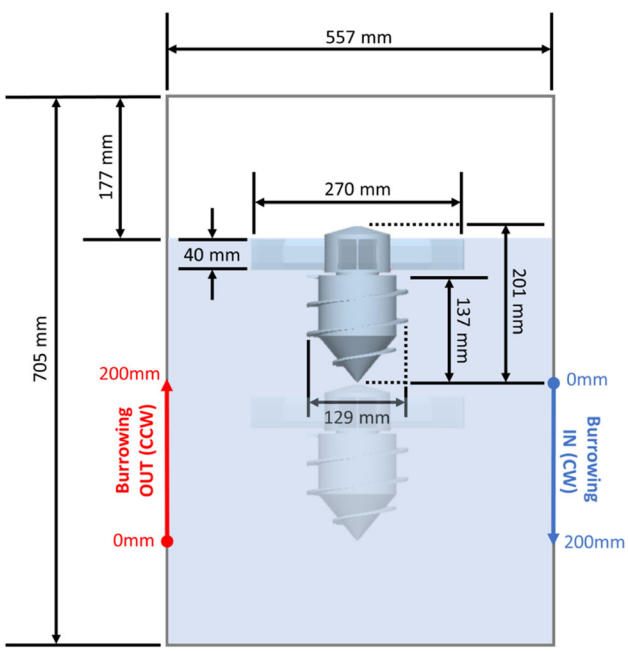

Fig. 4 Sectional view of the experimental setup with submerged robot, listing main dimensions. Classification of burrowing in and out along with their relative start (0 mm) and stop (200 mm) points

lower velocity fluctuations than tests conducted at higher speeds; and (6) at a rotational speed of 20 rpm, the robot traveled the least depth.

The four-bladed screw achieved a faster translational velocity than the one-bladed screw, for it was able to displace more of the medium at the same rotational speed. Similar results were observed in a study performed by Omori et al. [30], where a two-bladed screw was shown to excavate the soil faster than a one-bladed screw. Regardless of the number of blades, a helical winding has been observed to decrease drag for vertical body translation in granular media [16].

While the fins assist in anchorage, they also introduce additional drag. Ideally, we would like to increase rotational drag and decrease vertical drag. As the T-fin design was associated with the highest velocity profile with respect to depth, it can be assumed that the tubercled patterns on the leading edges of the fin may assist in decreasing drag (in a 2 mm granular media) as compared to the control fin. While similar results have been observed for tubercles in fluid dynamics [2, 3, 35], structures with tuburcled edges have never been tested in dry granular media. The Y-fin did not perform as well; this could result from the additional surface area of the Y-fin as compared to the other fin designs. Throughout the experiments, it was observed that trials using the Y-fin were more prone to have curved trajectories as opposed to those for the C-fin and the T-fin. This could have been caused by the angled surface ends of the Y-fin, creating additional steering

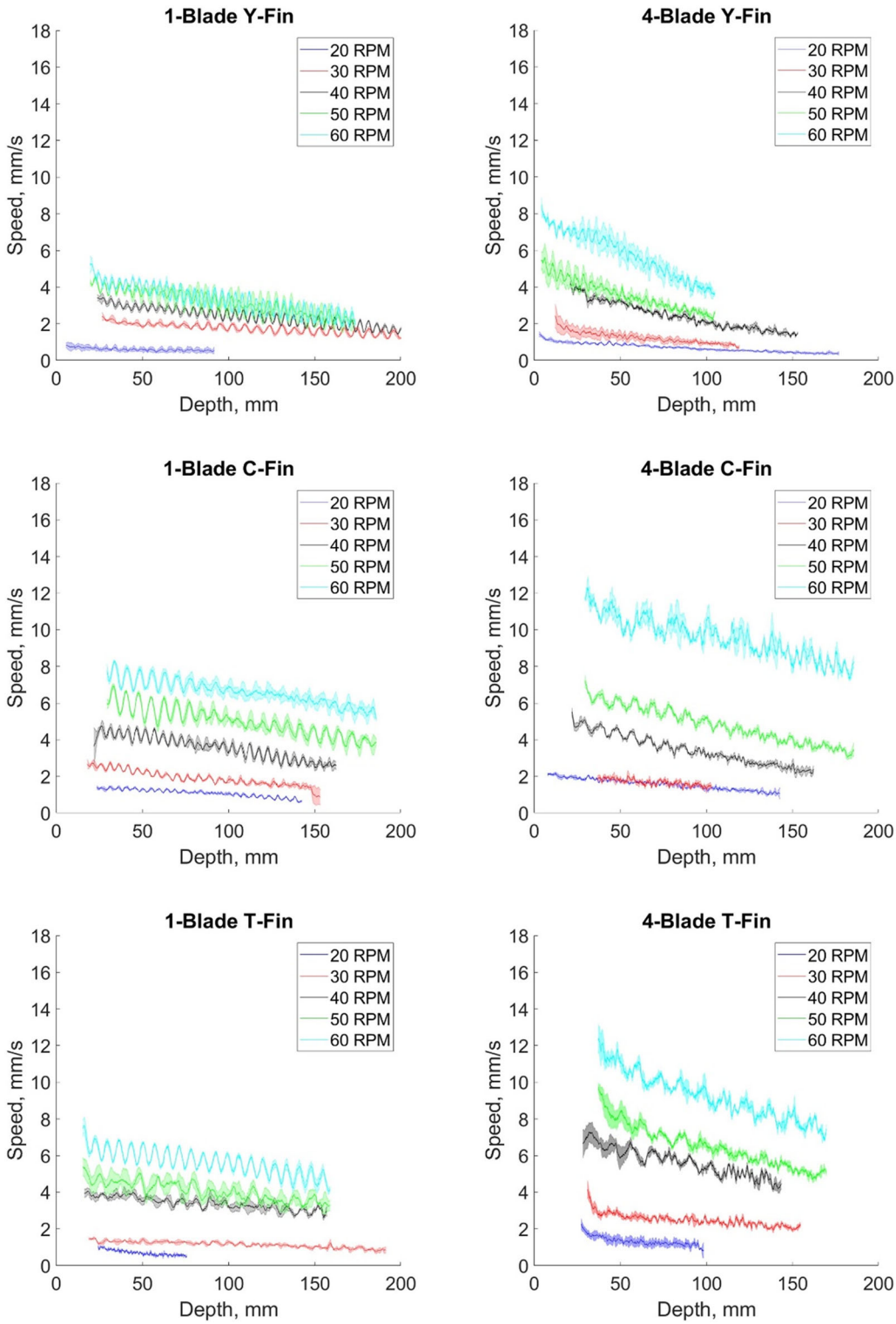

Fig. 5 Downward burrowing velocity profile with respect to depth for all combinations of screw and fin designs. The solid line indicates the average of three trials, and the shaded region illustrates the standard error

angles when the robot deviates from its central axis of travel.

The influence of the leading-edge geometry as the structure moves through granular media has previously been explored. For example, the effect of different wedge

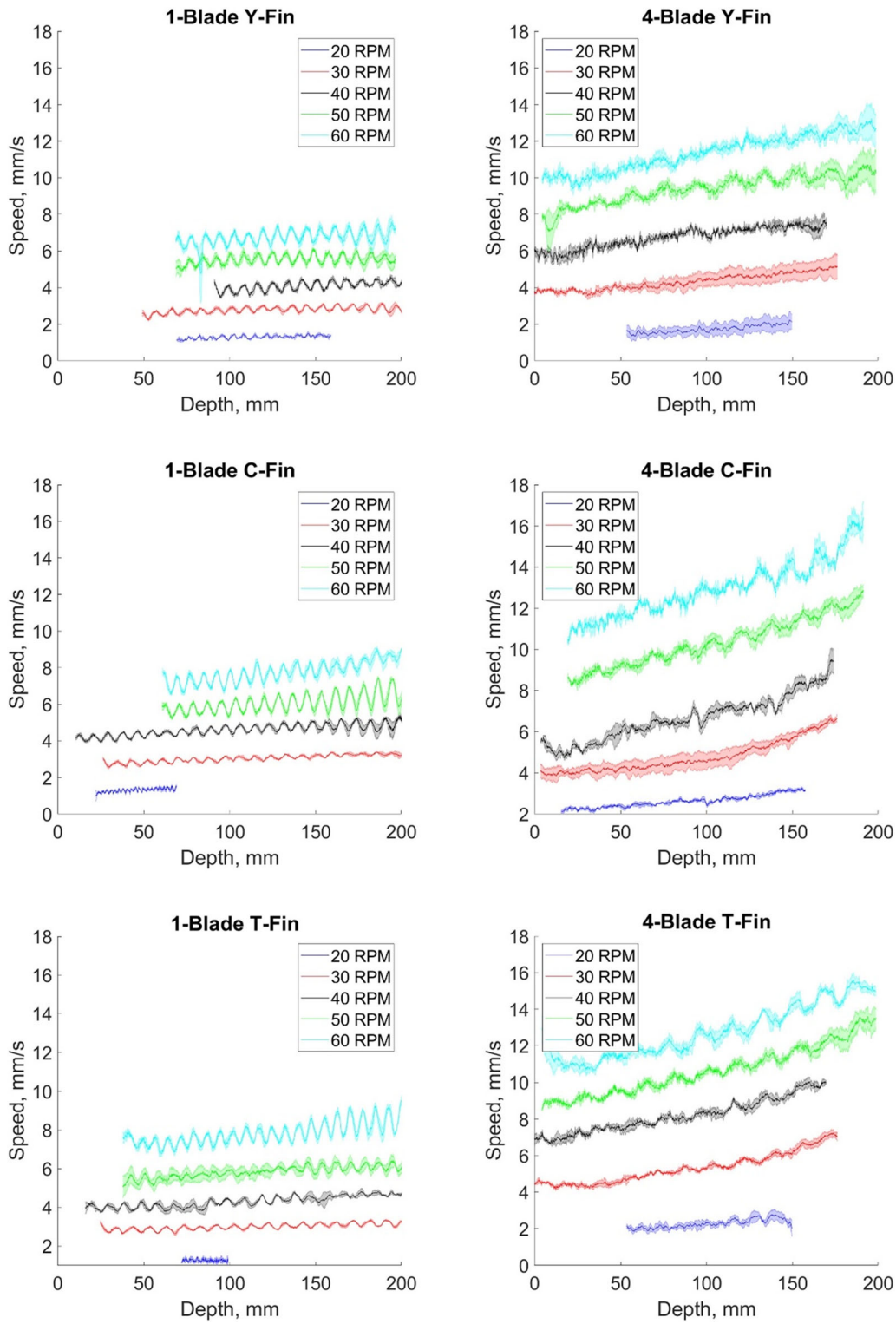

Fig. 6 Upward burrowing velocity profile with respect to depth for all combinations of screw and fin designs. The solid line is the average of three trials, and the shaded region illustrates the standard error

angles has been investigated for horizontal translation in granular media, where a sandfish-inspired robot was observed to burrow out or in depending on the head angle of attack. Interestingly, a robot with a symmetrical wedged head was observed to burrow out, indicating that the laws of fluid mechanics cannot be translated to granular media.

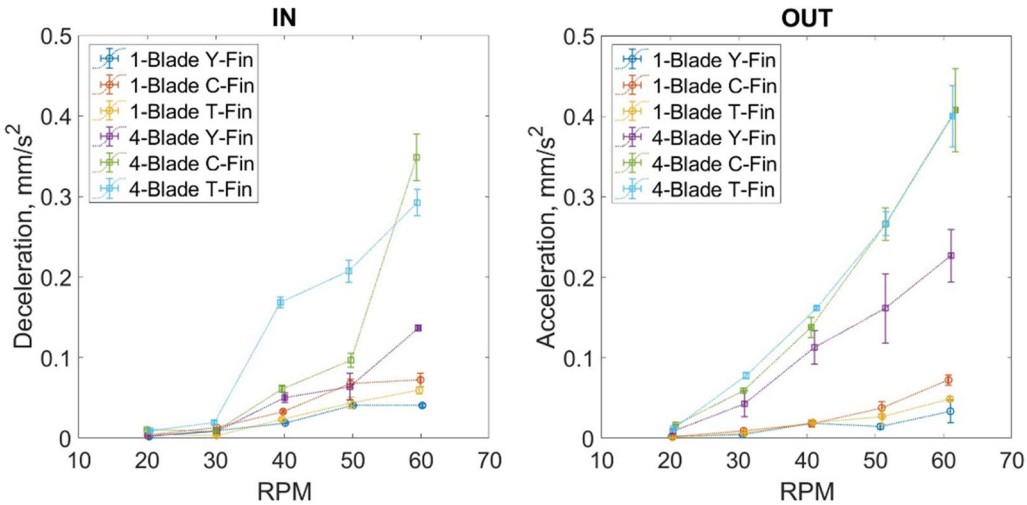

Fig. 7 Deceleration/acceleration with respect to motor speed for burrowing in/burrowing out for all combinations of screw and fin designs

Yield stress increases with depth in granular media, but not in fluid media [22].

Lastly, it was observed that as the rotational speed of the screw was increased, the translational speed of the robot body also increased. The faster the helical screw can turn, the faster it is able to displace the medium. However, for all trials and conditions, it was observed that the velocity decreased as the depth increased. In fact, the resistance from the medium was found to increase with the increase in depth; thus, more motor torque was required to displace the same volume of the medium. While a higher rotational speed provides a faster body velocity, the PID controller has more difficulty in maintaining higher rotational speeds. Nonetheless, for the lowest rotational speed (20 rpm), the robot was observed to travel the least depth; the robot did not have sufficient momentum to overcome the initial resistance of the medium.

When evaluating the velocity for burrowing out versus depth (Fig. 6), similar observations to that for burrowing in can be made, with the following exceptions: (1) the four-bladed screw with T-fin had a slightly higher body velocity than all other combinations; (2) the body velocity increased as the robot burrowed out; and (3) the velocity profiles for the one-bladed screw had a slope (acceleration) closer to zero, while those of four-bladed screw had a more positive slope. As the robot burrows out, the granular resistance decreases and, thus, the body velocity increased. When burrowing in, the medium is fluidized and is displaced upwards by the screw. Therefore, the load applied by the excavated medium on the robot increases as it travels further down. In contrast, for burrowing out, the screw pulls down the medium above it and pushes it down, decreasing the applied load from above as the robot travels upward. In addition, with a four-bladed screw, the granular medium can be displaced at a faster rate and, thus, can provide a higher acceleration than that for the one-bladed screw.

3.2 Burrowing acceleration/deceleration

To distinguish the difference between the conditions more clearly, the average acceleration/deceleration for each condition was calculated, and the results are plotted in Fig. 7. The following general observations can be drawn from the burrowing in experiments: the deceleration increases as the motor speed increases (MANOVA, $F_{4,164} = 20.003$, $P \leq 0.00001$), the four-bladed screw has a higher deceleration than the one-bladed screw (MANOVA, $F_{1,164} = 31.164$, $P \leq 0.00001$), the C-fin and the T-fin have higher decelerations than the Y-fin (MANOVA, $F_{1,164} = 4.769$, $P = 0.010$), and the four-bladed screw with the T-fin has the highest deceleration (MANOVA, $P \leq 0.00001$) for nearly all conditions (MANOVA, $P = 0.058$). Similar trends can be observed for the acceleration when burrowing out, with the following exceptions: (1) the results for the four-bladed screw with a C-fin and a T-fin are not that different (MANOVA, $P = 1$), and (2) greater acceleration than deceleration was observed for the four-bladed screw when burrowing out versus when burrowing in (MANOVA, $F_{1,164} = 21.531$, $P \leq 0.00001$), while not much of a difference was noted for the one-bladed screw (MANOVA, $F_{1,164} = 0.403$, $P = 0.526$) . From these observations, it can be concluded that the four-bladed screw is the better performing screw for traveling faster through the medium. The fin design that would

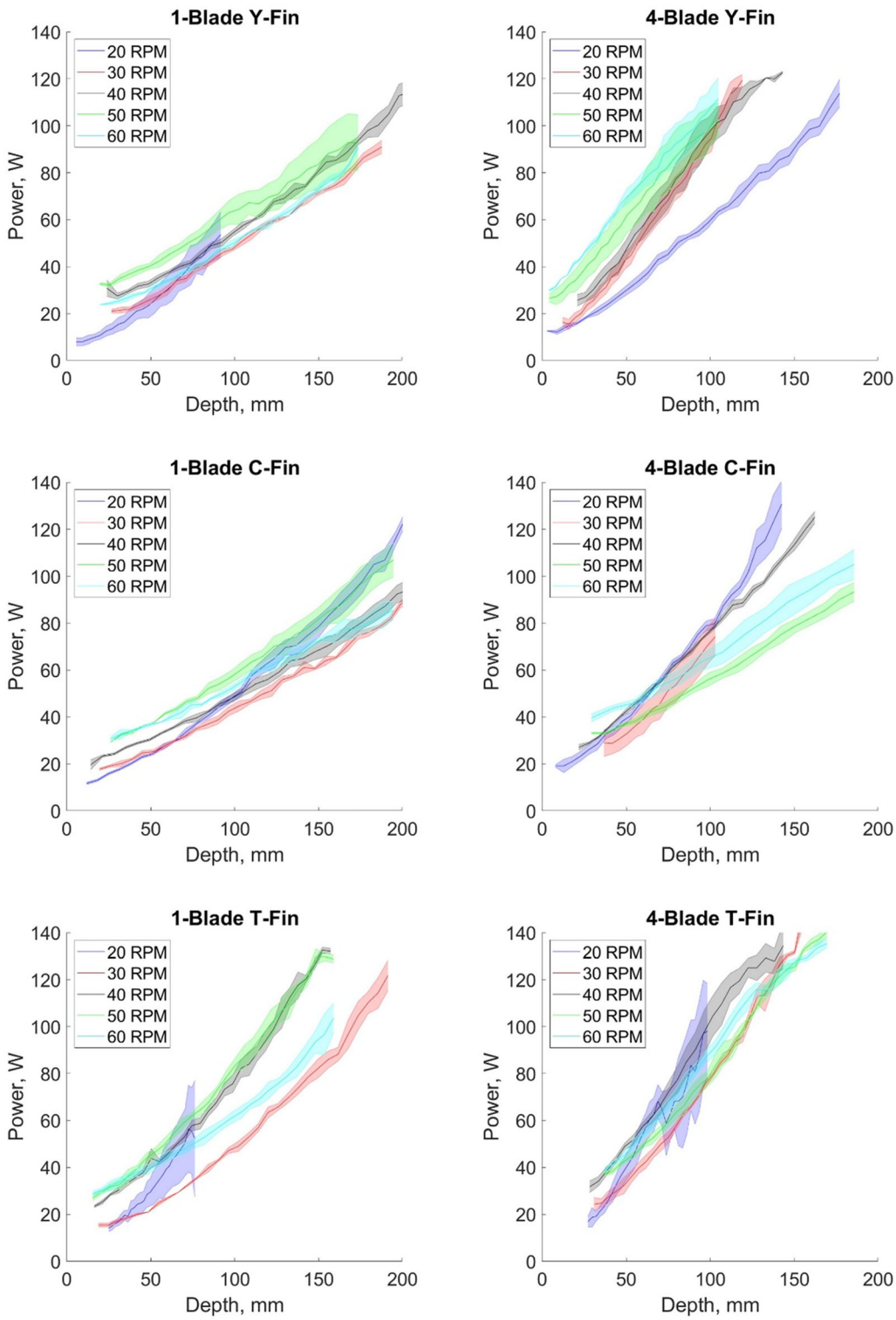

Fig. 8 Burrowing in consumed power profile with respect to depth for all combinations of screw and fin designs. The solid line is the average of three trials, and the shaded region illustrates the standard error

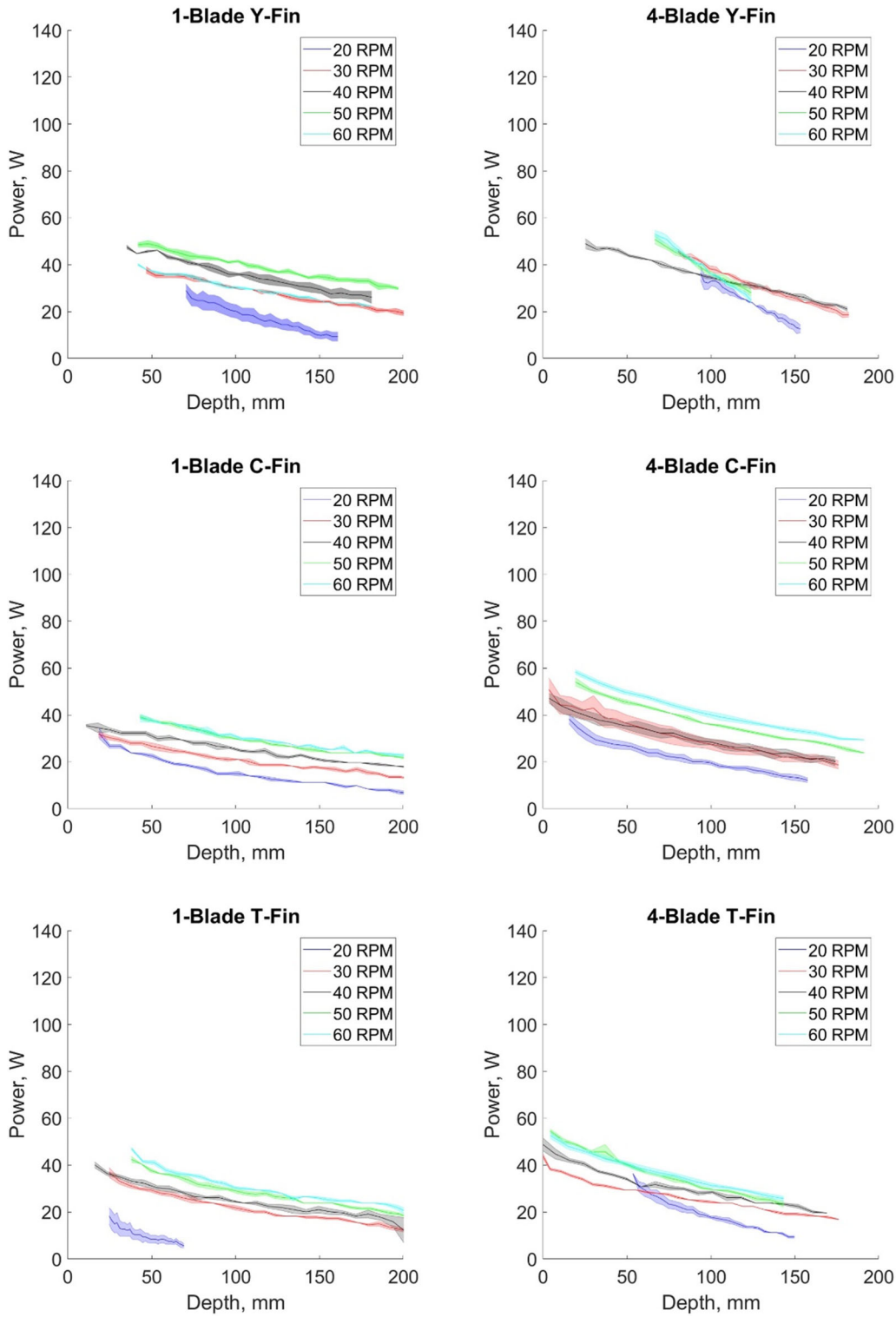

Fig. 9 Burrowing out consumed power profile with respect to depth for all combinations of screw and fin designs. The solid line is the average of three trials, and the shaded region illustrates the standard error

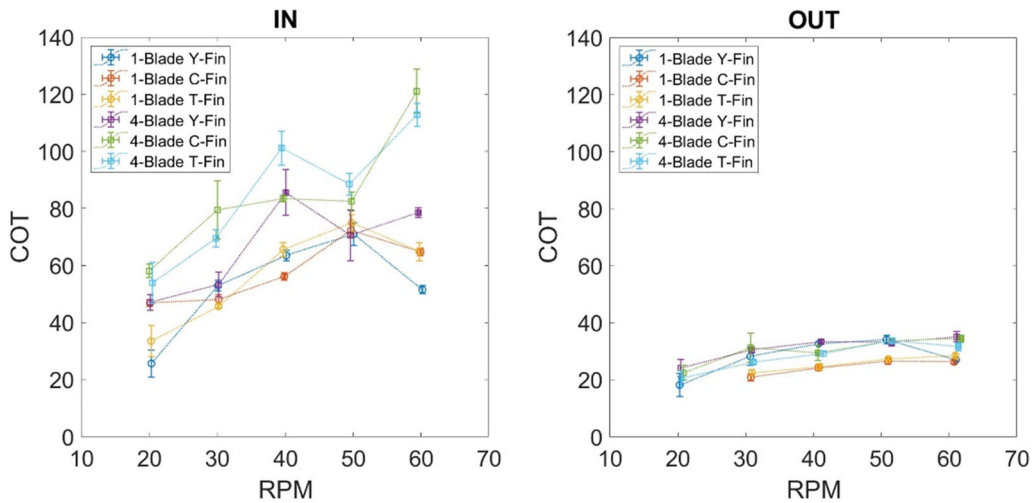

Fig. 10 COT with respect to motor speed for burrowing in and burrowing out for all combinations of screw and fin designs

provide the best anchorage and the least amount of drag are the C-fin and the T-fin.

3.3 Burrowing energetics

The analysis cannot be completed without looking at the energetics of the robot. With supply voltage held constant at 14 V, the power supply's current with respect to time was recorded and synchronized with the traveling depth for each trial. Using the collected information, the power drawn by the robot can be represented with respect to the depth of travel for burrowing, as shown in Figs. 7 and 9.

When reviewing the plots for power versus depth for burrowing in, the following observations were made: (1) the power use increases as the depth increases, (2) the four-bladed screw consumes more power than the one-bladed screw, (3) the power consumption of the four-bladed screw increases faster than the one-bladed screw as the depth increases, and higher motor speeds use more energy than lower motor speeds. For burrowing out, the following observations can be made: less power is required to burrow out than to burrow in, (2) the robot draws less power as it travels back to the surface, (3) the rate of change for power consumed with respect to depth is about the same for all burrowing out conditions, and (4) the rate of change for power consumed with respect to depth is greater for burrowing in than for burrowing out.

As the robot travels down, the granular yield stress increases. To preserve the desired rotational speed, the motor needs to draw more current and, thus, the intake power increases. At higher rotational speeds, the power consumption will also be greater. While the four-bladed screw provides a faster translational velocity, this velocity is achieved by creating more torque, which requires more power. Therefore, as depth increases, the four-bladed screw draws more power than the one-bladed screw. However, for burrowing out, neither the screw design nor the fin design impacts the power consumption significantly. This indicates that the granular yield stress decreases at a faster rate for burrowing out; to a certain extent, the drag forces created by different robot geometries and surface areas do not have as much of an impact on the power intake. In other words, the medium becomes more fluid-like and less compact during the burrowing up process, while the opposite trend was observed for burrowing down.

3.4 Burrowing efficiency

To obtain a clear understanding of which design parameters and experimental conditions are optimal for burrowing in and burrowing out, it is best to evaluate the cost of transport (COT) for each condition. The cost of transport is defined as the energy used (i.e., the time integral of power) divided by the work done (i.e., the weight of the robot multiplied by the distance traveled). To compare the COT between different conditions, all conditions need to be evaluated using the same absolute depth of travel (i.e., the same starting and ending depth). Since burrowing in and burrowing out shared slightly different depths of travel, a common depth region was used for burrowing in and another for burrowing out. In addition, COT was not calculated for burrowing out for a one-bladed screw with a T-fin or a C-fin at 20 rpm, since the distance of travel was too short and/or had little overlap with the other conditions. Therefore, to avoid limiting the COT calculations for burrowing out to a very short distance of travel, trials with a one-bladed screw with those two fins were dropped. When evaluating the COT versus rpm trends (Fig. 10) for burrowing in, the following observations can be made: (1) the one-bladed screw has a lower COT than the four-bladed

screw (MANOVA, $F_{1,164} = 171.171$, $P \leq 0.00001$), (2) the lowest COT was at 20 rpm for the one-bladed screw with a Y-fin (MANOVA, $P \leq 0.0002$), and (3) the highest COT was at 60 rpm for the four-bladed screw with a C- fin or a T-fin (MANOVA, $P \leq 0.00001$). For burrowing out, the following was observed: (1) burrowing out has a lower COT than burrowing in (MANOVA, $F_{1,164} = 1027.207$, $P \leq 0.00001$), (2) the lowest COT was found at 20 rpm for the one-bladed screw with a Y-fin, and (3) the highest COT was found at 60 rpm for a four-bladed screw with a Y-fin. This shows that moving faster will not always be more efficient, especially when moving in granular media. What was thought to be the least optimal design (i.e., a one-bladed screw with a Y-fin) showed to have the lowest COT. In contrast, what was deemed to be the most optimal design (i.e., the four-bladed screw with a C- fin or a T-fin) showed the highest COT for burrowing in and burrowing out. In addition, it was shown that burrowing at lower speeds was more efficient than burrowing at higher speeds. Lastly, burrowing out has a lower COT than burrowing in.

3.5 Limitations and outlook

In this study, we limited our scope to the design of the robot, experimental observations, and analysis of the results. Much more can be done to reveal the governing mechanism of vertical burrowing through the modeling and analysis of the forces and deformation involved in the burrowing process. For example, it would be insightful to partition the soil–robot interaction forces into thrust and resistance, monitoring the change in force with change in the robot's configuration and actuation conditions (e.g., rotational speed, direction). This can be accomplished, for example, through discrete element method (DEM) simulations or coupled multibody dynamics (MBD) DEM simulations [40]. Such simulations would allow us to determine the effectiveness of various design parameters, such as the anchoring mechanism (i.e., the fin design) and the driving of the screw. In addition, we plan to further improve the design to suit real-life conditions and evaluate the burrowing performance of the robot in natural granular soil and clayey soil. Ultimately, we aim to develop effective self-burrowing robots for a wide range of subsurface applications that are hazardous and unattainable to humans, both within and beyond the geotechnical field.

4 Conclusion

In conclusion, much was discovered through the series of experiments conducted with the self- burrowing robot:

- 4-bladed screw provided a higher translational velocity and deceleration/acceleration, compared to the 1-bladed screw during burrowing in/out.
- C- and T-fin were associated with higher translational velocity and acceleration.
- 1-bladed screw with a Y-fin provided the lowest COT at 20 rpm for burrowing in and out.
- If efficiency is desired (especially for burrowing in, which requires more power), the 1-bladed screw with Y-fin would be more suitable.
- If a higher velocity and acceleration are desired, a 4-bladed screw with a C- or T-fin are more beneficial.
- The geometry and surface contact area of the Y-fin could assist with decreasing rotation of the anchoring body, as compared to the other two fin designs.
- The angled surface ends of the Y-fin could potentially cause additional body steering angles (i.e., changing the vertical trajectory of robot to that of an angled one) at faster translational velocities of the robot body.
- Burrowing in was much slower and less efficient than burrowing out.
- Burrowing at a lower rotational speed was shown to be more efficient.

Acknowledgements This material is based upon work supported by the National Science Foundation (NSF) under NSF CMMI 1841574. Any opinions, findings, and conclusions or recommendations expressed in this material are those of the authors and do not necessarily reflect those of the NSF. We thank Md Ragib Shabarear for his help in characterizing the glass beads sample. We also would like to thank the anonymous reviewers whose constructive comments helped us improve the overall quality of the paper.

Data availability The datasets generated during and/or analyzed during the current study are available from the corresponding author on reasonable request.

References

1. Becker F, Börner S, Lichtenheldt R, Zimmermann K (2016) Enabling autonomous locomotion into sand - A mobile and modular drilling robot. In: 47th International symposium on robotics, ISR 2016
2. MichaelD B, Kelso RM, Arjomandi M (2016) Tubercles and their applications. J Aerosp Eng 29:04015013. https://doi.org/10.1061/(asce)as.1943-5525.0000491
3. Butt FR, Akhtar I, Talha T, Bangash Z (2020) Numerical Anslysis of Cropped Delta Wing with Reflex Camber Cross-Section at Transonic Speed with Leading-Edge Tubercles. In: Proceedings of 2020 17th international bhurban conference on applied sciences and technology, IBCAST 2020
4. Calderón AA, Ugalde JC, Chang L et al (2019) An earthworm-inspired soft robot with perceptive artificial skin. Bioinspir Biomim 14:056012. https://doi.org/10.1088/1748-3190/ab1440
5. Calderon AA, Ugalde JC, Zagal JC, Perez-Arancibia NO (2016) Design, fabrication and control of a multi-material-multi-actuator soft robot inspired by burrowing worms. In: 2016 IEEE International conference on robotics and biomimetics, ROBIO 2016

6. Darukhanavala C, Lycas A, Mittal A, Suresh A (2013) Design of a bimodal self-burying robot. In: Proceedings - IEEE International conference on robotics and automation
7. Dorgan KM (2015) The biomechanics of burrowing and boring. J Exp Biol 218:176–183
8. Dyson AS, Rogno PG (2014) Pull-out capacity of tree root inspired anchors in shallow granular soils. Geotech Lett 4:301–305. https://doi.org/10.1680/geolett.14.00061
9. Evangelista D, Hotton S, Dumais J (2011) The mechanics of explosive dispersal and self-burial in the seeds of the filaree, Erodium cicutarium (Geraniaceae). J Exp Biol 214:521–529. https://doi.org/10.1242/jeb.050567
10. Germann DP, Carbajal JP (2013) Burrowing behaviour of robotic bivalves with synthetic morphologies. Bioinspir Biomim 8:046009. https://doi.org/10.1088/1748-3182/8/4/046009
11. Hamid AM (2015) The Dynamic Cone Penetration Test: a review of its correlations and applications. In: International conference on advances in civil and environmental engineering
12. Huang S, Tang Y, Bagheri H et al (2020) Effects of friction anisotropy on upward burrowing behavior of soft robots in granular materials. Adv Intell Syst 2:1900183. https://doi.org/10.1002/aisy.201900183
13. Isaka K, Tsumura K, Watanabe T et al (2019) Development of underwater drilling robot based on earthworm locomotion. IEEE Access 7:103127–103141. https://doi.org/10.1109/ACCESS.2019.2930994
14. Isava M, Winter AGV (2016) An experimental investigation of digging via localized fluidization, tested with Roboclam: a robot inspired by Atlantic razor clams. J Mech Design Trans ASME. https://doi.org/10.1115/1.4034218
15. Isava M, Winter VAG (2016) Razor clam-inspired burrowing in dry soil. Int J Non Linear Mech 81:30–39. https://doi.org/10.1016/j.ijnonlinmec.2015.12.005
16. Jung W, Choi SM, Kim W, Kim HY (2017) Reduction of granular drag inspired by self-burrowing rotary seeds. Phys Fluids 29:041702. https://doi.org/10.1063/1.4979998
17. Kobayashi T, Tshukagoshi H, Honda S, Kitagawa A (2011) Burrowing rescue robot referring to a mole's shoveling motion. In: Proceedings of the 8th JFPS international symposium on fluid power
18. Lee J, Lim H, Song S, Myung H (2019) Concept Design for Mole-Like Excavate Robot and Its Localization Method. In: 2019 7th international conference on robot intelligence technology and applications, RiTA 2019
19. Lee J, Tirtawardhana C, Myung H (2020) Development and analysis of digging and soil removing mechanisms for mole-bot: Bio-inspired mole-like drilling robot. In: IEEE international conference on intelligent robots and systems
20. Li D, Huang S, Tang Y et al (2021) Compliant fins for locomotion in granular media. IEEE Robot Autom Lett 6:5984–5991. https://doi.org/10.1109/LRA.2021.3084877
21. Maladen RD, Ding Y, Umbanhowar PB, et al (2011) Mechanical models of sandfish locomotion reveal principles of high performance subsurface sand-swimming. J R Soc Interface 8
22. Maladen RD, Umbanhowar PB, Ding Y, et al (2011) Granular lift forces predict vertical motion of a sand-swimming robot. In: Proceedings - IEEE International conference on robotics and automation
23. Mason GL, Salmon JE, McLeod S et al (2020) An overview of methods to convert cone index to bevameter parameters. J Terramech 87:1–9. https://doi.org/10.1016/j.jterra.2019.10.001
24. Mazzolai B, Mondini A, Corradi P et al (2011) A miniaturized mechatronic system inspired by plant roots for soil exploration. IEEE/ASME Trans Mechatron 16:201–212. https://doi.org/10.1109/TMECH.2009.2038997
25. Mickovski SB, Bengough AG, Bransby MF et al (2007) Material stiffness, branching pattern and soil matric potential affect the pullout resistance of model root systems. Eur J Soil Sci 58:1471–1481. https://doi.org/10.1111/j.1365-2389.2007.00953.x
26. Miklosovic DS, Murray MM, Howle LE, Fish FE (2004) Leading-edge tubercles delay stall on humpback whale (Megaptera novaeangliae) flippers. Phys Fluids 16:L39–L42. https://doi.org/10.1063/1.1688341
27. Mohajerani A, Bosnjak D, Bromwich D (2016) Analysis and design methods of screw piles: a review. Soils Found 56:115–128. https://doi.org/10.1016/j.sandf.2016.01.009
28. Nagaoka K, Kubota T, Otsuki M, Tanaka S (2009) Robotic screw explorer for lunar subsurface investigation: Dynamics modelling and experimental validation. In: 2009 International Conference on Advanced Robotics, ICAR 2009
29. Nagaoka K, Kubota T, Otsuki M, Tanaka S (2008) Experimental study on autonomous burrowing screw robot for subsurface exploration on the moon. In: 2008 IEEE/RSJ International Conference on Intelligent Robots and Systems, IROS
30. Okwae NKK, Marvi H, Tao J, Lee H (2020) Design, Fabrication, and Characterization of a Sand Burrowing Robot. Design, Fabrication, and Characterization of a Sand Burrowing Robot
31. Omori H, Nakamura T, Yada T, et al (2010) Excavation mechanism for a planetary underground explorer robot. In: Joint 41st international symposium on robotics and 6th German conference on robotics 2010, ISR/ROBOTIK 2010
32. Ortiz D, Gravish N, Tolley MT (2019) Soft robot actuation strategies for locomotion in granular substrates. IEEE Robot Autom Lett 4:2630–2636. https://doi.org/10.1109/LRA.2019.2911844
33 Rorres C (2000) The turn of the screw: optimal design of an archimedes screw. J Hydr Eng. 126:72–80. https://doi.org/10.1061/(asce)0733-9429(2000)126:1(72)
34. Sadeghi A, del Dottore E, Mondini A, Mazzolai B (2020) Passive morphological adaptation for obstacle avoidance in a self-growing robot produced by additive manufacturing. Soft Robot 7:85–94. https://doi.org/10.1089/soro.2019.0025
35. Sadeghi A, Tonazzini A, Popova L, Mazzolai B (2014) A novel growing device inspired by plant root soil penetration behaviors. PLoS One 9:e90139. https://doi.org/10.1371/journal.pone.0090139
36. Shorbagy M, El-Hadidi B, El-Bayoumi G, et al (2019) Experimental study on bio-inspired wings with tubercles. In: AIAA Scitech 2019 Forum
37. Tao JJ, Huang S, Tang Y (2020) SBOR: a minimalistic soft self-burrowing-out robot inspired by razor clams. Bioinspir Biomim 15:055003. https://doi.org/10.1088/1748-3190/ab8754
38. Texier BD, Ibarra A, Melo F (2017) Helical locomotion in a granular medium. Phys Rev Lett 119:068003. https://doi.org/10.1103/PhysRevLett.119.068003
39. Thoesen A, McBryan T, Mick D et al (2020) Comparative performance of granular scaling laws for lightweight grouser wheels in sand and lunar simulant. Powder Technol 373:336–346. https://doi.org/10.1016/j.powtec.2020.05.114
40. Thoesen A, McBryan T, Mick D et al (2020) Granular scaling laws for helically driven dynamics. Phys Rev E 102:032902. https://doi.org/10.1103/PhysRevE.102.032902
41. Thoesen A, Ramirez S, Marvi H (2018) Screw-Powered Propulsion in Granular Media: An Experimental and Computational Study. In: Proceedings - IEEE international conference on robotics and automation
42. Toyama W, Isaka K, Tsumura K, et al (2020) Effect of penetration force on drilling efficiency for seabed drilling robot. In: IEEE/ASME international conference on advanced intelligent mechatronics, AIM

43. Xu C, Liu W, Jiang S, et al (2018) Design of a hammer-driven type robot(HDR) for planetary subsurface exploration. In: 2017 IEEE International conference on robotics and biomimetics, ROBIO 2017
44. Yasuda S, Komatsu K, Tanaka S (2012) Self-turning screw mechanism for burying geophysical sensors under regolith. In: 11th international symposium on artificial intelligence, robotics and automation in space (i-SAIRAS 2012)
45. Zhang W, Li L, Jiang S et al (2020) Inchworm drilling system for planetary subsurface exploration. IEEE/ASME Trans Mechatron 25:837–847. https://doi.org/10.1109/TMECH.2019.2962500
46. Zheng YL, Zhang QB, Zhao J (2016) Challenges and opportunities of using tunnel boring machines in mining. Tunn Undergr Space Technol 57:287–299. https://doi.org/10.1016/j.tust.2016.01.023
47 Zyka K, Mohajerani A (2016) Composite piles: a review. Constr Build Mater 107:394–410

Publisher's Note Springer Nature remains neutral with regard to jurisdictional claims in published maps and institutional affiliations.

Springer Nature or its licensor (e.g. a society or other partner) holds exclusive rights to this article under a publishing agreement with the author(s) or other rightsholder(s); author self-archiving of the accepted manuscript version of this article is solely governed by the terms of such publishing agreement and applicable law.