CSEE 3827: Fundamentals of Computer Systems, Spring 2026

Lecture 3

Prof. Dan Rubenstein (danr@cs.columbia.edu)

Agenda (M&K 2.3-2.5)

- Standard Forms
  - Product-of-Sums (PoS)
  - Sum-of-Products (SoP)
    - converting between
  - Min-terms and Max-terms
- Simplification via Karnaugh Maps (K-maps)
  - 2, 3, and 4 variable
  - Implicants, Prime Implicants, Essential Prime Implicants
  - Using K-maps to reduce
  - PoS form
  - Don’t Care Conditions

Standard Forms

- There are many ways to express a boolean expression

$$
\begin{aligned}
F &= XYZ + XYZ + XZ \\
&= XY(Z + Z) + XZ \\
&= XZ
\end{aligned}
$$

- Generally: want most simplified (fewest # of literals)
- Sometimes, useful to consider other forms:
  - Can help lead to a simplified form
  - Can help with understanding of a particular function

Two principal standard forms

- Sum-of-products (SoP)
- Product-of-sums (PoS)
- We will deal mostly in this course with SoP

Product and sum terms

- Product term: logical AND of literals (e.g., $X\overline{Y}Z$)
- Sum term: logical OR of literals (e.g., $A + \overline{B} + C$)

Understanding Product and Sum Terms

- A **product term** evaluates to true only when all literals in the product term are True

  - X = study hard
  - Y = show up late for interview
  - Z = be a team player

Understanding Product and Sum Terms

- A **product term** evaluates to true only when all literals in the product term are True

  - X = study hard
  - Y = show up late for interview
  - Z = be a team player
  - The secret to success: $X\overline{Y}Z$:
    - (study hard) AND (don't show up late to interview) AND be a team player
    - i.e., (X=1, Y=0, Z=1)
    - i.e., X is True and Y is false and Z is true

Understanding Product and Sum Terms

- A **product term** evaluates to true only when all literals in the product term are True
  - X = study hard
  - Y = show up late for interview
  - Z = be a team player
  - The secret to success: $X\overline{Y}Z$:
    - (study hard) AND (don't show up late to interview) AND be a team player
    - i.e., (X=1, Y=0, Z=1)
    - i.e., X is True and Y is false and Z is true

- A **sum term** evaluates to true as long as some literals in the sum term are assigned a value (True or False)
  - A = Ace Exams
  - B = skip >20% of P-credit OH
  - C = Columbia removes "F" and "D" designations

Understanding Product and Sum Terms

- A **product term** evaluates to true only when all literals in the product term are True
  - X = study hard
  - Y = show up late for interview
  - Z = be a team player
  - The secret to success: $X\overline{Y}Z$:
    - (study hard) AND (don't show up late to interview) AND be a team player
    - i.e., (X=1, Y=0, Z=1)
    - i.e., X is True and Y is false and Z is true

- A **sum term** evaluates to true as long as some literals in the sum term are assigned a value (True or False)
  - A = Ace Exams
  - B = skip >20% of P-credit OH
  - C = Columbia removes "F" and "D" designations
  - To pass fundies: $A + B + \overline{C}$
    - i.e., (Ace Exams) OR (don't skip 20% of P-credit OH) OR (Columbia removes D,F)
    - i.e., A is True or B is false or C is true

Variables that “don’t matter”

- There may be other variables in the equation. If their value doesn’t matter, we can leave them out

  - X = study hard (SH)
  - Y = show up late for interview (SL)
  - Z = be a team player (TP)
  - W = wear a suit and tie (ST)

Variables that “don’t matter”

- There may be other variables in the equation. If their value doesn’t matter, we can leave them out

  - X = study hard (SH)
  - Y = show up late for interview (SL)
  - Z = be a team player (TP)
  - W = wear a suit and tie (ST)

  - Secret to success: $WX\overline{Y}Z + \overline{W}X\overline{Y}Z$
  - i.e., [SH & don’t SL & TP & ST] OR [SH & don’t SL & TP & don’t ST]
  - Recall:
    - $WX\overline{Y}Z + \overline{W}X\overline{Y}Z = (W+\overline{W})\, X\overline{Y}Z = X\overline{Y}Z$

Variables that “don’t matter”

- There may be other variables in the equation. If their value doesn’t matter, we can leave them out

  - X = study hard (SH)
  - Y = show up late for interview (SL)
  - Z = be a team player (TP)
  - W = wear a suit and tie (ST)

  - Secret to success: $WX\overline{Y}Z + \overline{W}X\overline{Y}Z$
  - i.e., [SH & don’t SL & TP & ST] OR [SH & don’t SL & TP & don’t ST]
  - Recall:
    - $WX\overline{Y}Z + \overline{W}X\overline{Y}Z = (W+\overline{W})\, X\overline{Y}Z = X\overline{Y}Z$

W	X	Y	Z	S
0	0	0	0	0
0	0	0	1	0
0	0	1	0	0
0	0	1	1	0
0	1	0	0	0
0	1	0	1	1
0	1	1	0	0
0	1	1	1	0
1	0	0	0	0
1	0	0	1	0
1	0	1	0	0
1	0	1	1	0
1	1	0	0	0
1	1	0	1	1
1	1	1	0	0
1	1	1	1	0

Variables that “don’t matter”

- There may be other variables in the equation. If their value doesn’t matter, we can leave them out

  - X = study hard (SH)
  - Y = show up late for interview (SL)
  - Z = be a team player (TP)
  - W = wear a suit and tie (ST)

  - Secret to success: $WX\overline{Y}Z + \overline{W}X\overline{Y}Z$
  - i.e., [SH & don’t SL & TP & ST] OR [SH & don’t SL & TP & don’t ST]
  - Recall:
    - $WX\overline{Y}Z + \overline{W}X\overline{Y}Z = (W+\overline{W})\, X\overline{Y}Z = X\overline{Y}Z$

W	X	Y	Z	S
0	0	0	0	0
0	0	0	1	0
0	0	1	0	0
0	0	1	1	0
0	1	0	0	0
0	1	0	1	1
0	1	1	0	0
0	1	1	1	0
1	0	0	0	0
1	0	0	1	0
1	0	1	0	0
1	0	1	1	0
1	1	0	0	0
1	1	0	1	1
1	1	1	0	0
1	1	1	1	0

Variables that “don’t matter”

- There may be other variables in the equation. If their value doesn’t matter, we can leave them out

  - X = study hard (SH)
  - Y = show up late for interview (SL)
  - Z = be a team player (TP)
  - W = wear a suit and tie (ST)

  - Secret to success: $WX\overline{Y}Z + \overline{W}X\overline{Y}Z$
  - i.e., [SH & don’t SL & TP & ST] OR [SH & don’t SL & TP & don’t ST]
  - Recall:
    - $WX\overline{Y}Z + \overline{W}X\overline{Y}Z = (W+\overline{W})\, X\overline{Y}Z = X\overline{Y}Z$

W	X	Y	Z	S
0	0	0	0	0
0	0	0	1	0
0	0	1	0	0
0	0	1	1	0
0	1	0	0	0
0	1	0	1	1
0	1	1	0	0
0	1	1	1	0
1	0	0	0	0
1	0	0	1	0
1	0	1	0	0
1	0	1	1	0
1	1	0	0	0
1	1	0	1	1
1	1	1	0	0
1	1	1	1	0

Wear a suit & study hard & show up late & don’t be team player —> not successful!

Variables that “don’t matter”

- There may be other variables in the equation. If their value doesn’t matter, we can leave them out

  - X = study hard (SH)
  - Y = show up late for interview (SL)
  - Z = be a team player (TP)
  - W = wear a suit and tie (ST)

  - Secret to success: $WX\overline{Y}Z + \overline{W}X\overline{Y}Z$
  - i.e., [SH & don’t SL & TP & ST] OR [SH & don’t SL & TP & don’t ST]
  - Recall:
    - $WX\overline{Y}Z + \overline{W}X\overline{Y}Z = (W+\overline{W})\, X\overline{Y}Z = X\overline{Y}Z$

W	X	Y	Z	S
0	0	0	0	0
0	0	0	1	0
0	0	1	0	0
0	0	1	1	0
0	1	0	0	0
0	1	0	1	1
0	1	1	0	0
0	1	1	1	0
1	0	0	0	0
1	0	0	1	0
1	0	1	0	0
1	0	1	1	0
1	1	0	0	0
1	1	0	1	1
1	1	1	0	0
1	1	1	1	0

Values in blue are what “force” S = 0. Only the rows with no blues result in S=1

Variables that “don’t matter”: Example 2

- There may be other variables in the equation. If their value doesn’t matter, we can leave them out
  - A = Ace Exams
  - B = skip >20% of P-credit OH
  - C = Columbia removes “F” and “D” designations
  - D = Skip lunch today
  - To pass fundies: $A+\overline{B}+C$

A	B	C	D	P
0	0	0	0	0
0	0	0	1	0
0	0	1	0	1
0	0	1	1	1
0	1	0	0	0
0	1	0	1	0
0	1	1	0	1
0	1	1	1	1
1	0	0	0	1
1	0	0	1	1
1	0	1	0	1
1	0	1	1	1
1	1	0	0	1
1	1	0	1	1
1	1	1	0	1
1	1	1	1	1

Inputs shown in red are what “force” P to be True

PoS & SoP

- Sum of products (SoP): OR of ANDs (OR of product terms)

$$\text{e.g., } F = \overline{Y} + \overline{X}Y\overline{Z} + XY$$

Order of precedence in this form: do all the ANDs before any ORs (don't need parentheses)

- Product of sums (PoS): AND of ORs (AND of sum terms)

$$\text{e.g., } G = X(\overline{Y} + Z)(X + Y + \overline{Z})$$

Order of precedence in this form: do all the ORs before any ANDs (Need parentheses)

Both forms at same time!

- If only have ANDs or only have ORs, then can be in both forms at once
- e.g., $A + B + \overline{C}$ is both SoP and PoS (3 SoP terms, 1 literal each; 1 PoS term, 3 literals)
- e.g., $AB\overline{C}$ also both SoP and PoS (3 PoS terms, 1 literal each; 1 SoP term, 3 literals)

PoS and SoP not always simplest form

- e.g., F = ABD + ABE + C(D+E)
  - (AB+C) (D+E) is simplest (fewest literals) form (5 literals)
    - know it's simplest because each literal appears only once
    - but not in SoP form or in PoS form
      - Why not? We AND first (AB) then OR (with C), then AND again (with D+E)
  - Turns out:
    - simplest SoP form: ABD + ABE + CD + CE (10 literals)
    - simplest PoS form: (A+C)(B+C)(D+E) is (6 literals)
  - Looking Ahead: SoP form will be important for this course!

Converting any expression to SoP

- Just “multiply” through and simplify

- e.g., $G = X(Y + Z)(X + Y + Z)$

  $= XYX + XYY + XYZ + XZX + XZY + XZZ$ and then simplify

  $= XY + XY + XYZ + XZ + XZY + XZ$ (removed duplicate literals in prod. term)

  $= XY + XZ$ (removed repeated prod. terms)

  This will get expression in SoP form, but it might not be the simplest SoP form

  e.g., $(X+Y)(X+Z) = XX + XZ + YX + YZ = X + XZ + YX + YZ$

  This can in fact be simplified to $X + YZ$ (remember $X+XZ = X$, $X+YX=X$)

Converting from SoP to PoS

- Complement, multiply through, complement (swap + and · ops, flip literals)

- e.g., $F = \overline{Y}\,\overline{Z} + X\overline{Y}Z + XY\overline{Z}$

  swap ops, flip literals

  - $\overline{F} = (Y+Z)(\overline{X} + Y + \overline{Z})(\overline{X} + \overline{Y} + Z)$

  simplify $\overline{F}$

  - $= YZ + \overline{X}Y + \overline{X}Z$ (after lots of simplifying)

  swap ops, flip literals

  - $F = (\overline{Y}+\overline{Z})(X+\overline{Y})(X+\overline{Z})$

  - Why did this work?

    - Since $\overline{F} = YZ + \overline{X}Y + \overline{X}Z$ in SoP form, by DeMorgan, or Dual + flip literals:

    - Complementing $\overline{F}$ in SoP form yields F in PoS form

Minterms and Maxterms

Minterms

e.g., Minterms for 3 variables A,B,C

A	B	C	minterm	
0	0	0	m0	$\bar{A}\bar{B}\bar{C}$
0	0	1	m1	$\bar{A}\bar{B}C$
0	1	0	m2	$\bar{A}B\bar{C}$
0	1	1	m3	$\bar{A}BC$
1	0	0	m4	$A\bar{B}\bar{C}$
1	0	1	m5	$A\bar{B}C$
1	1	0	m6	$AB\bar{C}$
1	1	1	m7	ABC

- A product term in which all variables appear exactly once, either complemented or uncomplemented.
- Each minterm evaluates to 1 for exactly one assignment of values to all variables (one row in truth table), 0 for all others.
- e.g., for what values of A,B,C does $\bar{A}\bar{B}C$ evaluate to 1?

Minterms

e.g., Minterms for 3 variables A,B,C

A	B	C	minterm	
0	0	0	m0	$\bar{A}\bar{B}\bar{C}$
0	0	1	m1	$\bar{A}\bar{B}C$
0	1	0	m2	$\bar{A}B\bar{C}$
0	1	1	m3	$\bar{A}BC$
1	0	0	m4	$A\bar{B}\bar{C}$
1	0	1	m5	$A\bar{B}C$
1	1	0	m6	$AB\bar{C}$
1	1	1	m7	ABC

- A product term in which all variables appear exactly once, either complemented or uncomplemented.
- Each minterm evaluates to 1 for exactly one assignment of values to all variables (one row in truth table), 0 for all others.
- e.g., for what values of A,B,C does $\bar{A}\bar{B}C$ evaluate to 1?
- Ans: A=0, B=0, C=1 (that's the only one)

  E.g., A=0, B=0, C=0, $\bar{A}\bar{B}C = 0$ (because of C)

Minterms

e.g., Minterms for 3 variables A,B,C

A	B	C	minterm	
0	0	0	m0	$\bar{A}\bar{B}\bar{C}$
0	0	1	m1	$\bar{A}\bar{B}C$
0	1	0	m2	$\bar{A}B\bar{C}$
0	1	1	m3	$\bar{A}BC$
1	0	0	m4	$A\bar{B}\bar{C}$
1	0	1	m5	$A\bar{B}C$
1	1	0	m6	$AB\bar{C}$
1	1	1	m7	ABC

- A product term in which all variables appear exactly once, either complemented or uncomplemented.
- Each minterm evaluates to 1 for exactly one assignment of values to all variables (one row in truth table), 0 for all others.
- Each product term denoted by mX where X corresponds to the row of the truth table where variable value assignments cause that minterm to equal 1.

Minterm examples (with 3 variables, A,B,C)

- ABC is a minterm, and is true when and only when A=1,B=1,C=1

- $\overline{A}B\overline{C}$ is a minterm and is true when and only when A=0,B=1, C=0

- A function can be described as a sum of its minterms
  - e.g., $F = B\,(A \oplus \overline{C}) = B(AC + \overline{A}\,\overline{C}) = ABC + \overline{A}B\overline{C}$
    - F=1 when ABC is true OR $\overline{A}B\overline{C}$ is true
      - i.e., F = 1 when A=1 & B=1 & C=1 OR when A=0 & B=1 & C=0
    - F = 0 otherwise

F evaluates to 1 for a given assignment of inputs if and only if its sum of minterms contains the minterm for that assignment

A few more Minterm examples (of 3 variables A,B,C)

- $G(A,B,C) = BC$ (G's value is independent of A)
  - $G = ABC + \overline{A}BC$ (G is defined over A,B,C, minterms contain all vars)
    - G = 1 when & only when A=1,B=1,C=1 OR A=0,B=1,C=1
- $H(A,B,C) = A$
  - $H = ABC + AB\overline{C} + A\overline{B}C + A\overline{B}\,\overline{C}$ (all combos of B,C when A=1)
- $F = A + BC$
  - $= H + G = \underbrace{A\overline{B}\,\overline{C} + A\overline{B}C + A\overline{B}\,\overline{C} + \overbrace{ABC + \overline{A}BC}^{BC}}_{A}$ (note minterm ABC repeated)

Minterms to describe a function

- *sometimes also called a* ***minterm expansion: OR (SUM) appropriate minterms together***

This “term” is TRUE when A=0,B=1,C=0

Hence F=1 when A=0,B=1,C=0

$$F = \bar{A}\bar{B}\bar{C} + \bar{A}\bar{B}C + \bar{A}B\bar{C} + A\bar{B}\bar{C} + A\bar{B}C$$

A	B	C	F	$\bar{F}$
0	0	0	1	0
0	0	1	1	0
0	1	0	1	0
0	1	1	0	1
1	0	0	1	0
1	0	1	1	0
1	1	0	0	1
1	1	1	0	1

$$\bar{F} = \bar{A}BC + AB\bar{C} + ABC$$

Function and its complement function use all minterms, share none in common

Sum of minterms form

- The logical OR of all minterms for which F = 1.

A	B	C	minterm		F
0	0	0	m0	$\bar{A}\bar{B}\bar{C}$	0
0	0	1	m1	$\bar{A}\bar{B}C$	1
0	1	0	m2	$\bar{A}B\bar{C}$	1
0	1	1	m3	$\bar{A}BC$	1
1	0	0	m4	$A\bar{B}\bar{C}$	0
1	0	1	m5	$A\bar{B}C$	0
1	1	0	m6	$AB\bar{C}$	0
1	1	1	m7	ABC	0

$$F = \bar{A}\bar{B}C + \bar{A}B\bar{C} + \bar{A}BC$$

$$= m1 + m2 + m3$$

$$= \sum m(1,2,3)$$

Minterm form cont'd

(variables appear once in each minterm)

A	B	C	F	$\overline{F}$	minterm
0	0	0	1	0	m0 $\overline{A}\overline{B}\overline{C}$
0	0	1	1	0	m1 $\overline{A}\overline{B}C$
0	1	0	1	0	m2 $\overline{A}B\overline{C}$
0	1	1	0	1	m3 $\overline{A}BC$
1	0	0	1	0	m4 $A\overline{B}\overline{C}$
1	0	1	1	0	m5 $A\overline{B}C$
1	1	0	0	1	m6 $AB\overline{C}$
1	1	1	0	1	m7 ABC

$$F = \overline{A}\overline{B}\overline{C} + \overline{A}\overline{B}C + \overline{A}B\overline{C} + A\overline{B}\overline{C} + A\overline{B}C$$

$$= m0 + m1 + m2 + m4 + m5$$

$$= \sum m(0,1,2,4,5)$$

$$\overline{F} = \overline{A}BC + AB\overline{C} + ABC$$

$$= m3 + m6 + m7$$

$$= \sum m(3,6,7)$$

Minterms as a circuit

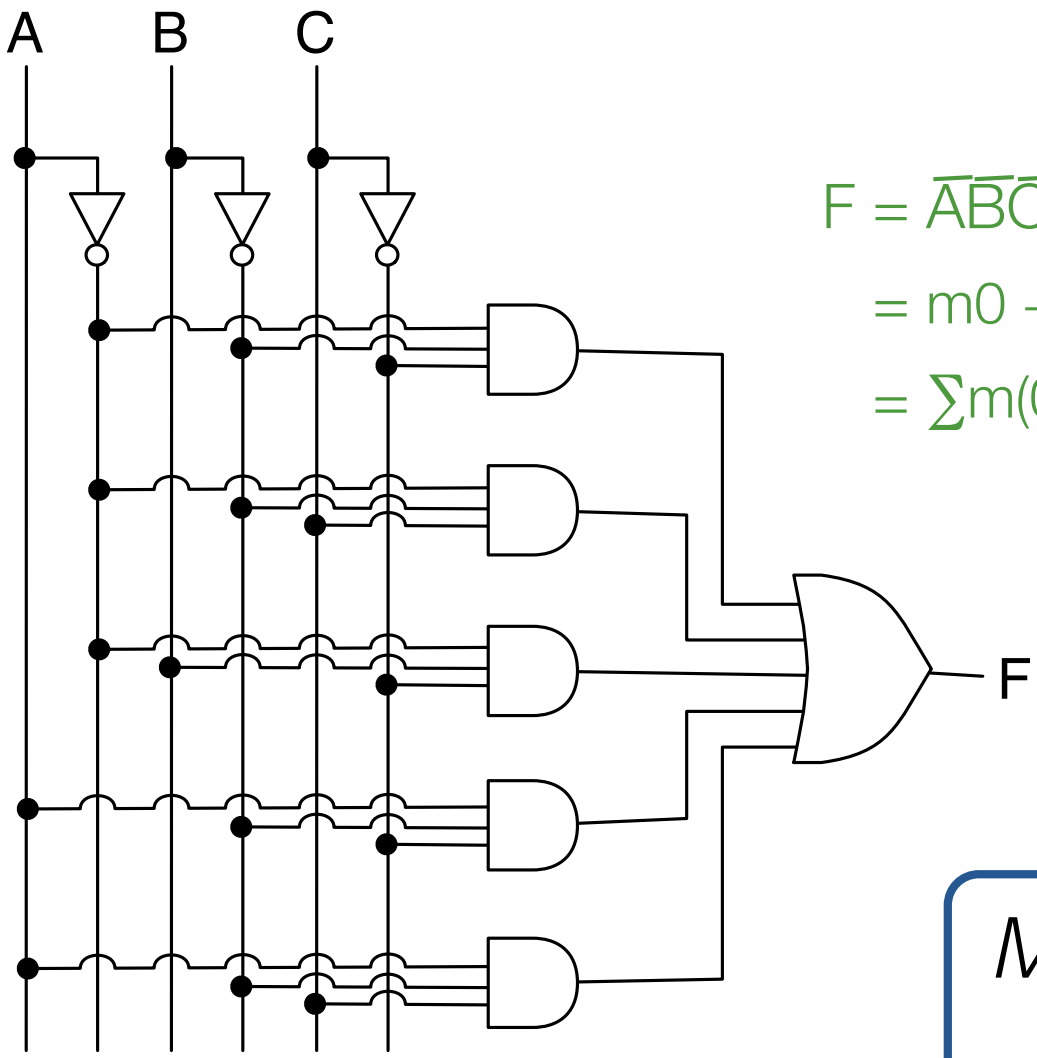

$$F = \overline{A}\,\overline{B}\,\overline{C} + \overline{A}\,\overline{B}C + \overline{A}B\overline{C} + A\overline{B}\,\overline{C} + A\overline{B}C$$

$$= m0 + m1 + m2 + m4 + m5$$

$$= \sum m(0,1,2,4,5)$$

Minterm form is not simplified form!

Simplest Form v. SoP Form v. Minterm Form

- Can be the same, but not always

- e.g., $F = WX(Y+Z)$ (note 4 variables)
  - SoP form: $WXY + WXZ$
  - Minterm form: $WXYZ + WXY\overline{Z} + WX\overline{Y}Z$

- e.g., $F = WX(Y\overline{Z} + \overline{Y}Z)$
  - SoP form: $WX\overline{Y}Z + WXY\overline{Z}$
  - Minterm form: $WX\overline{Y}Z + WXY\overline{Z}$

Maxterms - “Dual” of minterms

A	B	C	maxterm	
0	0	0	M0	$A+B+C$
0	0	1	M1	$A+B+\bar{C}$
0	1	0	M2	$A+\bar{B}+C$
0	1	1	M3	$A+\bar{B}+\bar{C}$
1	0	0	M4	$\bar{A}+B+C$
1	0	1	M5	$\bar{A}+B+\bar{C}$
1	1	0	M6	$\bar{A}+\bar{B}+C$
1	1	1	M7	$\bar{A}+\bar{B}+\bar{C}$

- A sum term in which all variables appear once, either complemented or uncomplemented.
- Each maxterm evaluates to 0 for exactly one variable assignment, 1 for all others.
- Denoted by MX where X corresponds to the variable assignment for which MX = 0.

Maxterms: not as intuitive as minterms

- $F = \overline{A}\,\overline{C} + \overline{B}$
  - turns out F = 1 when (A=1 or B=0 or C=0) AND (A=0 or B=0 or C=1) AND (A=0 or B=0 or C=0),
  - i.e., $F = (A+\overline{B}+\overline{C})(\overline{A}+\overline{B}+C)(\overline{A}+\overline{B}+\overline{C})$
- Think of it as forcing F to 0 when F doesn't equal a maxterm
  - e.g., F = 0 when A=1,B=1,C=1.
  - In other words, for F=1, it is necessary (but not sufficient) that either A=0 OR B=0 OR C=0, i.e., $(\overline{A}+\overline{B}+\overline{C} = 1)$ AND some other conditions
  - Thus, the maxterm $(\overline{A}+\overline{B}+\overline{C})$ is included in the product for F

Maxterm description of a function

- *sometimes also called* ***conjunctive normal form*** *(CNF)*
- *sometimes also called a* ***maxterm expansion***

This "term" is FALSE when
A=1 & B=1 & C=0

$$F = (A+\overline{B}+\overline{C})\ (\overline{A}+\overline{B}+C)\ (\overline{A}+\overline{B}+\overline{C})$$

A	B	C	F	$\overline{F}$
0	0	0	1	0
0	0	1	1	0
0	1	0	1	0
0	1	1	0	1
1	0	0	1	0
1	0	1	1	0
1	1	0	0	1
1	1	1	0	1

Force to 0

When inputs "satisfy" a Maxterm, the function equals 0

Product of maxterms form

- The logical AND of all maxterms for which F = 0.

A	B	C	maxterm		F
0	0	0	M0	$A+B+C$	0
0	0	1	M1	$A+B+\overline{C}$	1
0	1	0	M2	$A+\overline{B}+C$	1
0	1	1	M3	$A+\overline{B}+\overline{C}$	1
1	0	0	M4	$\overline{A}+B+C$	0
1	0	1	M5	$\overline{A}+B+\overline{C}$	0
1	1	0	M6	$\overline{A}+\overline{B}+C$	0
1	1	1	M7	$\overline{A}+\overline{B}+\overline{C}$	0

$$F = (A+B+C)\,(\overline{A}+B+C)\,(\overline{A}+B+\overline{C})\,(\overline{A}+\overline{B}+C)\,(\overline{A}+\overline{B}+\overline{C})$$

$$= (M0)\,(M4)\,(M5)\,(M6)\,(M7)$$

$$= \prod M(0,4,5,6,7)$$

Summary of Minterms and Maxterms

	F	$\overline{F}$
Minterms (SOP)	$\sum m(F = 1)$	$\sum m(F = 0)$
Maxterms (POS)	$\prod M(F = 0)$	$\prod M(F = 1)$

One final example

A	B	C	F	$\overline{F}$
0	0	0	0	1
0	0	1	1	0
0	1	0	0	1
0	1	1	1	0
1	0	0	0	1
1	0	1	1	0
1	1	0	1	0
1	1	1	0	1

	F	$\overline{F}$
Minterms (SOP)		
Maxterms (POS)		

One final example

A	B	C	F	$\overline{F}$	m/M
0	0	0	0	1	0
0	0	1	1	0	1
0	1	0	0	1	2
0	1	1	1	0	3
1	0	0	0	1	4
1	0	1	1	0	5
1	1	0	1	0	6
1	1	1	0	1	7

	F	$\overline{F}$
Sum of products (SOP)	$\sum m(1,3,5,6)$	$\sum m(0,2,4,7)$
Product of sums (POS)	$\prod M(0,2,4,7)$	$\prod M(1,3,5,6)$

Converting between canonical forms

	F	$\overline{F}$
Minterms (SOP)	$\sum m(F = 1)$	$\sum m(F = 0)$
Maxterms (POS)	$\prod M(F = 0)$	$\prod M(F = 1)$

DeMorgans: same terms

$$\overline{\sum m(F = 1)} = \prod M(F = 1)$$

Simplification Methods

Simplification Example

- Simplify $F = XY + X\overline{Y} + \overline{X}Y$

X	Y	F	m
0	0	0	$\overline{X}\overline{Y}$
0	1	1	$\overline{X}Y$
1	0	1	$X\overline{Y}$
1	1	1	XY

- $F = X(Y+\overline{Y}) + \overline{X}Y = \boxed{X + \overline{X}Y}$

- Can this be simplified further?

Simplification example cont'd

- $F = X + \overline{X}Y$

- Recall important identity: $X + XY = X$ or (flipped around) $X = X+XY$

  - so $F = X + \overline{X}Y = (X + XY) + \overline{X}Y = X + XY + \overline{X}Y = X + (X + \overline{X})Y = X + Y$

- so most simplified, $F = X+Y$

X	Y	F	m
0	0	0	$\overline{X}\overline{Y}$
0	1	1	$\overline{X}Y$
1	0	1	$X\overline{Y}$
1	1	1	XY

The point: simplification not always so easy / obvious
Additional tools are needed!

Karnaugh Maps

Karnaugh Maps (K-Maps)

- K-maps are a nice structure to provide simplified sum-of-product (or product-of-sums) solutions
  - Not necessarily most simplified, but it's good enough (for this course)
- We will K-maps to provide simplified SoP form of functions with up to 4 inputs

Karnaugh maps (a.k.a., K-maps)

- All functions can be expressed with a K-map

- There is one square in the map for each minterm in a function's truth table

X	Y	F
0	0	m0
0	1	m1
1	0	m2
1	1	m3

X \ Y	0	1
0	m0 $\overline{X}\,\overline{Y}$	m1 $\overline{X}Y$
1	m2 $X\overline{Y}$	m3 XY

A K-map is just a 2-dimensional way of representing the function in a truth table

Karnaugh maps

- All functions can be expressed with a map

- There is one square in the map for each minterm in a function's truth table

X	Y	F
0	0	m0
0	1	m1
1	0	m2
1	1	m3

X \ Y	0	1
0	m0 $\overline{X}\,\overline{Y}$	m1 $\overline{X}Y$
1	m2 $X\overline{Y}$	m3 XY

$X=0\ (\overline{X})$

$X=1\ (X)$

A K-map is just a 2-dimensional way of representing the function in a truth table

Karnaugh maps

- All functions can be expressed with a map

- There is one square in the map for each minterm in a function's truth table

X	Y	F
0	0	m0
0	1	m1
1	0	m2
1	1	m3

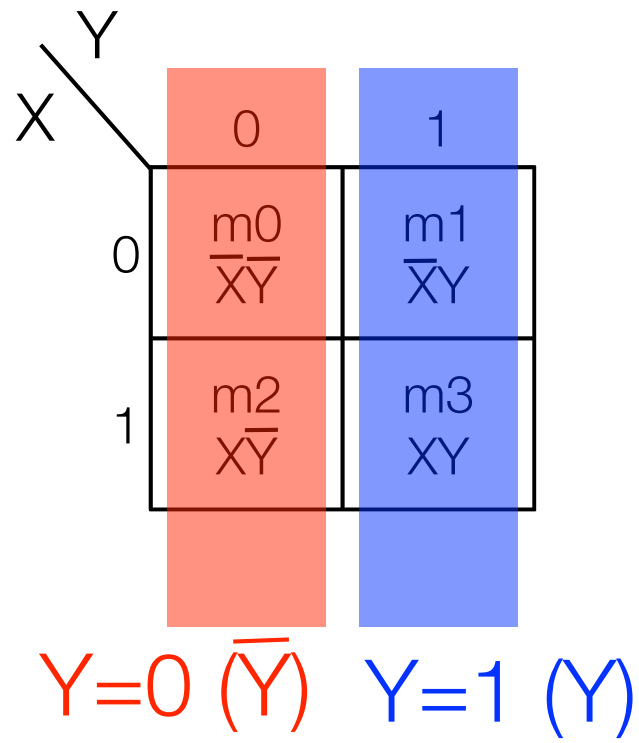

Karnaugh maps express functions

- Fill out table with value of a function

X	Y	F
0	0	0
0	1	1
1	0	1
1	1	1

X \ Y	0	1
0	0	1
1	1	1

Karnaugh maps express functions

- Fill out table with value of a function

X	Y	F
0	0	0
0	1	1
1	0	1
1	1	1

X \ Y	0	1
0	0	1
1	1	1

X	Y	m	F
0	0	m0	0
0	1	m1	1
1	0	m2	1
1	1	m3	1

$$F=\sum m(1,2,3) = \bar{X}Y + X\bar{Y} + XY$$

Karnaugh maps express functions

- Fill out table with value of a function

X	Y	F
0	0	0
0	1	1
1	0	1
1	1	1

X \ Y	0	1
0	0	1
1	1	1

X	Y	m	F
0	0	m0	0
0	1	m1	1
1	0	m2	1
1	1	m3	1

$$F=\sum m(1,2,3) = \bar{X}Y + X\bar{Y} + XY$$

Karnaugh maps express functions

- Fill out table with value of a function

$X\overline{Y} + XY = X$

To simplify, when both minterms XY and XY evaluate to 1, they can be "replaced" in the expression by X

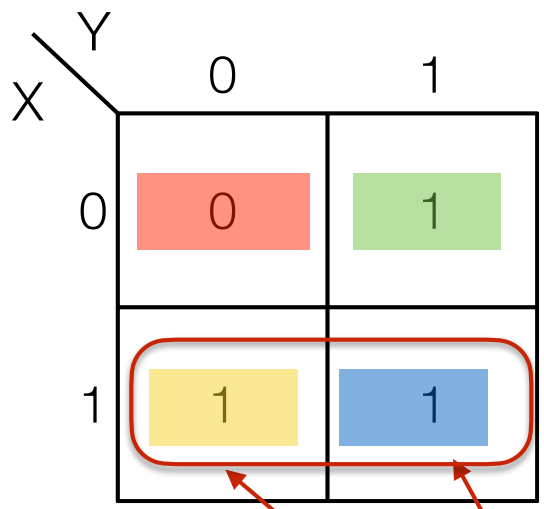

X	Y	m	F
0	0	m0	0
0	1	m1	1
1	0	m2	1
1	1	m3	1

$F = \sum m(1,2,3) = \overline{X}Y + X\overline{Y} + XY$

Simplification using a k-map

- Whenever two squares share an edge and both are 1, those two terms can be combined to form a single term with one less variable

X \ Y	0	1
0	0	1
1	1	1

$F = \overline{X}Y + X\overline{Y} + XY$

X \ Y	0	1
0	0	1
1	1	1

$F = X + \overline{X}Y$

(combined $X\overline{Y} + XY = X$)

X \ Y	0	1
0	0	1
1	1	1

$F = Y + X\overline{Y}$

(combined $\overline{X}Y + XY = Y$)

X \ Y	0	1
0	0	1
1	1	1

$F = X + Y$

(combined $X\overline{Y} + XY = X$ and $\overline{X}Y + XY = Y$)

Simplification using a k-map

- Whenever two squares share an edge and both are 1, those two terms can be combined to form a single term with one less variable

X \ Y	0	1
0	0	1
1	1	1

$F = \overline{X}Y + X\overline{Y} + XY$

X \ Y	0	1
0	0	1
1	1	1

$F = X + \overline{X}Y$

(combined $X\overline{Y} + XY = X$)

X \ Y	0	1
0	0	1
1	1	1

$F = Y + X\overline{Y}$

(combined $\overline{X}Y + XY = Y$)

X \ Y	0	1
0	0	1
1	1	1

$F = X + Y$

(combined $X\overline{Y} + XY = X$ and $\overline{X}Y + XY = Y$)

(= $X\overline{Y} + XY + \overline{X}Y + XY$): XY term "repeated" to obtain simplified form

Simplification using a k-map (2)

- “Circle” contiguous squares of 1s (# of squares covered must be a power of 2)
- There is a correspondence between circles on a k-map and product terms in a function expression
- The bigger the circle, the simpler the term
- Add circles (and terms) until all 1s on the k-map are circled

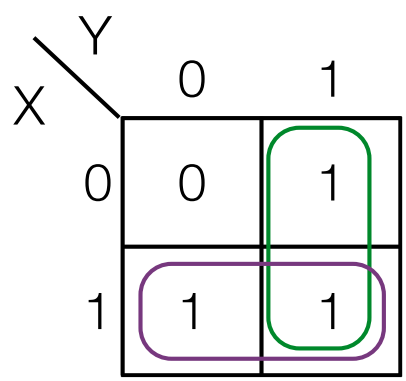

$F = X + Y$

SoP / minterm recap

K-map Recap

W	X	Y	Z	F
0	0	0	0	0
0	0	0	1	0
0	0	1	0	1
0	0	1	1	0
0	1	0	0	0
0	1	0	1	0
0	1	1	0	1
0	1	1	1	0
1	0	0	0	1
1	0	0	1	0
1	0	1	0	1
1	0	1	1	0
1	1	0	0	1
1	1	0	1	1
1	1	1	0	1
1	1	1	1	1

- Start with some arbitrary function (in this case, of 4 variables, F(W,X,Y,Z))
- Function is defined for all possible assignments of {0,1} to each of W,X,Y,Z

K-map Recap

W	X	Y	Z	F
0	0	0	0	0
0	0	0	1	0
0	0	1	0	1
0	0	1	1	0
0	1	0	0	0
0	1	0	1	0
0	1	1	0	1
0	1	1	1	0
1	0	0	0	1
1	0	0	1	0
1	0	1	0	1
1	0	1	1	0
1	1	0	0	1
1	1	0	1	1
1	1	1	0	1
1	1	1	1	1

- Start with some arbitrary function (in this case, of 4 variables, F(W,X,Y,Z))
- Function is defined for all possible assignments of {0,1} to each of W,X,Y,Z
- e.g., when W=0,X=1,Y=1,Z=0, then F=1 (F(0,1,1,0) = 1)

K-map Recap

W	X	Y	Z	F
0	0	0	0	0
0	0	0	1	0
0	0	1	0	1
0	0	1	1	0
0	1	0	0	0
0	1	0	1	0
0	1	1	0	1
0	1	1	1	0
1	0	0	0	1
1	0	0	1	0
1	0	1	0	1
1	0	1	1	0
1	1	0	0	1
1	1	0	1	1
1	1	1	0	1
1	1	1	1	1

- Start with some arbitrary function (in this case, of 4 variables, F(W,X,Y,Z))
- Function is defined for all possible assignments of {0,1} to each of W,X,Y,Z
- e.g., when W=0,X=1,Y=1,Z=0, then F=1 (F(0,1,1,0) = 1)
- When represented as sum of minterms, will include term $\overline{W}XY\overline{Z}$
  - F = yada yada + $\overline{W}XY\overline{Z}$ will evaluate to 1 when W=0,X=1,Y=1,Z=0

K-map Recap

W	X	Y	Z	F
0	0	0	0	0
0	0	0	1	0
0	0	1	0	1
0	0	1	1	0
0	1	0	0	0
0	1	0	1	0
0	1	1	0	1
0	1	1	1	0
1	0	0	0	1
1	0	0	1	0
1	0	1	0	1
1	0	1	1	0
1	1	0	0	1
1	1	0	1	1
1	1	1	0	1
1	1	1	1	1

- Start with some arbitrary function (in this case, of 4 variables, F(W,X,Y,Z))
- Function is defined for all possible assignments of {0,1} to each of W,X,Y,Z
- e.g., when W=0,X=1,Y=1,Z=1, then F=0
- When represented as sum of minterms, F cannot include $\overline{W}XYZ$
- because yada yada + $\overline{W}XYZ$ will evaluate to 1 when W=0,X=1,Y=1,Z=1

K-map Recap

W	X	Y	Z	F
0	0	0	0	0
0	0	0	1	0
0	0	1	0	1
0	0	1	1	0
0	1	0	0	0
0	1	0	1	0
0	1	1	0	1
0	1	1	1	0
1	0	0	0	1
1	0	0	1	0
1	0	1	0	1
1	0	1	1	0
1	1	0	0	1
1	1	0	1	1
1	1	1	0	1
1	1	1	1	1

- As sum of minterms:
- $F = \bar{W}\bar{X}Y\bar{Z} + \bar{W}XY\bar{Z} + W\bar{X}\bar{Y}\bar{Z} + W\bar{X}Y\bar{Z} + WX\bar{Y}\bar{Z} + WX\bar{Y}Z + WXY\bar{Z} + WXYZ$

K-map Recap

W	X	Y	Z	F
0	0	0	0	0
0	0	0	1	0
0	0	1	0	1
0	0	1	1	0
0	1	0	0	0
0	1	0	1	0
0	1	1	0	1
0	1	1	1	0
1	0	0	0	1
1	0	0	1	0
1	0	1	0	1
1	0	1	1	0
1	1	0	0	1
1	1	0	1	1
1	1	1	0	1
1	1	1	1	1

- As sum of minterms:
- $F = \bar{W}\bar{X}Y\bar{Z} + \bar{W}XY\bar{Z} + W\bar{X}\bar{Y}\bar{Z} + W\bar{X}Y\bar{Z} + WX\bar{Y}\bar{Z} + WX\bar{Y}Z + WXY\bar{Z} + WXYZ$
- But maybe we can reduce further by combining minterms to form product terms with fewer variables
  - e.g., $\bar{W}\bar{X}Y\bar{Z} + W\bar{X}Y\bar{Z} = \bar{X}Y\bar{Z}$
  - Can reduce two 4-literal terms with a single 3-literal term!
- Q: How do we find the “best” set of product terms that “cover” all the minterms we need to include to describe our function?
- A: K-map

Recall: Simplification using a 2-variable k-map

- Whenever two squares share an edge and both are 1, those two terms can be combined to form a single term with one less variable

X \ Y	0	1
0	0	1
1	1	1

$F = \overline{X}Y + X\overline{Y} + XY$

X \ Y	0	1
0	0	1
1	1	1

$F = X + \overline{X}Y$

(combined $X\overline{Y} + XY = X$)

X \ Y	0	1
0	0	1
1	1	1

$F = Y + X\overline{Y}$

(combined $\overline{X}Y + XY = Y$)

X \ Y	0	1
0	0	1
1	1	1

$F = X + Y$

(combined $X\overline{Y} + XY = X$ and $\overline{X}Y + XY = Y$)

Best Option!

(= $X\overline{Y} + XY + \overline{X}Y + XY$): XY term "repeated" to obtain simplified form

3-variable Karnaugh maps

- Use gray ordering on edges with multiple variables
- Gray encoding: order of values such that only one bit changes at a time
- Two minterms are considered adjacent if they differ in only one variable (this means maps “wrap”)

X \ YZ	00	01	11	10
0	m0 $\bar{X}\bar{Y}\bar{Z}$	m1 $\bar{X}\bar{Y}Z$	m3 $\bar{X}YZ$	m2 $\bar{X}Y\bar{Z}$
X=1 1	m4 $X\bar{Y}\bar{Z}$	m5 $X\bar{Y}Z$	m7 XYZ	m6 $XY\bar{Z}$

Or just

X

3-variable Karnaugh maps

- Use gray ordering on edges with multiple variables
- Gray encoding: order of values such that only one bit changes at a time
- Two minterms are considered adjacent if they differ in only one variable (this means maps “wrap”)

X \ YZ	00	01	11	10
X=0 0	m0 $\overline{X}\,\overline{Y}\,\overline{Z}$	m1 $\overline{X}\,\overline{Y}Z$	m3 $\overline{X}YZ$	m2 $\overline{X}Y\overline{Z}$
1	m4 $X\overline{Y}\,\overline{Z}$	m5 $X\overline{Y}Z$	m7 XYZ	m6 $XY\overline{Z}$

Or just

$\overline{X}$

3-variable Karnaugh maps

- Use gray ordering on edges with multiple variables
- Gray encoding: order of values such that only one bit changes at a time
- Two minterms are considered adjacent if they differ in only one variable (this means maps “wrap”)

Y=1

X \ YZ	00	01	11	10
0	m0 $\bar{X}\bar{Y}\bar{Z}$	m1 $\bar{X}\bar{Y}Z$	m3 $\bar{X}YZ$	m2 $\bar{X}Y\bar{Z}$
1	m4 $X\bar{Y}\bar{Z}$	m5 $X\bar{Y}Z$	m7 XYZ	m6 $XY\bar{Z}$

Or just

Y

3-variable Karnaugh maps

- Use gray ordering on edges with multiple variables
- Gray encoding: order of values such that only one bit changes at a time
- Two minterms are considered adjacent if they differ in only one variable (this means maps “wrap”)

Y=0

X \ YZ	00	01	11	10
0	m0 $\bar{X}\bar{Y}\bar{Z}$	m1 $\bar{X}\bar{Y}Z$	m3 $\bar{X}YZ$	m2 $\bar{X}Y\bar{Z}$
1	m4 $X\bar{Y}\bar{Z}$	m5 $X\bar{Y}Z$	m7 XYZ	m6 $XY\bar{Z}$

Or just

$\overline{Y}$

3-variable Karnaugh maps

- Use gray ordering on edges with multiple variables
- Gray encoding: order of values such that only one bit changes at a time
- Two minterms are considered adjacent if they differ in only one variable (this means maps “wrap”)

X \ YZ	00	01	11	10
0	m0 $\bar{X}\bar{Y}\bar{Z}$	m1 $\bar{X}\bar{Y}Z$	m3 $\bar{X}YZ$	m2 $\bar{X}Y\bar{Z}$
1	m4 $X\bar{Y}\bar{Z}$	m5 $X\bar{Y}Z$	m7 XYZ	m6 $XY\bar{Z}$

Z=1

Or just

Z

3-variable Karnaugh maps

- Use gray ordering on edges with multiple variables
- Gray encoding: order of values such that only one bit changes at a time
- Two minterms are considered adjacent if they differ in only one variable (this means maps “wrap”)

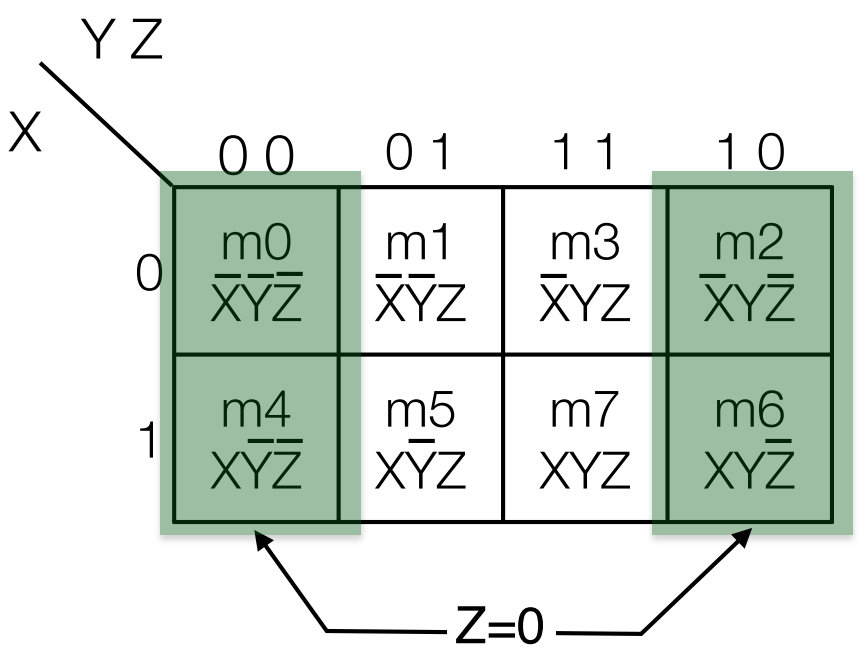

Or just

$\overline{Z}$

3-variable Karnaugh maps

- Use gray ordering on edges with multiple variables
- Gray encoding: order of values such that only one bit changes at a time
- Two minterms are considered adjacent if they differ in only one variable (this means maps “wrap”)

X \ YZ	00	01	11	10
0	m0 $\overline{X}\overline{Y}\overline{Z}$	m1 $\overline{X}\overline{Y}Z$	m3 $\overline{X}YZ$	m2 $\overline{X}Y\overline{Z}$
X=1 1	m4 $X\overline{Y}\overline{Z}$	m5 $X\overline{Y}Z$	m7 XYZ	m6 $XY\overline{Z}$

Z=0

X=1 and Z=0

Or just

$X\overline{Z}$

4-variable Karnaugh maps

- Extension of 3-variable maps

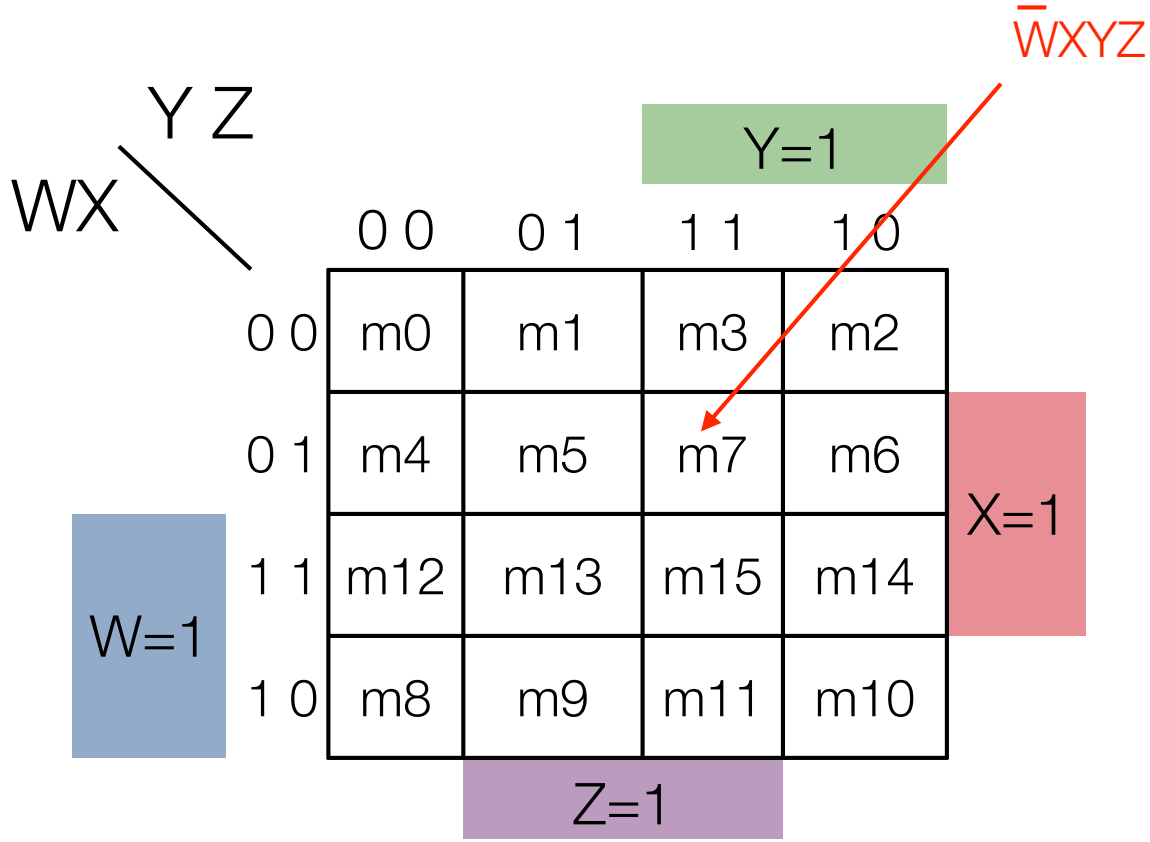

Product terms are just 2^i x 2^j boxes (that might wrap around)

- A product term, which, viewed in a K-Map is a 2^i x 2^j size "rectangle" (possibly wrapping around) where i=0,1,2, j=0,1,2

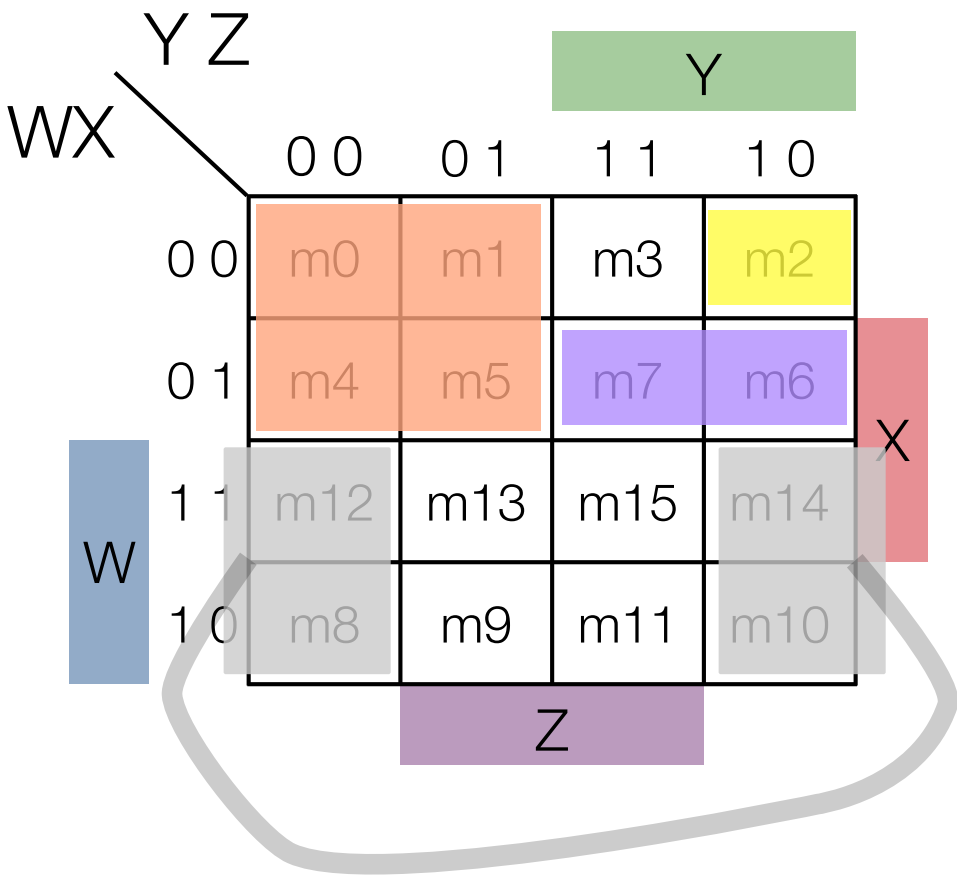

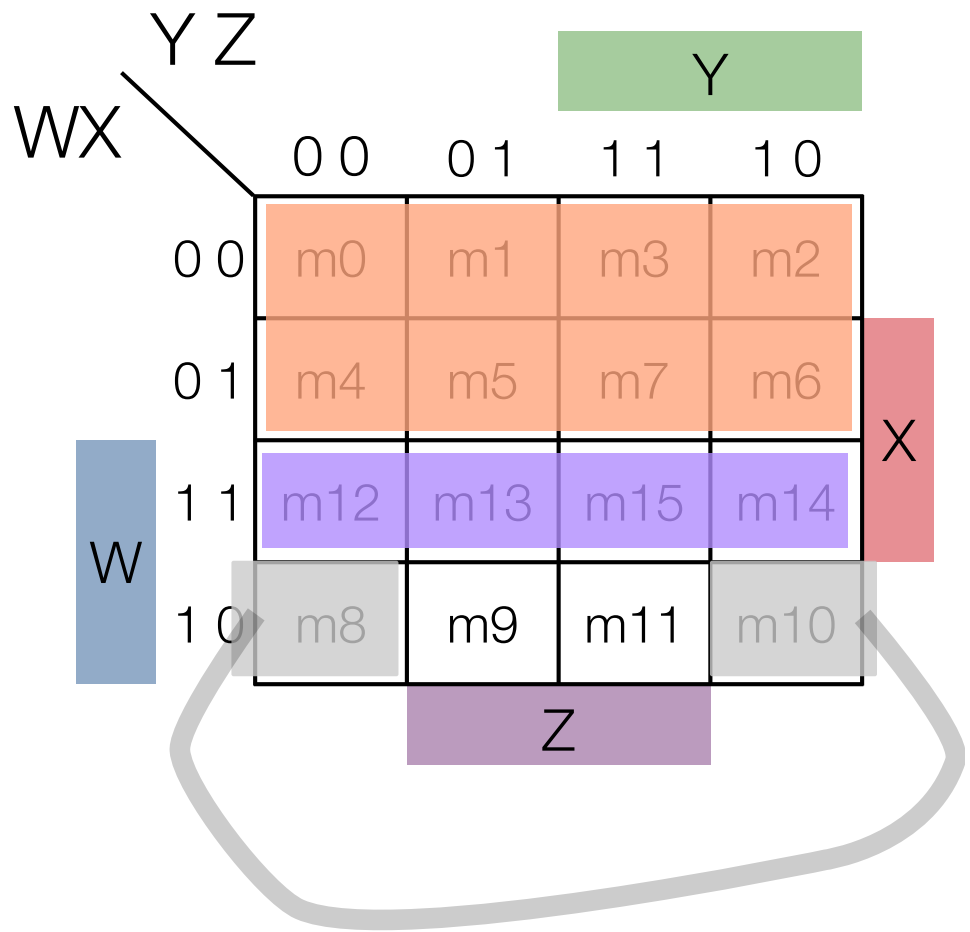

Product terms are just 2^i x 2^j boxes (that might wrap around)

- A product term, which, viewed in a K-Map is a 2^i x 2^j size "rectangle" (possibly wrapping around) where i=0,1,2, j=0,1,2

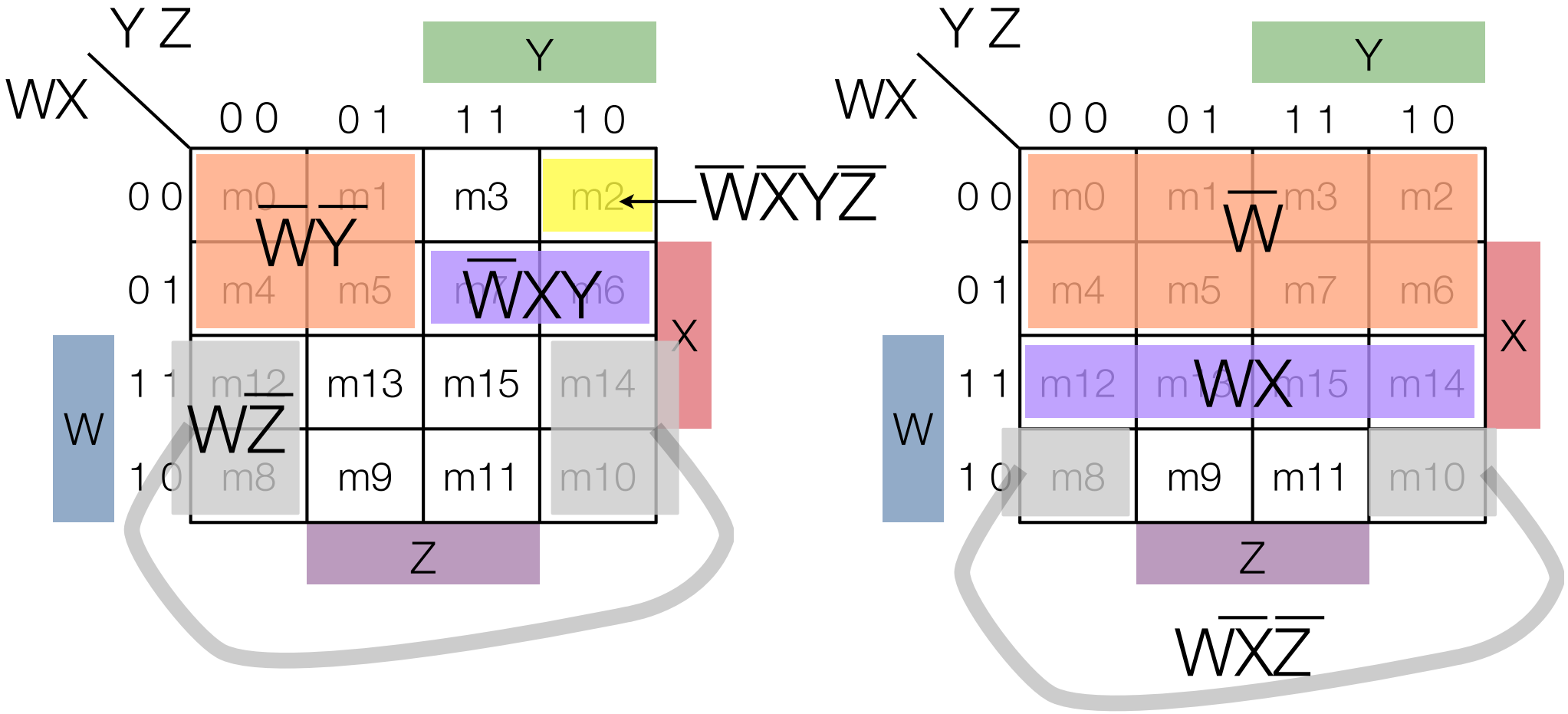

Note: bigger rectangles = fewer literals

4-variable Karnaugh maps example

W	X	Y	Z	F
0	0	0	0	1
0	0	0	1	1
0	0	1	0	1
0	0	1	1	0
0	1	0	0	1
0	1	0	1	1
0	1	1	0	1
0	1	1	1	0
1	0	0	0	1
1	0	0	1	1
1	0	1	0	1
1	0	1	1	0
1	1	0	0	1
1	1	0	1	1
1	1	1	0	0
1	1	1	1	0

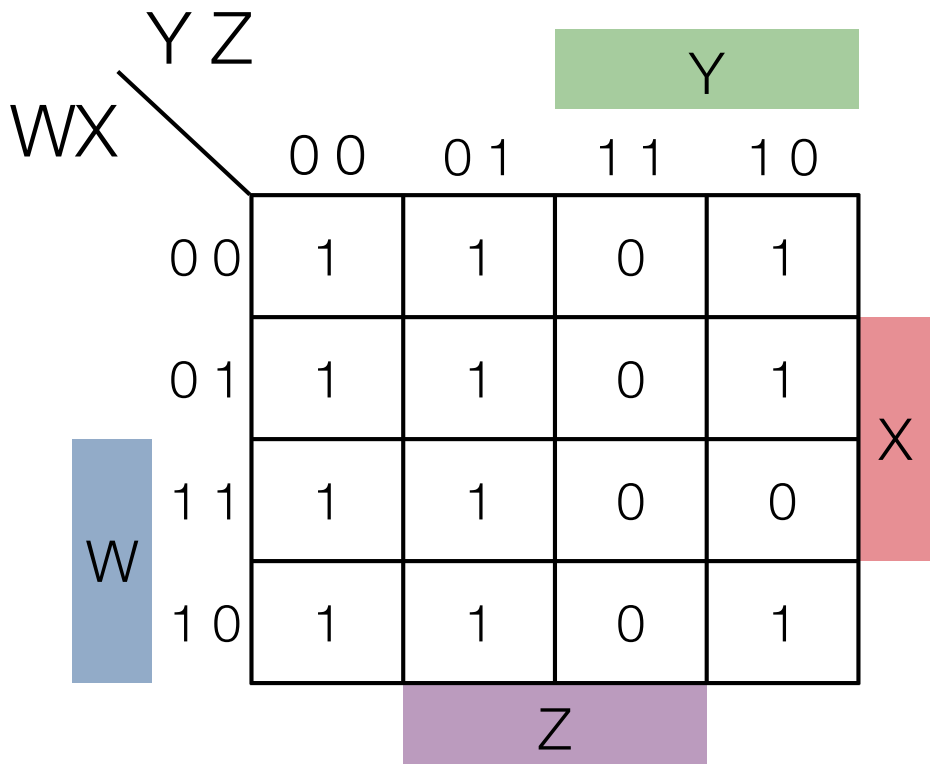

4-variable Karnaugh maps example

W	X	Y	Z	F
0	0	0	0	1
0	0	0	1	1
0	0	1	0	1
0	0	1	1	0
0	1	0	0	1
0	1	0	1	1
0	1	1	0	1
0	1	1	1	0
1	0	0	0	1
1	0	0	1	1
1	0	1	0	1
1	0	1	1	0
1	1	0	0	1
1	1	0	1	1
1	1	1	0	0
1	1	1	1	0

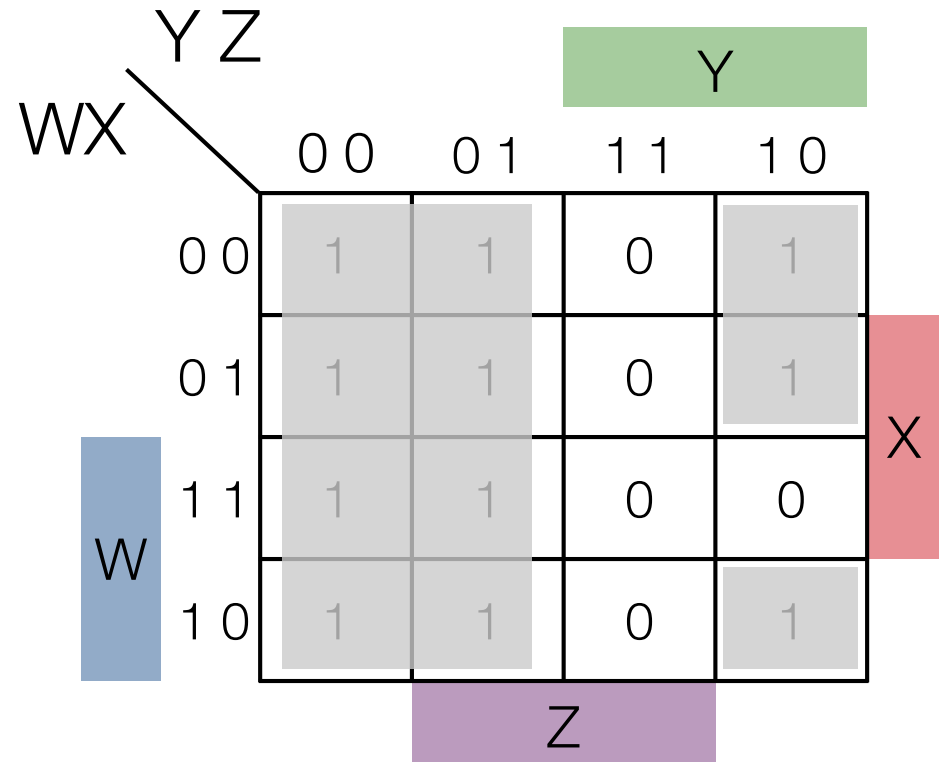

K-maps make F expressed as SoP easy to see, e.g.,

$$\overline{Y} + \overline{W}Y\overline{Z} + W\overline{X}Y\overline{Z}$$

Can the expression for F be simplified further?

4-variable Karnaugh maps example

W	X	Y	Z	F
0	0	0	0	1
0	0	0	1	1
0	0	1	0	1
0	0	1	1	0
0	1	0	0	1
0	1	0	1	1
0	1	1	0	1
0	1	1	1	0
1	0	0	0	1
1	0	0	1	1
1	0	1	0	1
1	0	1	1	0
1	1	0	0	1
1	1	0	1	1
1	1	1	0	0
1	1	1	1	0

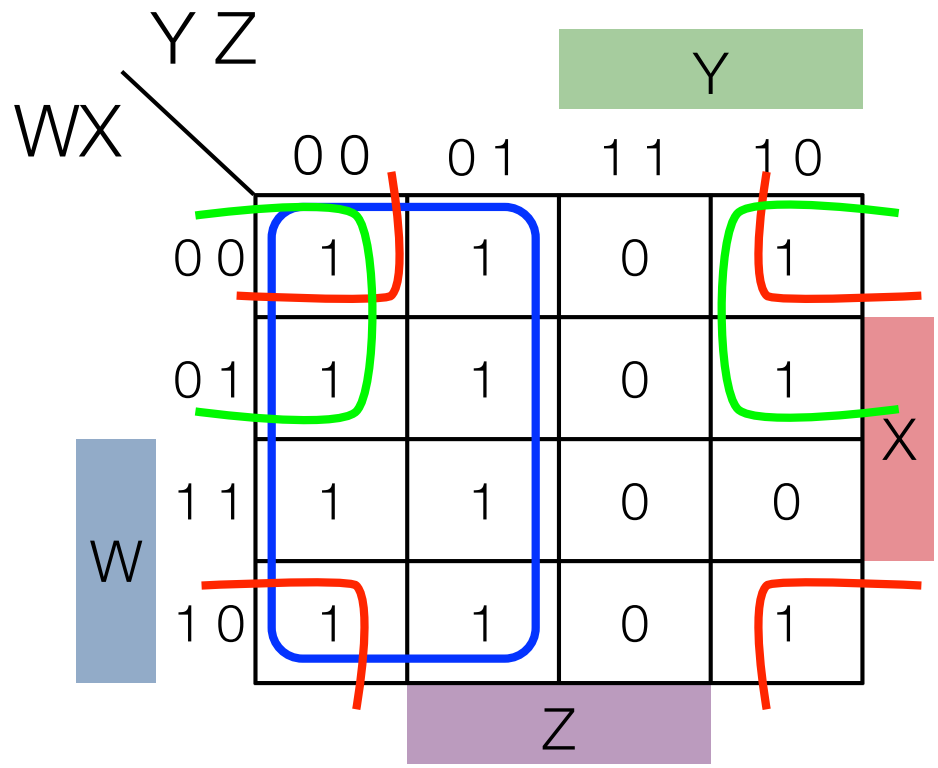

$$\overline{Y} + \overline{W}\overline{Z} + \overline{X}\overline{Z}$$

Rule when picking product terms: Must cover only 1's, but OK to overlap. Bigger rectangles are better (fewer literals)

K-Map Recap

K-map Recap

W	X	Y	Z	F
0	0	0	0	0
0	0	0	1	0
0	0	1	0	1
0	0	1	1	0
0	1	0	0	0
0	1	0	1	0
0	1	1	0	1
0	1	1	1	0
1	0	0	0	1
1	0	0	1	0
1	0	1	0	1
1	0	1	1	0
1	1	0	0	1
1	1	0	1	1
1	1	1	0	1
1	1	1	1	1

- Start with some arbitrary function (in this case, of 4 variables, F(W,X,Y,Z))
- Function is defined for all possible assignments of {0,1} to each of W,X,Y,Z

K-map Recap

W	X	Y	Z	F
0	0	0	0	0
0	0	0	1	0
0	0	1	0	1
0	0	1	1	0
0	1	0	0	0
0	1	0	1	0
0	1	1	0	1
0	1	1	1	0
1	0	0	0	1
1	0	0	1	0
1	0	1	0	1
1	0	1	1	0
1	1	0	0	1
1	1	0	1	1
1	1	1	0	1
1	1	1	1	1

- Start with some arbitrary function (in this case, of 4 variables, F(W,X,Y,Z))
- Function is defined for all possible assignments of {0,1} to each of W,X,Y,Z
- e.g., when W=0,X=1,Y=1,Z=0, then F=1 (F(0,1,1,0) = 1)

K-map Recap

W	X	Y	Z	F
0	0	0	0	0
0	0	0	1	0
0	0	1	0	1
0	0	1	1	0
0	1	0	0	0
0	1	0	1	0
0	1	1	0	1
0	1	1	1	0
1	0	0	0	1
1	0	0	1	0
1	0	1	0	1
1	0	1	1	0
1	1	0	0	1
1	1	0	1	1
1	1	1	0	1
1	1	1	1	1

- Start with some arbitrary function (in this case, of 4 variables, F(W,X,Y,Z))
- Function is defined for all possible assignments of {0,1} to each of W,X,Y,Z
- e.g., when W=0,X=1,Y=1,Z=0, then F=1(F(0,1,1,0) = 1)
- When represented as sum of minterms, will include term $\overline{W}XY\overline{Z}$
  - F = yada yada + $\overline{W}XY\overline{Z}$ will evaluate to 1 when W=0,X=1,Y=1,Z=0

K-map Recap

W	X	Y	Z	F
0	0	0	0	0
0	0	0	1	0
0	0	1	0	1
0	0	1	1	0
0	1	0	0	0
0	1	0	1	0
0	1	1	0	1
0	1	1	1	0
1	0	0	0	1
1	0	0	1	0
1	0	1	0	1
1	0	1	1	0
1	1	0	0	1
1	1	0	1	1
1	1	1	0	1
1	1	1	1	1

- Start with some arbitrary function (in this case, of 4 variables, F(W,X,Y,Z))
- Function is defined for all possible assignments of {0,1} to each of W,X,Y,Z
- e.g., when W=0,X=1,Y=1,Z=1, then F=0
- When represented as sum of minterms, F cannot include $\overline{W}XYZ$
- because yada yada + $\overline{W}XYZ$ will evaluate to 1 when W=0,X=1,Y=1,Z=1

K-map Recap

W	X	Y	Z	F
0	0	0	0	0
0	0	0	1	0
0	0	1	0	1
0	0	1	1	0
0	1	0	0	0
0	1	0	1	0
0	1	1	0	1
0	1	1	1	0
1	0	0	0	1
1	0	0	1	0
1	0	1	0	1
1	0	1	1	0
1	1	0	0	1
1	1	0	1	1
1	1	1	0	1
1	1	1	1	1

- As sum of minterms:
- $F = \bar{W}\bar{X}Y\bar{Z} + \bar{W}XY\bar{Z} + W\bar{X}\bar{Y}\bar{Z} + W\bar{X}Y\bar{Z} + WX\bar{Y}\bar{Z} + WX\bar{Y}Z + WXY\bar{Z} + WXYZ$

K-map Recap

W	X	Y	Z	F
0	0	0	0	0
0	0	0	1	0
0	0	1	0	1
0	0	1	1	0
0	1	0	0	0
0	1	0	1	0
0	1	1	0	1
0	1	1	1	0
1	0	0	0	1
1	0	0	1	0
1	0	1	0	1
1	0	1	1	0
1	1	0	0	1
1	1	0	1	1
1	1	1	0	1
1	1	1	1	1

- As sum of minterms:
- $F = \bar{W}\bar{X}Y\bar{Z} + \bar{W}XY\bar{Z} + W\bar{X}\bar{Y}\bar{Z} + W\bar{X}Y\bar{Z} + WX\bar{Y}\bar{Z} + WX\bar{Y}Z + WXY\bar{Z} + WXYZ$
- On a K-map:

WX \ YZ	00	01	11	10
00	0	0	0	1
01	0	0	0	1
11	1	1	1	1
10	1	0	0	1

Y

X

W

Z

K-map Recap

W	X	Y	Z	F
0	0	0	0	0
0	0	0	1	0
0	0	1	0	1
0	0	1	1	0
0	1	0	0	0
0	1	0	1	0
0	1	1	0	1
0	1	1	1	0
1	0	0	0	1
1	0	0	1	0
1	0	1	0	1
1	0	1	1	0
1	1	0	0	1
1	1	0	1	1
1	1	1	0	1
1	1	1	1	1

- As sum of minterms:
- $F = \bar{W}\bar{X}Y\bar{Z} + \bar{W}XY\bar{Z} + W\bar{X}\bar{Y}\bar{Z} + W\bar{X}Y\bar{Z} + WX\bar{Y}\bar{Z} + WX\bar{Y}Z + WXY\bar{Z} + WXYZ$
- On a K-map:

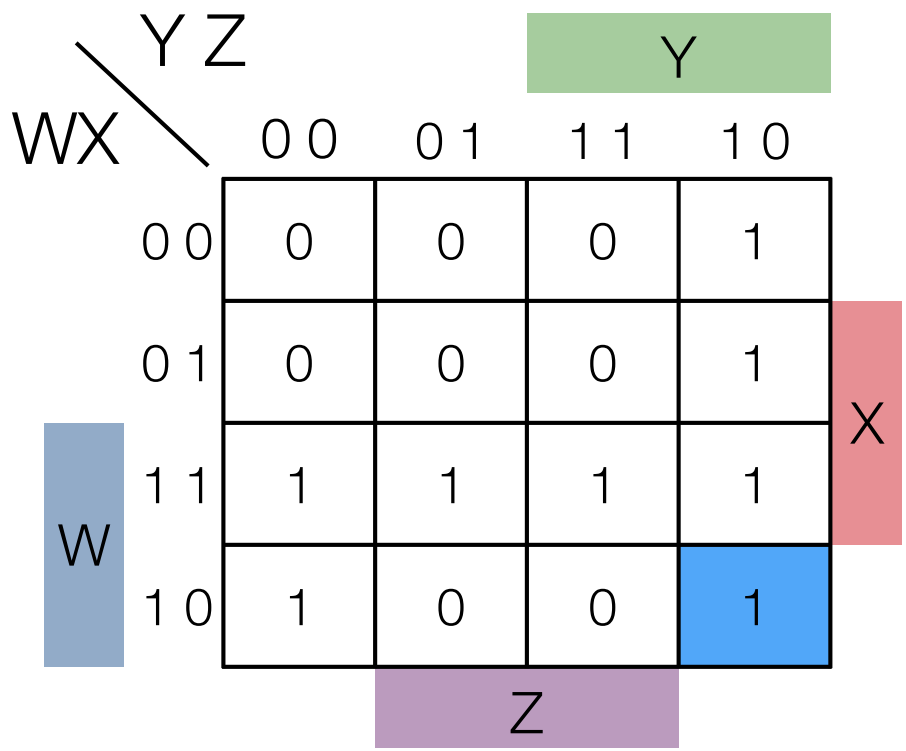

K-map Recap

W	X	Y	Z	F
0	0	0	0	0
0	0	0	1	0
0	0	1	0	1
0	0	1	1	0
0	1	0	0	0
0	1	0	1	0
0	1	1	0	1
0	1	1	1	0
1	0	0	0	1
1	0	0	1	0
1	0	1	0	1
1	0	1	1	0
1	1	0	0	1
1	1	0	1	1
1	1	1	0	1
1	1	1	1	1

- As sum of minterms:
- $F = \bar{W}\bar{X}Y\bar{Z} + \bar{W}XY\bar{Z} + W\bar{X}\bar{Y}\bar{Z} + W\bar{X}Y\bar{Z} + WX\bar{Y}\bar{Z} + WX\bar{Y}Z + WXY\bar{Z} + WXYZ$
- Find simplified SoP form without K-map: start trying to “combine” terms
  - e.g., $WXY\bar{Z} + WXYZ = WXY$
  - and $WX\bar{Y}\bar{Z} + WX\bar{Y}Z = WX\bar{Y}$
  - and $WXY + WX\bar{Y} = WX$
- So partially simplifies to:
- $F = \bar{W}\bar{X}Y\bar{Z} + \bar{W}XY\bar{Z} + W\bar{X}\bar{Y}\bar{Z} + W\bar{X}Y\bar{Z} + WX$
- keep going… (i.e., top part simplifies)

K-map Recap

W	X	Y	Z	F
0	0	0	0	0
0	0	0	1	0
0	0	1	0	1
0	0	1	1	0
0	1	0	0	0
0	1	0	1	0
0	1	1	0	1
0	1	1	1	0
1	0	0	0	1
1	0	0	1	0
1	0	1	0	1
1	0	1	1	0
1	1	0	0	1
1	1	0	1	1
1	1	1	0	1
1	1	1	1	1

- As sum of minterms:
- $F = \bar{W}\bar{X}Y\bar{Z} + \bar{W}XY\bar{Z} + W\bar{X}\bar{Y}\bar{Z} + W\bar{X}Y\bar{Z} + WX\bar{Y}\bar{Z} + WX\bar{Y}Z + WXY\bar{Z} + WXYZ$
- Partially simplified as:
- $F = \bar{W}\bar{X}Y\bar{Z} + \bar{W}XY\bar{Z} + W\bar{X}\bar{Y}\bar{Z} + W\bar{X}Y\bar{Z} + WX$
  - WX is a product term but not a minterm
  - It “replaced” the whole bottom row
  - WX “covers” 4 minterms
  - Easy to spot in the truth table… it’s the last 4 rows

K-map Recap

- Let's simplify using a K-map:
- Recall: each possible product term is a 2^i x 2^j "rectangle" (possibly wrapping around)
- 3rd K-map row means solution must include minterms:
  - $WX\bar{Y}\bar{Z} + WX\bar{Y}Z + WXY\bar{Z} + WXYZ$

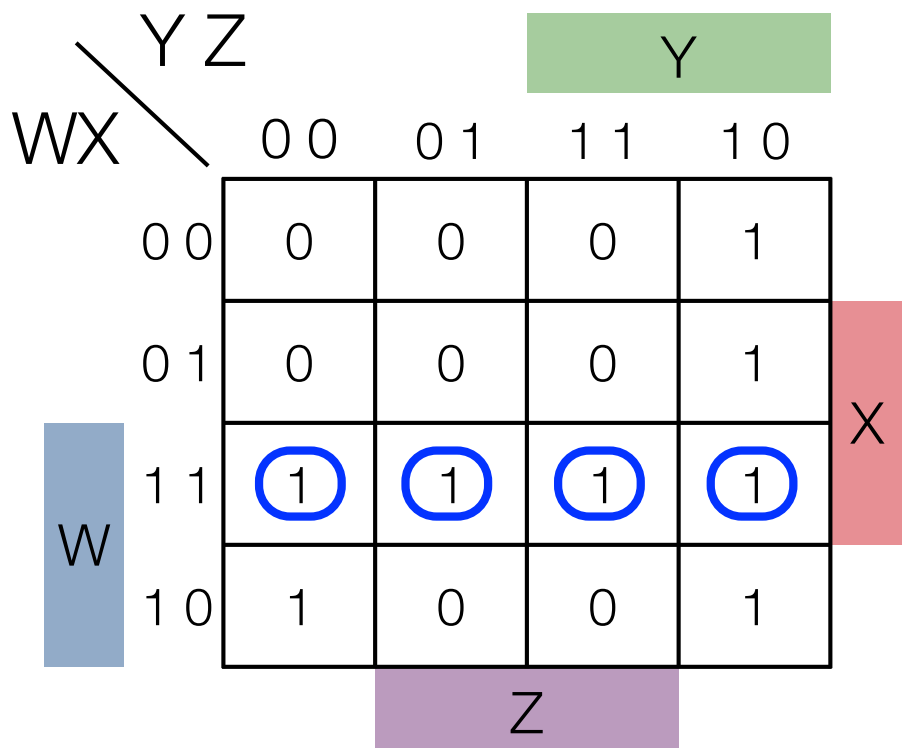

K-map Recap

- Let's simplify using a K-map:
- Recall: each possible product term is a 2^i x 2^j "rectangle" (possibly wrapping around)
- 3rd K-map row means solution must include minterms:
  - $WX\bar{Y}\bar{Z} + WX\bar{Y}Z + WXY\bar{Z} + WXYZ$
- Better: Could replace with:
  - $WX\bar{Y} + WXY$

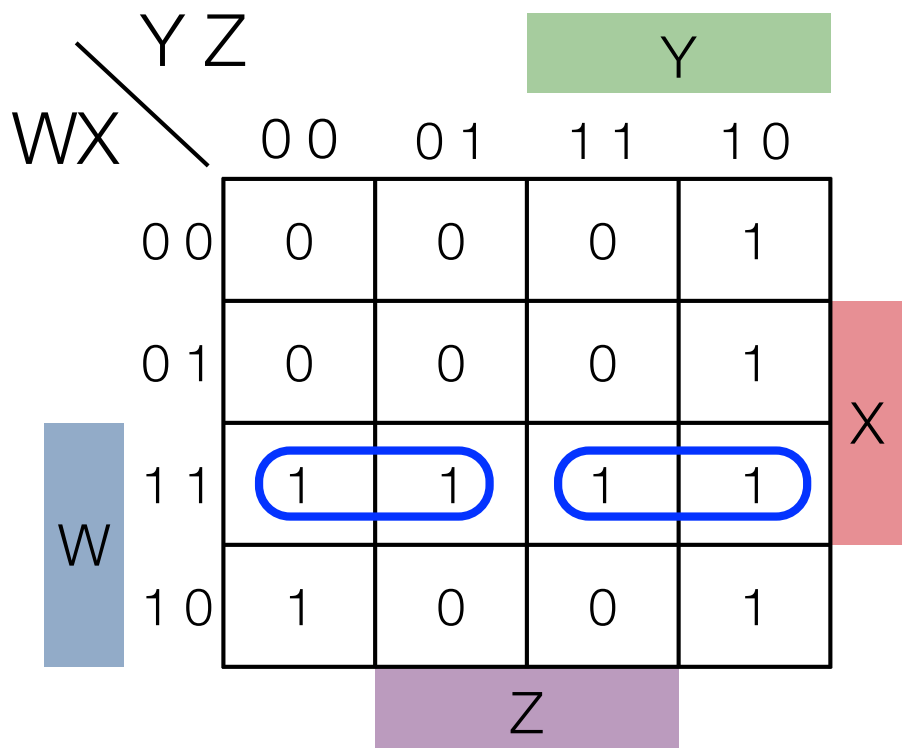

K-map Recap

- Let's simplify using a K-map:
- Recall: each possible product term is a 2^i x 2^j "rectangle" (possibly wrapping around)
- 3rd K-map row means solution must include minterms:
  - $WX\bar{Y}\bar{Z} + WX\bar{Y}Z + WXY\bar{Z} + WXYZ$

- Better: Could replace with:
  - $WX\bar{Y} + WXY$
- Even better: just WX
- WX is a prime implicant, can't replace by W or X (there are 0's)

WX \ YZ	00	01	11	10
00	0	0	0	1
01	0	0	0	1
11	1	1	1	1
10	1	0	0	1

Y

X

W

Z

K-map Recap

W	X	Y	Z	F
0	0	0	0	0
0	0	0	1	0
0	0	1	0	1
0	0	1	1	0
0	1	0	0	0
0	1	0	1	0
0	1	1	0	1
0	1	1	1	0
1	0	0	0	1
1	0	0	1	0
1	0	1	0	1
1	0	1	1	0
1	1	0	0	1
1	1	0	1	1
1	1	1	0	1
1	1	1	1	1

- $Y\bar{Z}$ is another product term we could use…
- Harder to spot on the Truth Table: rows are “spread out”

K-map Recap

- $WX + Y\bar{Z}$: overlap is good! (double-counting minterms OK)
- Still have one more 1 to cover (bottom left):
  - right now, $F = WX + Y\bar{Z}$ evaluates correctly except for W=1,X=0,Y=0,Z=0

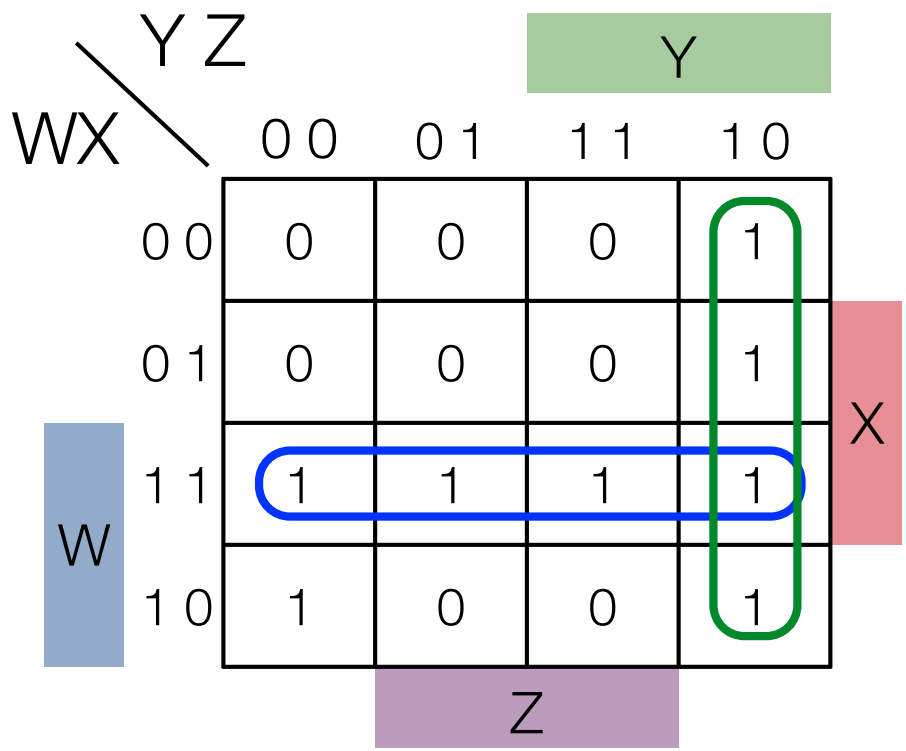

K-map Recap

- $WX + Y\bar{Z}$: overlap is good! (double-counting minterms OK)
- Still have one more 1 to cover (bottom left):
  - right now, $F = WX + Y\bar{Z}$ evaluates correctly except for W=1,X=0,Y=0,Z=0
  - Could just add minterm so $F = WX + Y\bar{Z} + W\bar{X}\bar{Y}\bar{Z}$

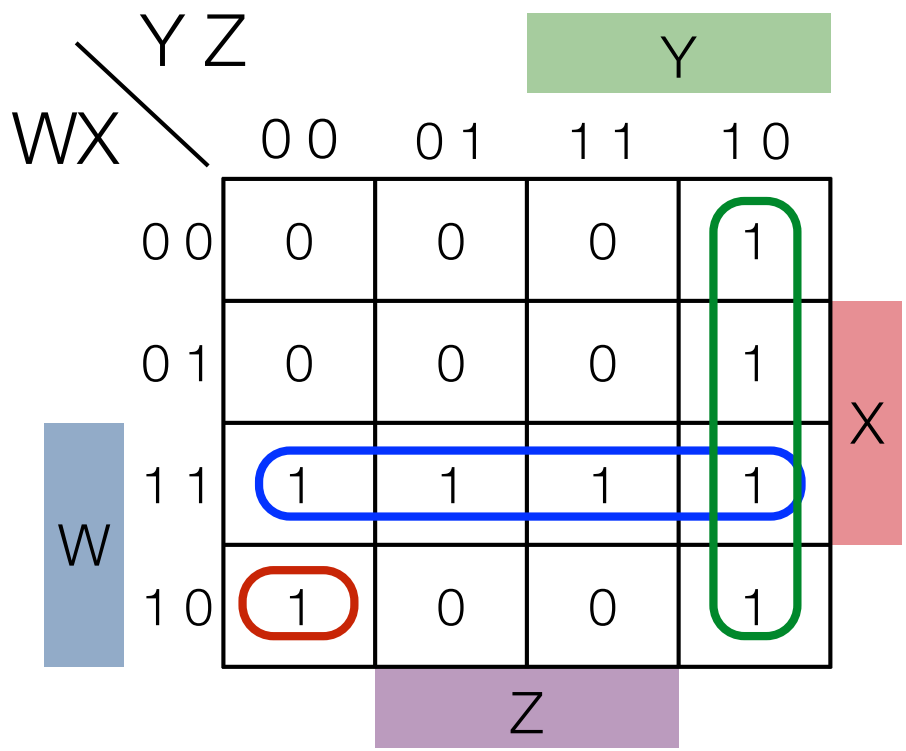

K-map Recap

- $WX + Y\bar{Z}$: overlap is good! (double-counting minterms OK)
- Still have one more 1 to cover (bottom left):
  - right now, $F = WX + Y\bar{Z}$ evaluates correctly except for W=1,X=0,Y=0,Z=0
  - Could just add minterm so $F = WX + Y\bar{Z} + W\bar{X}\bar{Y}\bar{Z}$

- Better: Use $W\bar{Y}\bar{Z}$
- so $F = WX + Y\bar{Z} + W\bar{Y}\bar{Z}$

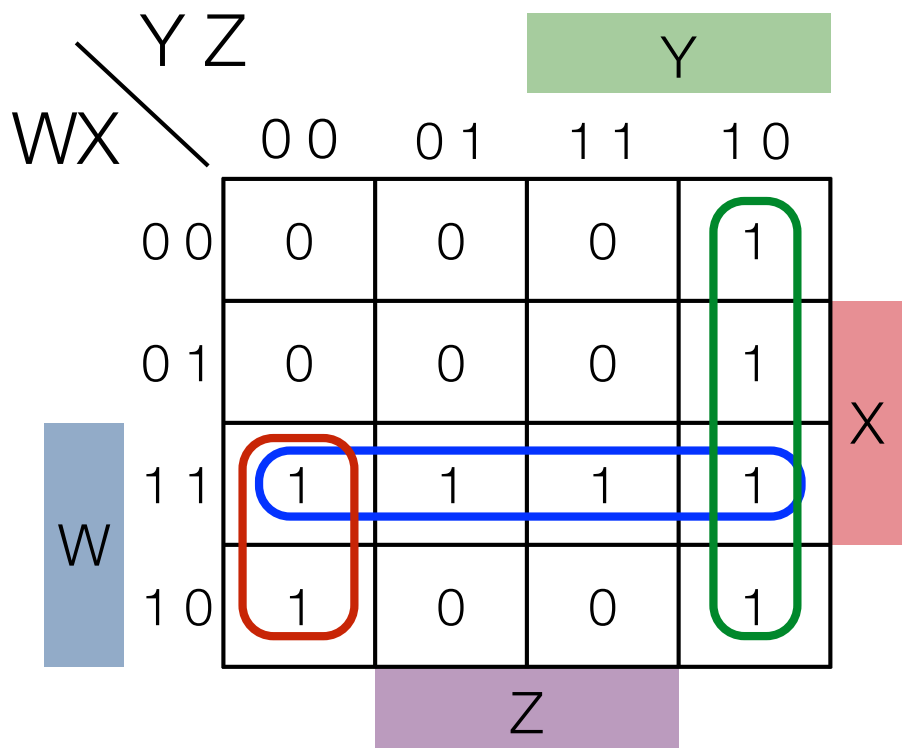

K-map Recap

- $WX + Y\bar{Z}$: overlap is good! (double-counting minterms OK)
- Still have one more 1 to cover (bottom left):
  - right now, $F = WX + Y\bar{Z}$ evaluates correctly except for W=1,X=0,Y=0,Z=0
  - Could just add minterm so $F = WX + Y\bar{Z} + W\bar{X}\bar{Y}\bar{Z}$

- Better: Use $W\bar{Y}\bar{Z}$
- so $F = WX + Y\bar{Z} + W\bar{Y}\bar{Z}$
- Best - use $W\bar{Z}$
- so $F = WX + Y\bar{Z} + W\bar{Z}$
- K-map shows us this is best (for SoP)

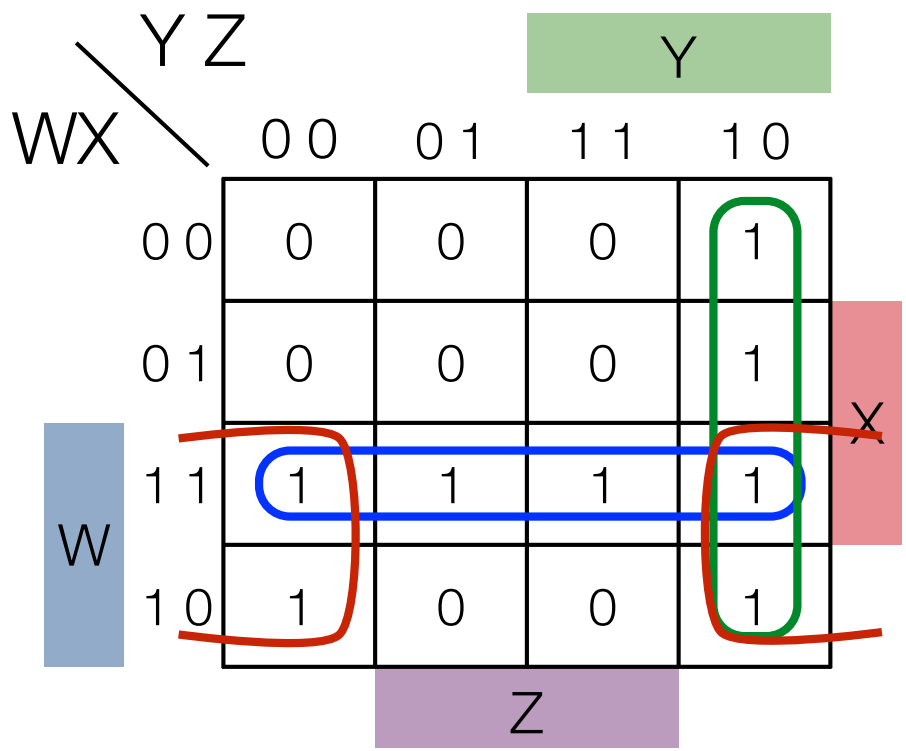

Back to our regularly scheduled programming…

Implicant terminology for a function F

- Given a function F:
  - An **implicant** is a product term (i.e., a “box” whose dimensions are powers of 2) comprised of minterms for which the function F evaluates to 1
    - i.e., the “box” must only cover squares that are 1
- **prime implicant**: An implicant not contained within another implicant (remember that implicant dimensions must be powers of 2!)
- **essential prime implicant**: a **prime implicant** that is the **only prime implicant** to cover some minterm.

4-variable Karnaugh maps (3)

- List all all of the prime implicants for this function
- Is any of them an essential prime implicant?
- What is a simplified expression for this function?

WX \ YZ	00	01	11	10
00	0	0	1	0
01	1	1	1	0
11	0	1	1	1
10	0	1	0	0

Y

X

W

Z

4-variable Karnaugh maps (3)

- List all all of the prime implicants for this function
- Is any of them an essential prime implicant?
- What is a simplified expression for this function?

These implicants are not prime (why not?)

WX \ YZ	0 0	0 1	1 1	1 0
0 0	0	0	1	0
0 1	1	1	1	0
1 1	0	1	1	1
1 0	0	1	0	0

Y

X

W

Z

4-variable Karnaugh maps (3)

- List all all of the prime implicants for this function
- Is any of them an essential prime implicant?
- What is a simplified expression for this function?

These implicants are not prime (why not?)

WX \ YZ	00	01	11	10
00	0	0	1	0
01	1	1	1	0
11	0	1	1	1
10	0	1	0	0

Y

X

W

Z

Contained inside of other (bigger) implicants

4-variable Karnaugh maps (3)

- List all of the prime implicants for this function
- Is any of them an essential prime implicant?
- What is a simplified expression for this function?

Prime implicants
(which are essential?)

WX \ YZ	00	01	11	10
00	0	0	1	0
01	1	1	1	0
11	0	1	1	1
10	0	1	0	0

Y

X

W

Z

4-variable Karnaugh maps (3)

- List all of the prime implicants for this function
- Is any of them an essential prime implicant?
- What is a simplified expression for this function?

Prime implicants (which are essential?)

WX \ YZ	0 0	0 1	1 1	1 0
0 0	0	0	1	0
0 1	1	1	1	0
1 1	0	1	1	1
1 0	0	1	0	0

Y

X

W

Z

The blue and red are essential: each has 1 minterm not covered by any other prime implicant

Green not essential: every covered minterm also covered by blue or red prime implicant

Using K-maps to build simplified circuits

- Step 1: Identify all PIs and essential PIs
- Step 2: Include all Essential PIs in the circuit (Why?)
- Step 3: If any 1-valued minterms are uncovered by EPIs, choose PIs that are "big" and do a good job covering
  - **Selection Rule:** a heuristic for usually choosing "good" PIs: choose the PIs that minimize overlap with one another and with EPIs

1	1	1	0
0	1	1	0
1	1	1	1
1	1	0	1

1	1	0	0
0	1	1	0
0	0	1	1
1	0	0	1

Using K-maps to build simplified circuits

- Step 1: Identify all PIs and essential PIs
- Step 2: Include all Essential PIs in the circuit (Why?)
- Step 3: If any 1-valued minterms are uncovered by EPIs, choose PIs that are "big" and do a good job covering
- **Selection Rule**: a heuristic for usually choosing "good" PIs: choose the PIs that minimize overlap with one another and with EPIs

Red bounds are EPIs (solo-covered minterm shown in red)

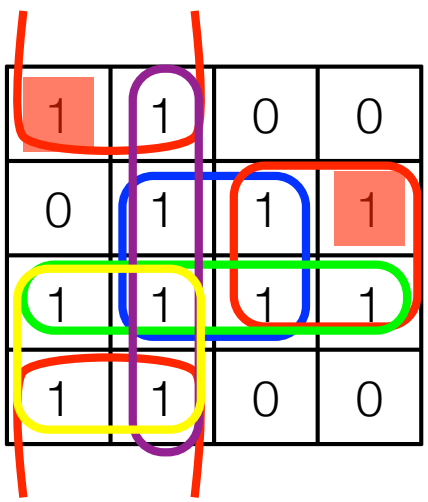

Also need (purple or blue) and (yellow or green)

No EPIs!

All blue PIs or all green PIs cover

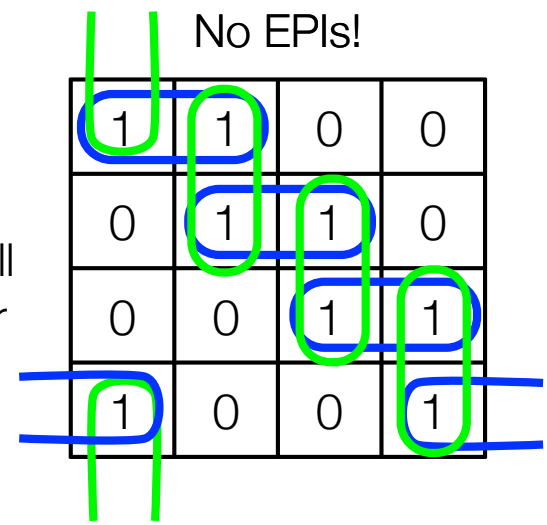

Useful(?) function example

Design example : 2-bit multiplier

a_1	a_0	b_1	b_0	z_3	z_2	z_1	z_0
0	0	0	0				
0	0	0	1				
0	0	1	0				
0	0	1	1				
0	1	0	0				
0	1	0	1				
0	1	1	0				
0	1	1	1				
1	0	0	0				
1	0	0	1				
1	0	1	0				
1	0	1	1				
1	1	0	0				
1	1	0	1				
1	1	1	0				
1	1	1	1				

two 2-bit #'s multiplied together to give a 4-bit solution

e.g., $a_1a_0 = 10$, $b_1b_0 = 11$, $z_3z_2z_1z_0 = 0110$

2 * 3 = 6

Design example : 2-bit multiplier (SOLUTION)

a1	a0	b1	b0	z3	z2	z1	z0
0	0	0	0	0	0	0	0
0	0	0	1	0	0	0	0
0	0	1	0	0	0	0	0
0	0	1	1	0	0	0	0
0	1	0	0	0	0	0	0
0	1	0	1	0	0	0	1
0	1	1	0	0	0	1	0
0	1	1	1	0	0	1	1
1	0	0	0	0	0	0	0
1	0	0	1	0	0	1	0
1	0	1	0	0	1	0	0
1	0	1	1	0	1	1	0
1	1	0	0	0	0	0	0
1	1	0	1	0	0	1	1
1	1	1	0	0	1	1	0
1	1	1	1	1	0	0	1

Design example : 2-bit multiplier (SOLUTION)

a1	a0	b1	b0	z3	z2	z1	z0
0	0	0	0	0	0	0	0
0	0	0	1	0	0	0	0
0	0	1	0	0	0	0	0
0	0	1	1	0	0	0	0
0	1	0	0	0	0	0	0
0	1	0	1	0	0	0	1
0	1	1	0	0	0	1	0
0	1	1	1	0	0	1	1
1	0	0	0	0	0	0	0
1	0	0	1	0	0	1	0
1	0	1	0	0	1	0	0
1	0	1	1	0	1	1	0
1	1	0	0	0	0	0	0
1	1	0	1	0	0	1	1
1	1	1	0	0	1	1	0
1	1	1	1	1	0	0	1

b_0

0	0	0	0
0	0	0	0
0	0	1	0
0	0	0	0

a_0, a_1, b_1

$z_3 = a_1 a_0 b_1 b_0$

b_0

0	0	0	0
0	0	0	0
0	0	0	1
0	0	1	1

a_0, a_1, b_1

$z_2 = a_1 \overline{a_0} b_1 + a_1 b_1 \overline{b_0}$

z_1 = (exercise)

b_0

0	0	0	0
0	0	1	1
0	1	0	1
0	1	1	0

a_0, a_1, b_1

$z_0 = a_0 b_0$

b_0

0	0	0	0
0	1	1	0
0	1	1	0
0	0	0	0

a_0, a_1, b_1

Design example : 2-bit multiplier (SOLUTION)

a1	a0	b1	b0	z3	z2	z1	z0
0	0	0	0	0	0	0	0
0	0	0	1	0	0	0	0
0	0	1	0	0	0	0	0
0	0	1	1	0	0	0	0
0	1	0	0	0	0	0	0
0	1	0	1	0	0	0	1
0	1	1	0	0	0	1	0
0	1	1	1	0	0	1	1
1	0	0	0	0	0	0	0
1	0	0	1	0	0	1	0
1	0	1	0	0	1	0	0
1	0	1	1	0	1	1	0
1	1	0	0	0	0	0	0
1	1	0	1	0	0	1	1
1	1	1	0	0	1	1	0
1	1	1	1	1	0	0	1

b_0

0	0	0	0
0	0	0	0
0	0	1	0
0	0	0	0

a_0, a_1, b_1

$z_3 = a_1 a_0 b_1 b_0$

b_0

0	0	0	0
0	0	0	0
0	0	0	1
0	0	1	1

a_0, a_1, b_1

$z_2 = a_1 \overline{a_0} b_1 + a_1 b_1 \overline{b_0}$

z_1 = (exercise)

b_0

0	0	0	0
0	0	1	1
0	1	0	1
0	1	1	0

a_0, a_1, b_1

$z_0 = a_0 b_0$

b_0

0	0	0	0
0	1	1	0
0	1	1	0
0	0	0	0

a_0, a_1, b_1

K-Maps: Complements, PoS, don’t care conditions

Finding $\overline{F}$

- Find prime implicants corresponding to the 0s on a k-map

WX \ YZ	00	01	11	10
00	1	1	0	1
01	1	1	0	1
11	1	1	0	0
10	1	1	0	1

WX \ YZ	00	01	11	10
00	0	0	1	0
01	0	0	1	0
11	0	0	1	1
10	0	0	1	0

$$F = \overline{Y} + \overline{X}\overline{Z} + \overline{W}\overline{Z}$$

$$\overline{F} = YZ + WXY$$

PoS expressions from a k-map

- Find $\overline{F}$ as SoP and then apply DeMorgan's

- or: Cover the boxes with all "0"s - the sum term "0's out" that box

WX \ YZ	0 0	0 1	1 1	1 0
0 0	1	1	0	1
0 1	1	0	0	0
1 1	1	0	0	0
1 0	1	1	0	1

$$\overline{F} = YZ + XZ + YX$$

DeMorgan's

$$F = (\overline{Y}+\overline{Z})(\overline{Z}+\overline{X})(\overline{Y}+\overline{X})$$

Don’t Care Conditions

Don’t care conditions

- There are circumstances in which the value of an output doesn’t matter
- For example, in that 2-bit multiplier, what we
- are told neither a nor b will be input as 0
  - “don’t care” what the output looks like for the input cases that will not occur
- Don’t care situations are denoted by an “X” in a truth table and in Karnaugh maps.
- Can also be expressed in minterm form:

$$z2 = \sum m(10,11,14)$$
$$d2 = \sum m(0,1,2,3,4,8,12)$$

a1	a0	b1	b0	z3	z2	z1	z0
0	0	0	0	X	X	X	X
0	0	0	1	X	X	X	X
0	0	1	0	X	X	X	X
0	0	1	1	X	X	X	X
0	1	0	0	X	X	X	X
0	1	0	1	0	0	0	1
0	1	1	0	0	0	1	0
0	1	1	1	0	0	1	1
1	0	0	0	X	X	X	X
1	0	0	1	0	0	1	0
1	0	1	0	0	1	0	0
1	0	1	1	0	1	1	0
1	1	0	0	X	X	X	X
1	1	0	1	0	0	1	1
1	1	1	0	0	1	1	0
1	1	1	1	1	0	0	1

Simple Don't Care Example

- Let $F = AB + \overline{A}\,\overline{B}$
- Suppose we know the input combo A=1, B=0 will never occur
- Can we replace F with a simpler function G whose output matches for all inputs we do care about?
- Let H be the function with Don't-care conditions for obsolete inputs

A	B	F
0	0	1
0	1	0
1	0	0
1	1	1

Simple Don't Care Example

- Let $F = AB + \overline{A}\,\overline{B}$
- Suppose we know the input combo A=1, B=0 will never occur
- Can we replace F with a simpler function G whose output matches for all inputs we do care about?

Inputs will not occur

A	B	F
0	0	1
0	1	0
1	0	0
1	1	1

Since A=1,B=0 will not occur, don't care what circuit produces for A=1,B=0 inputs

Simple Don't Care Example

- Let $F = AB + \overline{A}\,\overline{B}$
- Suppose we know the input combo A=1, B=0 will never occur
- Can we replace F with a simpler function G whose output matches for all inputs we do care about?
- Let H be the function with Don't-care conditions for obsolete inputs

Inputs will not occur

A	B	F	H
0	0	1	1
0	1	0	0
1	0	0	X
1	1	1	1

Simple Don't Care Example

- Let $F = AB + \overline{A}\,\overline{B}$
- Suppose we know the input combo A=1, B=0 will never occur
- Can we replace F with a simpler function G whose output matches for all inputs we do care about?
- Let H be the function with Don't-care conditions for obsolete inputs

Inputs will not occur

A	B	F	H	G
0	0	1	1	1
0	1	0	0	0
1	0	0	X	1
1	1	1	1	1

Simple Don't Care Example

- Let $F = AB + \overline{A}\,\overline{B}$
- Suppose we know the input combo A=1, B=0 will never occur
- Can we replace F with a simpler function G whose output matches for all inputs we do care about?
- Let H be the function with Don't-care conditions for obsolete inputs

Inputs will not occur

A	B	F	H	G
0	0	1	1	1
0	1	0	0	0
1	0	0	X	1
1	1	1	1	1

- Both F & G are appropriate functions for H

Simple Don't Care Example

- Let $F = AB + \overline{A}\,\overline{B}$
- Suppose we know the input combo A=1, B=0 will never occur
- Can we replace F with a simpler function G whose output matches for all inputs we do care about?
- Let H be the function with Don't-care conditions for obsolete inputs

Inputs will not occur

A	B	F	H	G
0	0	1	1	1
0	1	0	0	0
1	0	0	X	1
1	1	1	1	1

- Both F & G are appropriate functions for H

$$G = AB + \overline{B}$$

- G is (slightly) simpler than F (3 instead of 4 literals), and gets the job done!

2-bit multiplier non-0 multiplier (SOLUTION)

a1	a0	b1	b0	z3	z2	z1	z0
0	0	0	0	X	X	X	X
0	0	0	1	X	X	X	X
0	0	1	0	X	X	X	X
0	0	1	1	X	X	X	X
0	1	0	0	X	X	X	X
0	1	0	1	0	0	0	1
0	1	1	0	0	0	1	0
0	1	1	1	0	0	1	1
1	0	0	0	X	X	X	X
1	0	0	1	0	0	1	0
1	0	1	0	0	1	0	0
1	0	1	1	0	1	1	0
1	1	0	0	X	X	X	X
1	1	0	1	0	0	1	1
1	1	1	0	0	1	1	0
1	1	1	1	1	0	0	1

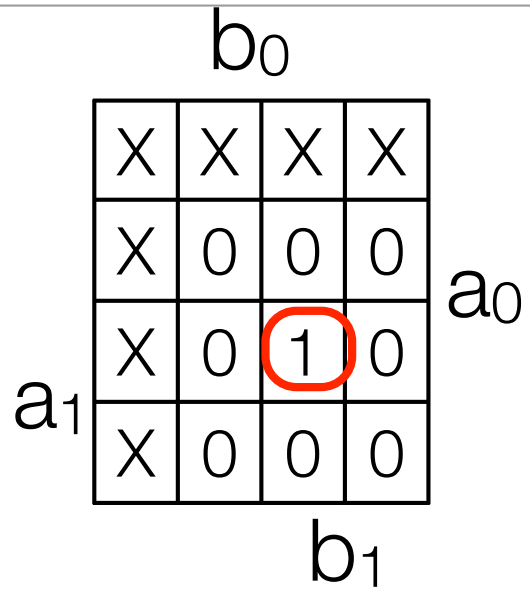

$z_3 = a_1 a_0 b_1 b_0$

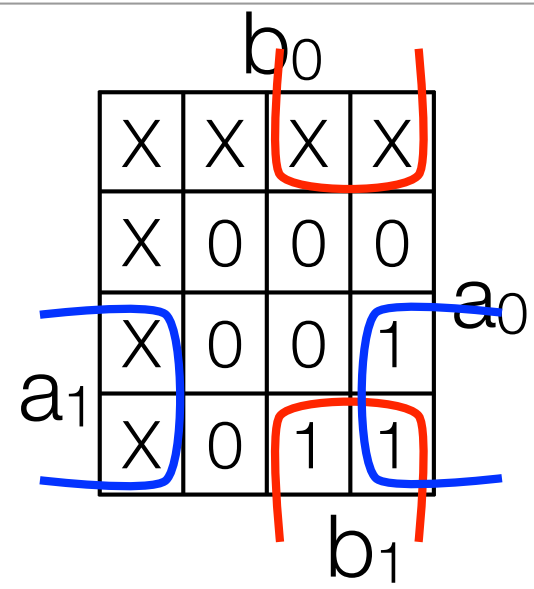

$z_2 = a_1\overline{b_0} + \overline{a_0}b_1$

(vs. $a_1\overline{a_0}b_1 + a_1 b_1\overline{b_0}$)

Revised rule for “implicant”:

1’s must be covered

0’s must not be covered

X’s are optionally covered

2-bit multiplier non-0 multiplier (SOLUTION)

a1	a0	b1	b0	z3	z2	z1	z0
0	0	0	0	X	X	X	X
0	0	0	1	X	X	X	X
0	0	1	0	X	X	X	X
0	0	1	1	X	X	X	X
0	1	0	0	X	X	X	X
0	1	0	1	0	0	0	1
0	1	1	0	0	0	1	0
0	1	1	1	0	0	1	1
1	0	0	0	X	X	X	X
1	0	0	1	0	0	1	0
1	0	1	0	0	1	0	0
1	0	1	1	0	1	1	0
1	1	0	0	X	X	X	X
1	1	0	1	0	0	1	1
1	1	1	0	0	1	1	0
1	1	1	1	1	0	0	1

Still have prime and essential prime implicants

z_1 = (exercise)

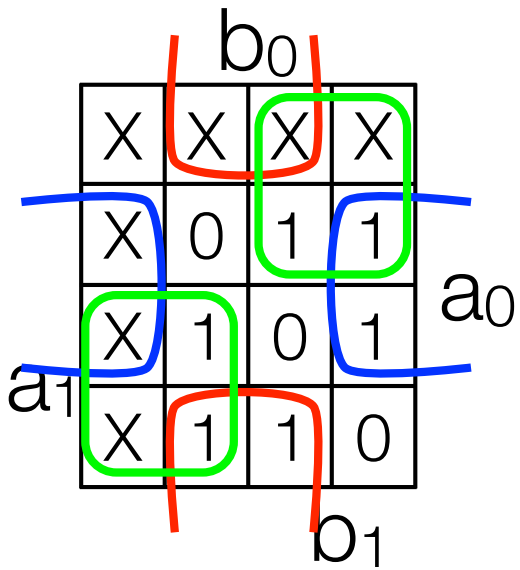

$z_0 = a_0 b_0$

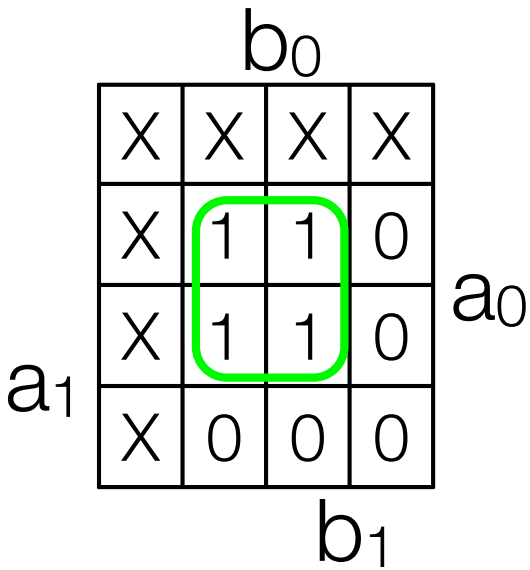

All above prime implicants are essential

Final thoughts on Don’t care conditions

- Sometimes “don’t cares” greatly simplify circuitry

		D		
	1	X	X	X
	X	1	X	X
A	0	0	1	X
	0	0	X	1
		C		

B

$$\bar{A}\bar{B}\bar{C}\bar{D} + \bar{A}B\bar{C}D + ABCD + A\bar{B}C\bar{D} \text{ vs. } \bar{A} + C$$

High-level Summary

- minterm (of k variables): a product term formed from the literals of each variable (exist without function)

$$AB\overline{C}$$

- A function (e.g., for $F = A + \overline{A}BC$) can be constructed by ORing (summing) together the minterms for which the function = 1

$$ABC+AB\overline{C}+A\overline{B}C+A\overline{B}\,\overline{C}+\overline{A}BC$$

- implicant (of a function): a product term (of literals) that is "contained" within the function (formed from minterms where the function = 1)

$$AB$$

- prime implicant: a product term which, if any literal is remove, is no longer "contained" within the function

- essential prime implicant: when a function is expressed as an OR (sum) of prime implicants, this one must be included.