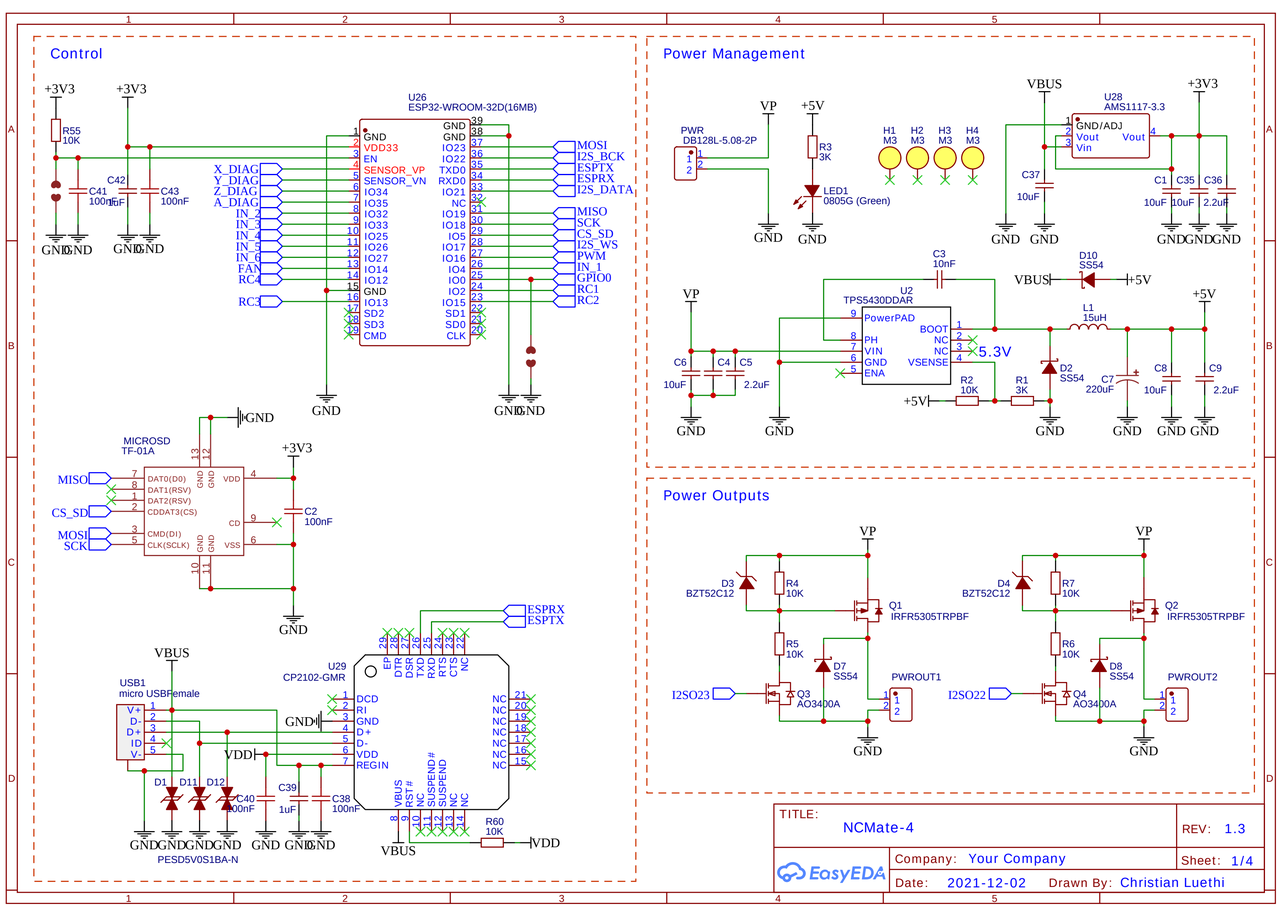
Control
U26
ESP32-WROOM-32D(16MB)
MICROSD
TF-01A
USB1
micro USBFemale
U29
CP2102-GMR
PESD5V0S1BA-N
Power Management
PWR
DB128L-5.08-2P
U28
AMS1117-3.3
U2
TPS5430DDAR
Power Outputs
PWROUT1
PWROUT2
TITLE:
NCMate-4
REV: 1.3
Company: Your Company
Sheet: 1/4
Date: 2021-12-02
Drawn By: Christian Luethi

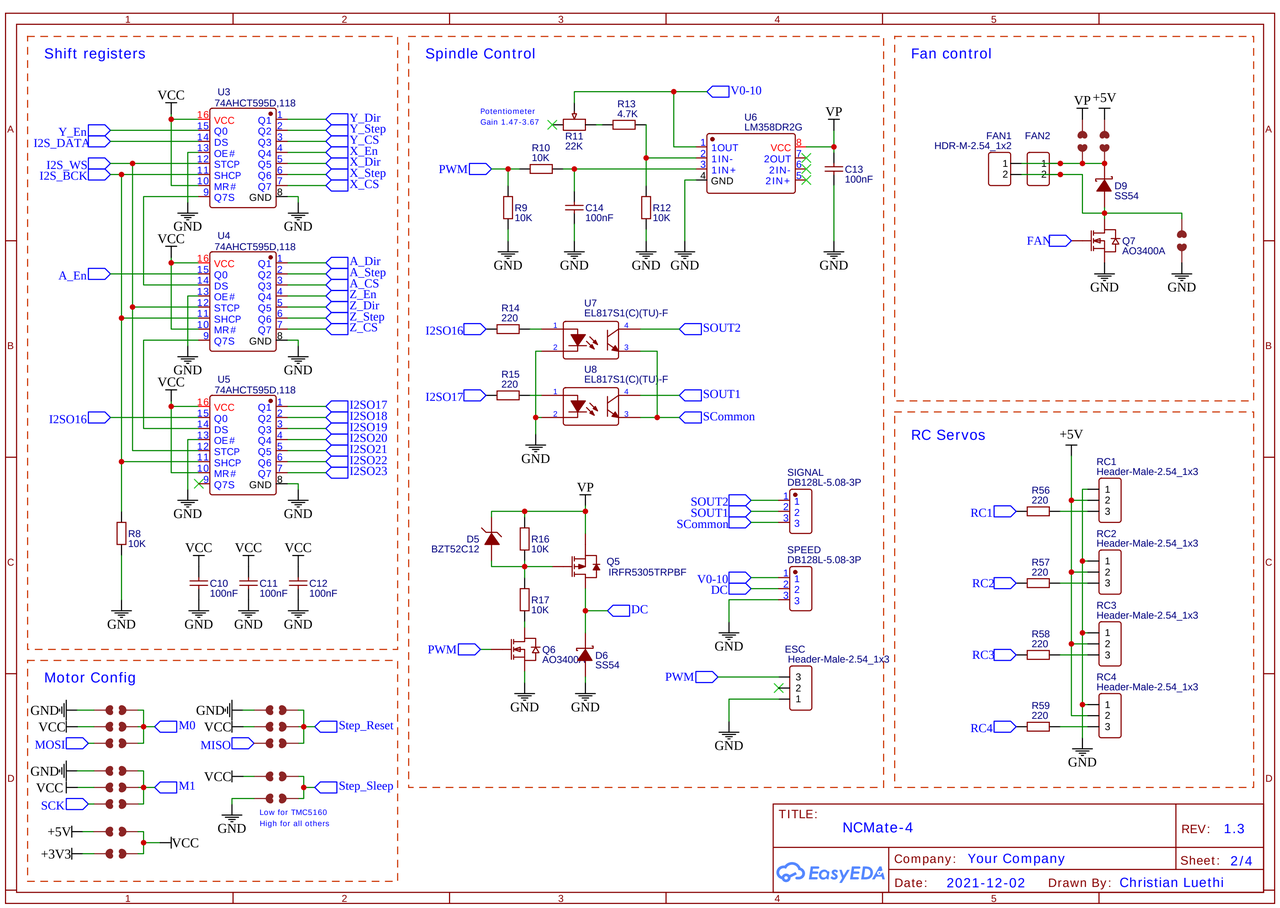
Shift registers
Motor Config
Spindle Control
Fan control
RC Servos
TITLE:
NCMate-4
REV: 1.3
Company: Your Company
Sheet: 2/4
Date: 2021-12-02
Drawn By: Christian Luethi

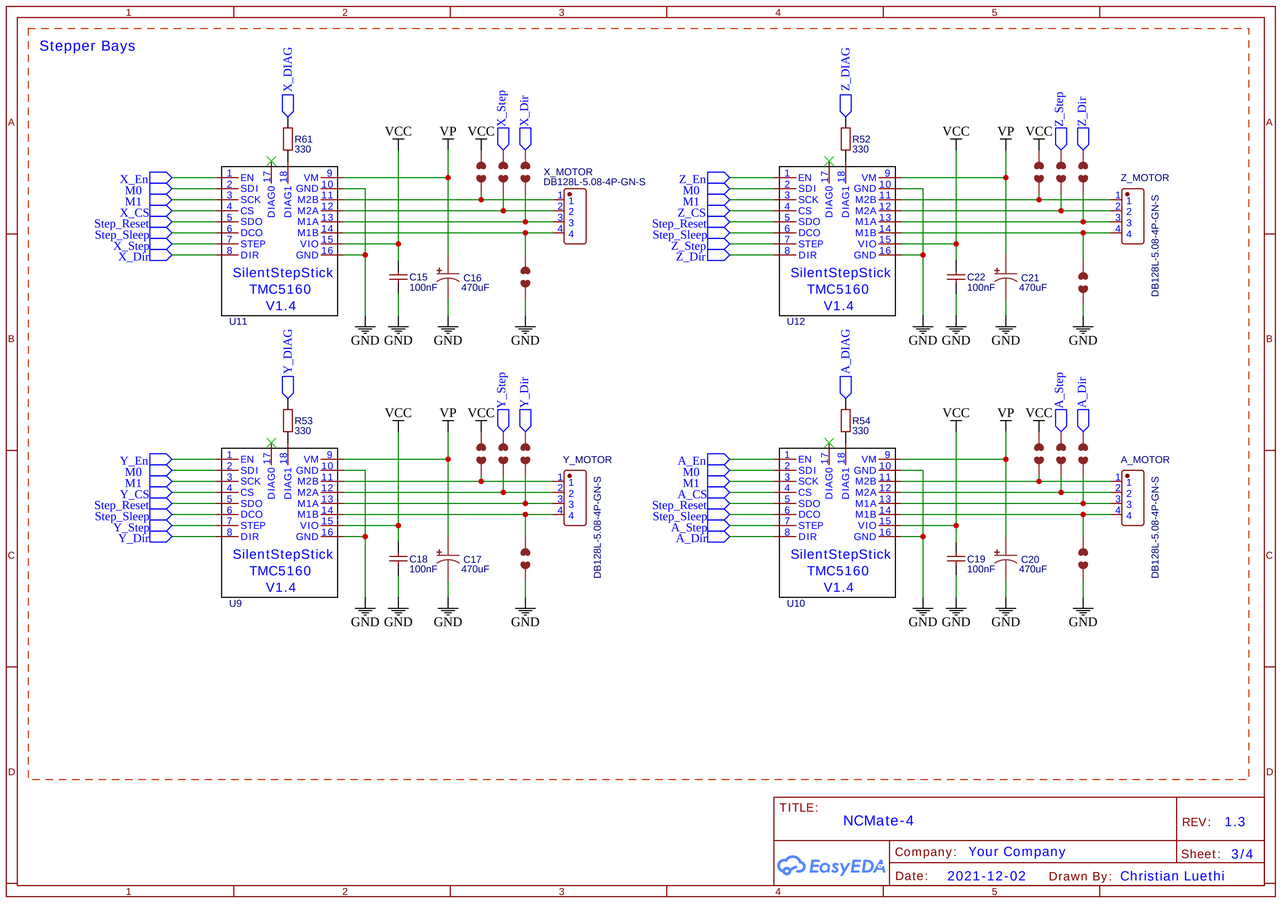
Stepper Bays
SilentStepStick
TMC5160
V1.4
TITLE:
NCMate-4
REV: 1.3
Company: Your Company
Sheet: 3/4
Date: 2021-12-02
Drawn By: Christian Luethi

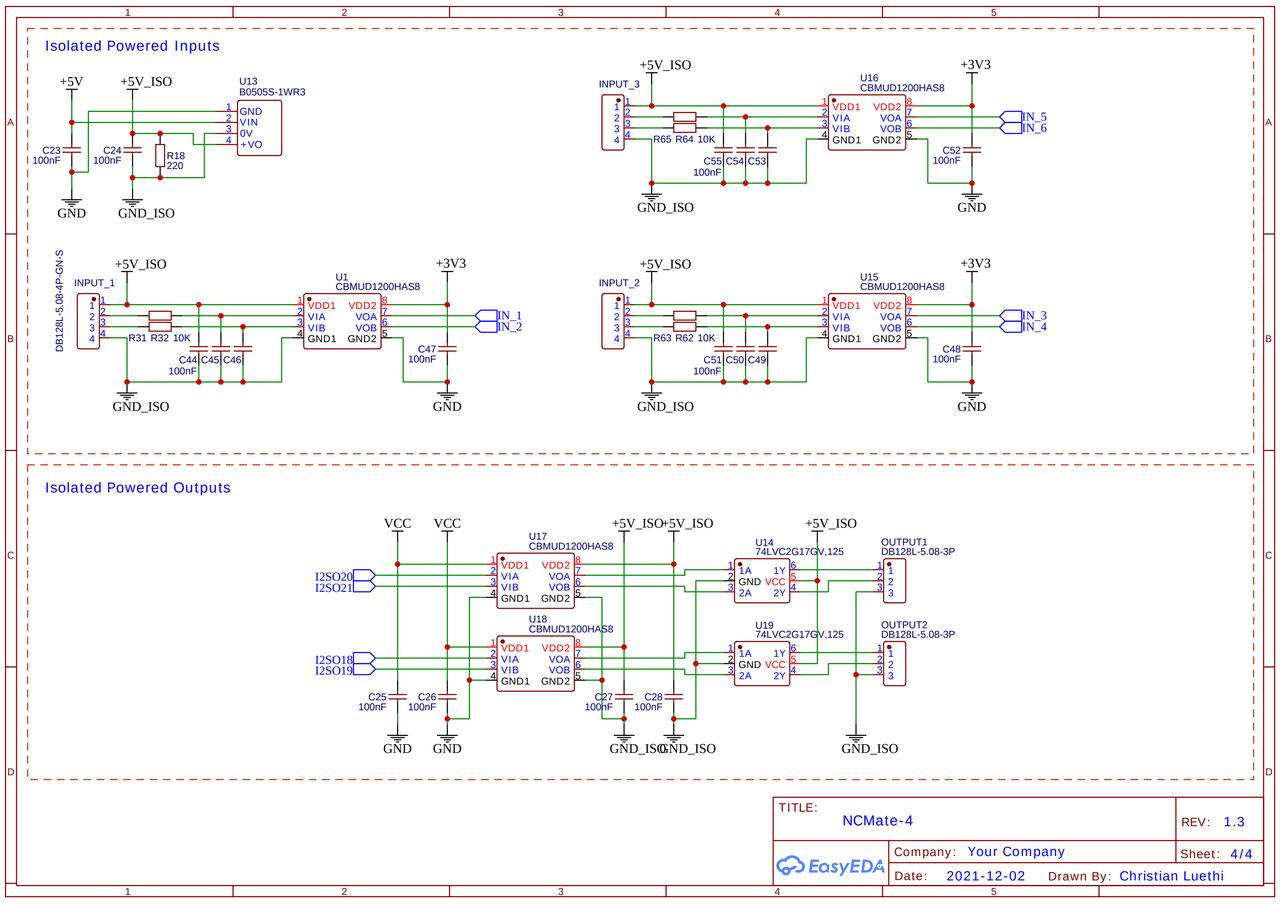
Isolated Powered Inputs
Isolated Powered Outputs
TITLE:
NCMate-4
REV: 1.3
Company: Your Company
Sheet: 4/4
Date: 2021-12-02
Drawn By: Christian Luethi