Finite Automata

Finite Automaton (FA)

- Informally, a state diagram that comprehensively captures all possible states and transitions that a machine can take while responding to a stream or sequence of input symbols

  E.g. Recognizer for “Regular Languages”

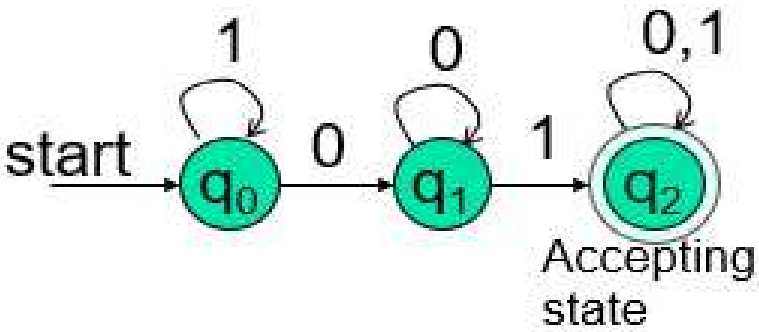

δ	0	1
$\rightarrow q_0$	q_1	q_0
q_1	q_1	q_2
$*q_2$	q_2	q_2

- Deterministic Finite Automata (DFA)
  - The machine can exist in only one state at any given time
- Non-deterministic Finite Automata (NFA)
  - The machine can exist in multiple states at the same time

Deterministic Finite Automata - Definition

- A Deterministic Finite Automaton (DFA) consists of:
  - Q ==> a finite set of states
  - $\sum$ ==> a finite set of input symbols (alphabet)
  - q_0 ==> a start state
  - F ==> set of accepting states
  - δ ==> a transition function, which is a mapping between Q x $\sum$ ==> Q
- A DFA is defined by the 5-tuple:
  - $\{Q, \sum, q_0, F, \delta\}$

What does a DFA do on reading an input string?

- <u>Input:</u> a word w in $\sum^*$
- <u>Question:</u> Is w acceptable by the DFA?
- <u>Steps:</u>
  - Start at the "start state" q_0
  - For every input symbol in the sequence w do
    - Compute the next state from the current state, given the current input symbol in w and the transition function
  - If after all symbols in w are consumed, the current state is one of the accepting states (F) then *accept w;*
  - Otherwise, *reject w.*

Regular Languages

Let L(A) be a language *recognized* by a DFA A.

Then L(A) is called a "*Regular Language*".

The Chomsky Hierachy

- A containment hierarchy of classes of formal languages

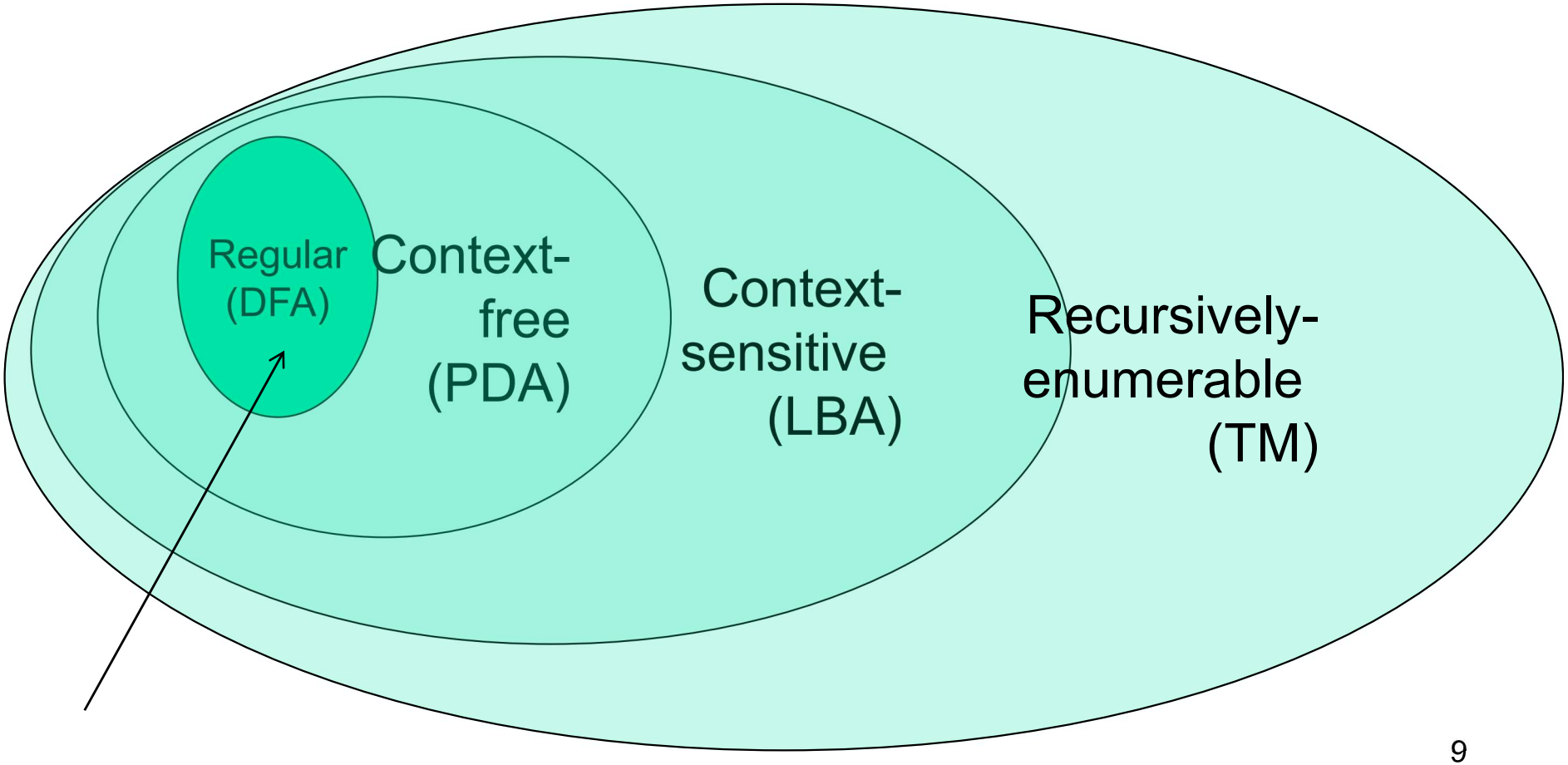

Example #1

- Build a DFA for the following language:
  - L = {w | w is a binary string that contains 01 as a substring}
- Steps for building a DFA to recognize L:
  - $\sum = \{0,1\}$
  - Decide on the states: Q
  - Designate start state and final state(s)
  - δ: Decide on the transitions:
- "Final" states == same as "accepting states"
- Other states == same as "non-accepting states"

DFA for strings containing 01

- What makes this DFA deterministic?

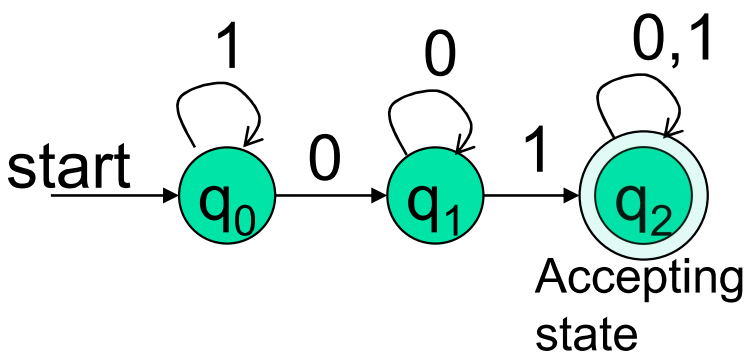

- $Q = \{q_0, q_1, q_2\}$
- $\Sigma = \{0,1\}$
- start state = q_0
- $F = \{q_2\}$
- Transition table

symbols

states

δ	0	1
q_0	q_1	q_0
q_1	q_1	q_2
$*q_2$	q_2	q_2

- What if the language allows empty strings?

Question-1

- Build a DFA for the following language:

  L = { w | w is a binary string that has even number of 1s and even number of 0s}

Extension of transitions (δ) to Paths ($\hat{\delta}$)

- $\hat{\delta}$ *(q,w)* = *destination state* from state *q* on input <u>string</u> *w*

- $\hat{\delta}$ *(q,wa)* = δ ($\hat{\delta}$*(q,w), a)*

Consider the finite automata/state machine whose transition function is given by the following transition table. Here, $Q=\{q_0, q_1, q_2, q_3\}$, $\Sigma = \{0,1\}$, $F=\{q_0\}$. Give the entire sequence of 110101

State	Input	
	0	1
→ q_0	q_2	q_1
q_1	q_3	q_0
q_2	q_0	q_3
q_3	q_1	q_2

$$
\begin{aligned}
\delta(q_0, \overset{\downarrow}{1}10101) &= \delta(q_1, \overset{\downarrow}{1}0101) \\
&= \delta(q_0, \overset{\downarrow}{0}101) \\
&= \delta(q_2, \overset{\downarrow}{1}01) \\
&= \delta(q_3, \overset{\downarrow}{0}1) \\
&= \delta(q_1, \overset{\downarrow}{1}) \\
&= q_0
\end{aligned}
$$

Hence,

$$q_0 \xrightarrow{1} q_1 \xrightarrow{1} q_0 \xrightarrow{0} q_2 \xrightarrow{1} q_3 \xrightarrow{0} q_1 \xrightarrow{1} q_0$$

Language of a DFA

A DFA A accepts string *w* if there is a path from q_0 to an accepting (or final) state that is labeled by *w*

- *i.e., L(A) = all strings that lead to an accepting state from* q_0

Non-deterministic Finite Automata (NFA)

- A Non-deterministic Finite Automaton (NFA)
  - is of course "non-deterministic"
    - Implying that the machine can exist in more than one state at the same time
    - Transitions could be non-deterministic

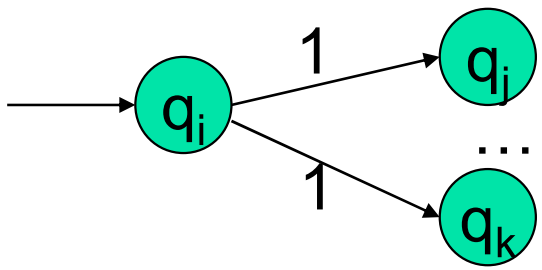

• Each transition function therefore maps to a <u>set</u> of states

Non-deterministic Finite Automata (NFA)

- A Non-deterministic Finite Automaton (NFA) consists of:
  - Q ==> a finite set of states
  - $\sum$ ==> a finite set of input symbols (alphabet)
  - q_0 ==> a start state
  - F ==> set of accepting states
  - δ ==> a transition function, which is a mapping between Q x $\sum$ ==> subset of Q
- An NFA is also defined by the 5-tuple:
  - $\{Q, \sum, q_0, F, \delta\}$

How to use an NFA?

- Input: a word w in $\sum^*$
- Question: Is w acceptable by the NFA?
- Steps:
  - Start at the "start state" q_0
  - For every input symbol in the sequence w do
    - Determine all possible next states from all current states, given the current input symbol in w and the transition function
  - If after all symbols in w are consumed and if at least one of the current states is a final state then *accept w;*
  - Otherwise, *reject w.*

NFA for strings containing 01

Why is this non-deterministic?

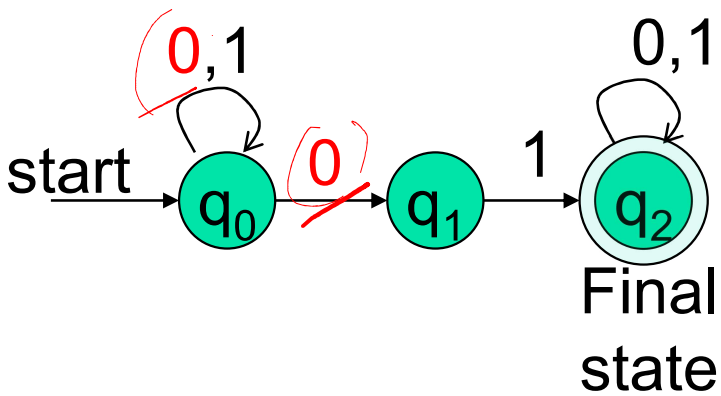

What will happen if at state q_1 an input of 0 is received?

- $Q = \{q_0, q_1, q_2\}$
- $\Sigma = \{0,1\}$
- start state = q_0
- $F = \{q_2\}$
- Transition table

symbols

δ	0	1
q_0	$\{q_0, q_1\}$	$\{q_0\}$
q_1	Φ	$\{q_2\}$
$*q_2$	$\{q_2\}$	$\{q_2\}$

states

DFA

	0	1
q_0	q_0	q_0

Question-2

- Build an NFA for the following language:

  $L = \{ w \mid w \text{ ends in } 01 \}$

- Other examples
  - Keyword recognizer (e.g., if, then, else, while, for, include, etc.)
  - Strings where the first symbol is present somewhere later on at least once

Advantages & Caveats for NFA

- Great for modeling regular expressions words
  - String processing - e.g., grep, lexical analyzer

- Could a non-deterministic state machine be implemented in practice?
  - Yes but in a limited way
  - Probabilistic models could be viewed as extensions of non-deterministic state machines
    (e.g., toss of a coin, a roll of dice)
    - They are not the same though
  - A parallel computer could exist in multiple “states” at the same time

NFA to a DFA

But, DFAs and NFAs are equivalent in their power to capture langauges !!

Differences: DFA vs. NFA

- **DFA**

1. All transitions are deterministic
   - Each transition leads to exactly one state
2. Accepts input if the last state visited is in F
3. Sometimes harder to construct because of the number of states
4. Practical implementation is feasible

- **NFA**

1. Some transitions could be non-deterministic
   - A transition could lead to a subset of states
2. Accepts input if *one of* the last states is in F
3. Generally easier than a DFA to construct
4. Practical implementations limited but emerging (e.g., Micron automata processor)

① Construct a DFA accepting all strings over {a,b} ending with ab

② Construct a NFA accepting all strings over {a, b} ending with ab.

NFA

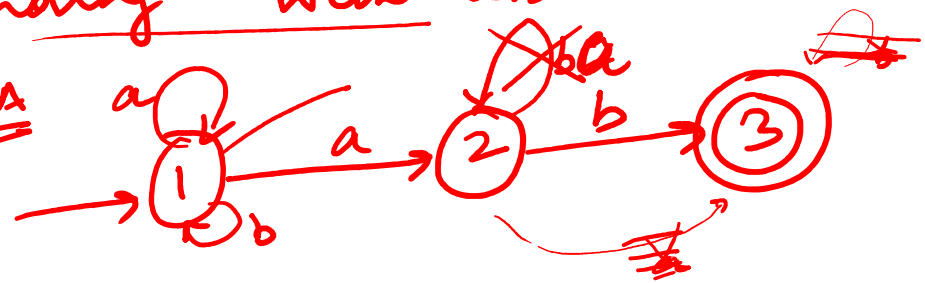

ab
aab
bab
bbab
aaab
abab

aab

aaaaab

aab

	a	b
1	1, 2	1
2	2	3
3	ϕ	ϕ

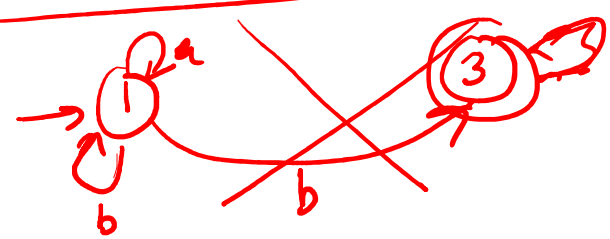

Equivalence of DFA & NFA

- Theorem:
  - A language L is accepted by a DFA *if and only if* it is accepted by an NFA.

Should be true for any L

- Proof:

1. If part:

   NFA → DFA

   - Prove by showing every NFA can be converted to an equivalent DFA (in the next few slides…)

2. Only-if part is trivial:
   - Every DFA is a special case of an NFA where each state has exactly one transition for every input symbol. Therefore, if L is accepted by a DFA, it is accepted by a corresponding NFA. □

Proof for the if-part

- If-part: A language L is accepted by a DFA if it is accepted by an NFA
- rephrasing…

NFA → DFA

- Given any NFA N, we can construct a DFA D such that L(N)=L(D)

- How to convert an NFA into a DFA?
  - Observation: In an NFA, each transition maps to a *subset* of states
  - Idea: Represent:

    each "subset of NFA_states" ➔ a single "DFA_state"

Subset construction

NFA to DFA by subset construction

- Let $N = \{Q_N, \Sigma, \delta_N, q_0, F_N\}$
- <u>Goal:</u> Build $D=\{Q_D, \Sigma, \delta_D, \{q_0\}, F_D\}$ s.t. $L(D)=L(N)$
- <u>Construction:</u>
  1. Q_D= all subsets of Q_N (i.e., power set)
  2. F_D=set of subsets S of Q_N s.t. $S \cap F_N \neq \Phi$
  3. δ_D: for each subset S of Q_N and for each input symbol a in Σ:
     - $\delta_D(S,a) = \bigcup_{p \text{ in } s} \delta_N(p,a)$

Idea: To avoid enumerating all of power set, do "lazy creation of states"

NFA to DFA construction: Example

- *L = {w | w ends in 01}*

NFA:

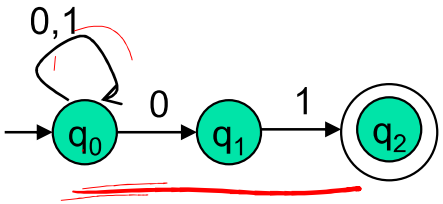

δ_N	0	1
q_0	$\{q_0,q_1\}$	$\{q_0\}$
q_1	Ø	$\{q_2\}$
$*q_2$	Ø	Ø

NFA → DFA

states = 3
set of inputs = 0, 1

DFA:

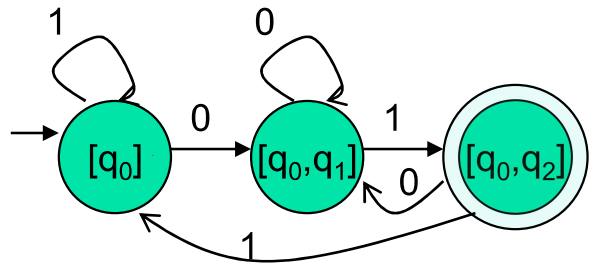

δ_D
~~Ø~~
$[q_0]$
~~$[q_1]$~~
~~$*[q_2]$~~
$[q_0,q_1]$
$*[q_0,q_2]$
~~$*[q_1,q_2]$~~
~~$*[q_0,q_1,q_2]$~~

δ_D	0	1
$[q_0]$	$[q_0,q_1]$	$[q_0]$
$[q_0,q_1]$	$[q_0,q_1]$	$[q_0,q_2]$
$*[q_0,q_2]$	$[q_0,q_1]$	$[q_0]$

0. Enumerate all possible subsets
1. Determine transitions
2. Retain only those states reachable from $\{q_0\}$

NFA to DFA: Repeating the example using *LAZY CREATION*

- *L = {w | w ends in 01}*

NFA:

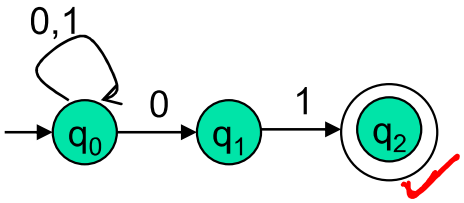

δ_N	0	1
q_0	$\{q_0,q_1\}$	$\{q_0\}$
q_1	Ø	$\{q_2\}$
$*q_2$	Ø	Ø

DFA:

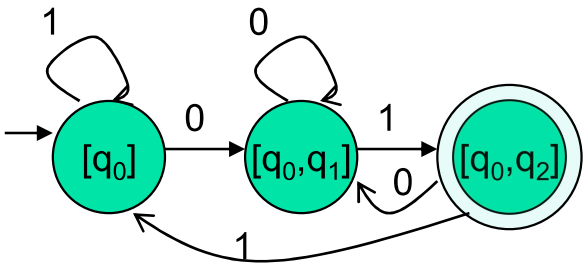

δ_D	0	1
$[q_0]$	$[q_0,q_1]$	$[q_0]$

Final

Main Idea:

Introduce states as you go (on a need basis)

Question-3

Construct a deterministic automaton equivalent to

$$M = (\{q_0, q_1\}, \{0, 1\}, \delta, q_0, \{q_0\})$$

where δ is defined by its state table (see Table 3.2).

TABLE 3.2 State Table for Example 3.6

State/Σ	0	1
$\rightarrow q_0$	q_0	q_1
q_1	q_1	q_0, q_1

NFA ≈ DFA

	0	1
$\rightarrow q_0$	q_0	q_1
q_1	q_1	q_0, q_1

	0	1
$q_0 q_1$	$(q_0 q_1)$	$(q_0 q_1)$

State/Σ	0	1
$\emptyset$	$\emptyset$	$\emptyset$
$[q_0]$	$[q_0]$	$[q_1]$
$[q_1]$	$[q_1]$	$[q_0, q_1]$
$[q_0, q_1]$	$[q_0, q_1]$	$[q_0, q_1]$

DFA

Question-4

Find a deterministic acceptor equivalent to

$$M = (\{q_0, q_1, q_2\}, \{a, b\}, \delta, q_0, \{q_2\})$$

where δ is as given by Table 3.4.

	a	b
$\rightarrow q_0$	$(q_0 q_1)$	q_2
$q_0 q_1$	$(q_0 q_1)$	$(q_1 q_2)$
q_2	ϕ	$(q_0 q_1)$
$q_1 q_2$	q_0	$(q_0 q_1)$

TABLE 3.4 State Table for Example 3.7

State/Σ	a	b
$\rightarrow q_0$	q_0, q_1	q_2
q_1	q_0	q_1
q_2	ϕ	q_0, q_1

NFA

↳ DFA

State/Σ	a	b
$[q_0]$	$[q_0, q_1]$	$[q_2]$
$[q_2]$	$\emptyset$	$[q_0, q_1]$
$[q_0, q_1]$	$[q_0, q_1]$	$[q_1, q_2]$
$[q_1, q_2]$	$[q_0]$	$[q_0, q_1]$

DFA

Applications

- Text indexing
  - inverted indexing
  - For each unique word in the database, store all locations that contain it using an NFA or a DFA
- Find pattern P in text T
  - Example: Google querying
- Extensions of this idea:
  - PATRICIA tree, suffix tree

A few subtle properties of DFAs and NFAs

- The machine never really terminates.
  - It is always waiting for the next input symbol or making transitions.
- The machine decides when to consume the next symbol from the input and when to ignore it.
  - (but the machine can never skip a symbol)
- => A transition can happen even *without* really consuming an input symbol (think of consuming ε as a free token) – if this happens, then it becomes an ε-NFA (see next few slides).
- A single transition *cannot* consume more than one (non-ε) symbol.

epsilon - NFA

FA with ε-Transitions

- We can allow <u>explicit</u> ε-transitions in finite automata
  - i.e., a transition from one state to another state without consuming any additional input symbol
  - Explicit ε-transitions between different states introduce non-determinism.
  - Makes it easier sometimes to construct NFAs

<u>Definition:</u> ε -NFAs are those NFAs with at least one explicit ε-transition defined.

	0	1	ε

- ε -NFAs have one more column in their transition table

Example of an ε-NFA

L = {w | w is empty, or if non-empty will end in 01}

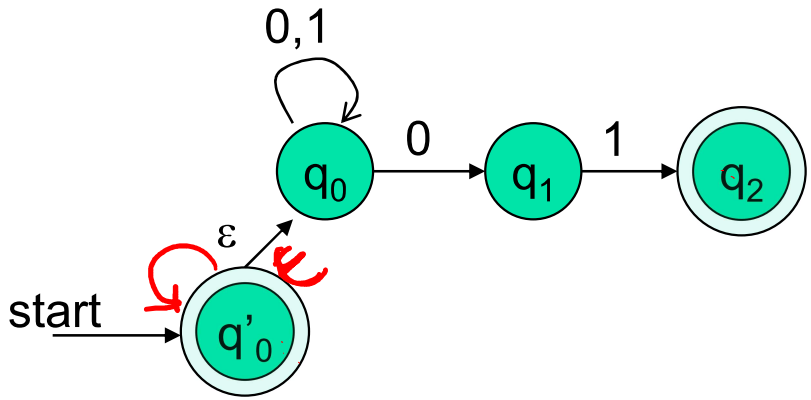

δ_E	0	1	ε
$*q'_0$	Ø	Ø	$\{q'_0, q_0\}$
q_0	$\{q_0, q_1\}$	$\{q_0\}$	$\{q_0\}$
q_1	Ø	$\{q_2\}$	$\{q_1\}$
$*q_2$	Ø	Ø	$\{q_2\}$

ECLOSE(q'_0)
ECLOSE(q_0)
ECLOSE(q_1)
ECLOSE(q_2)

- ε-closure of a state q, ***ECLOSE(q)***, is the set of all states (including itself) that can be *reached* from q by repeatedly making an arbitrary number of ε-transitions.

$\epsilon\text{closure}(q'_0) = \{q'_0, q_0\}$

To simulate any transition:

Step 1) Go to all immediate destination states.

Step 2) From there go to all their ε-closure states as well.

Example of an ε-NFA

L = {w | w is empty, or if non-empty will end in 01}

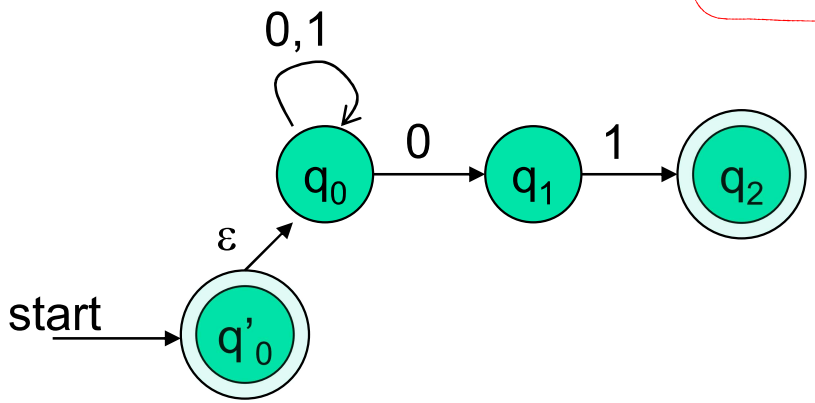

δ_E	0	1	ε
→ $*q'_0$	Ø	Ø	$\{q'_0, q_0\}$
q_0	$\{q_0, q_1\}$	$\{q_0\}$	$\{q_0\}$
q_1	Ø	$\{q_2\}$	$\{q_1\}$
$*q_2$	Ø	Ø	$\{q_2\}$

ECLOSE(q'_0)

ECLOSE(q_0)

Simulate for w=101:

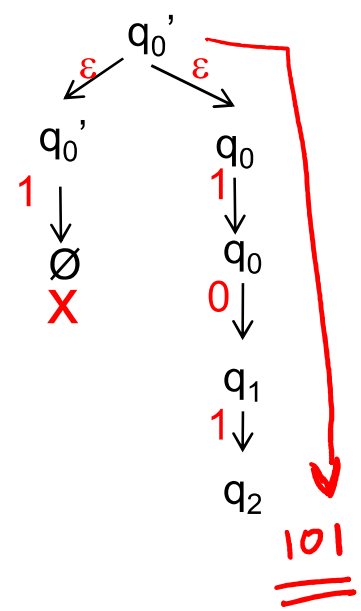

To simulate any transition:

Step 1) Go to all immediate destination states.

Step 2) From there go to all their ε-closure states as well.

Example of another ε-NFA

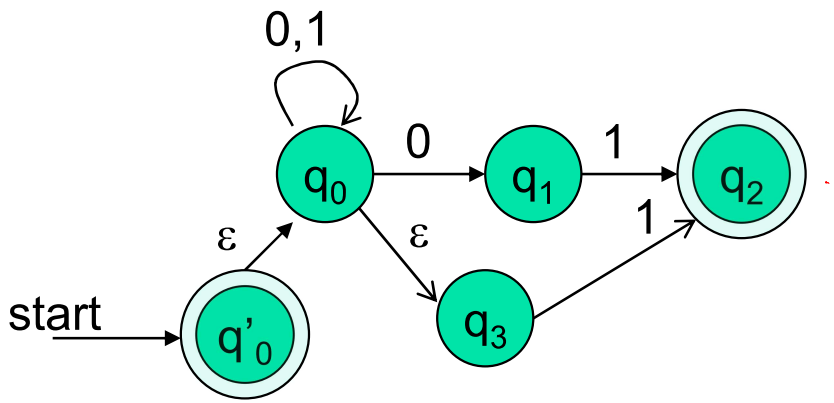

δ_E	0	1	ε
→ $*q'_0$	Ø	Ø	$\{q'_0,q_0,q_3\}$
q_0	$\{q_0,q_1\}$	$\{q_0\}$	$\{q_0,q_3\}$
q_1	Ø	$\{q_2\}$	$\{q_1\}$
$*q_2$	Ø	Ø	$\{q_2\}$
q_3	Ø	$\{q_2\}$	$\{q_3\}$

Simulate for w=101:

?

$\omega = 1$

$\omega = 11$

$q'_0 \xrightarrow{\epsilon} q_0 \xrightarrow{1} q_0 \xrightarrow{0} q_1 \xrightarrow{1} q_2$

q'_0

$\omega = 1$

$q'_0 \rightarrow q_0 \rightarrow q_3 \rightarrow q_2$

lazy creation
subset const.

Equivalency of DFA, NFA, ε-NFA

- Theorem: A language L is accepted by some ε-NFA if and only if L is accepted by some DFA

- Implication:
  - DFA ≡ NFA ≡ ε-NFA
  - (all accept Regular Languages)

DFA
NFA
ε NFA
Regular language.

Eliminating ε-transitions

Let $E = \{Q_E, \Sigma, \delta_E, q_0, F_E\}$ be an ε-NFA

<u>Goal:</u> To build DFA $D=\{Q_D, \Sigma, \delta_D, \{q_D\}, F_D\}$ s.t. $L(D)=L(E)$

<u>Construction:</u>

1. Q_D= all reachable subsets of Q_E factoring in ε-closures
2. q_D = ECLOSE(q_0)
3. F_D=subsets S in Q_D s.t. $S \cap F_E \neq \Phi$
4. δ_D: for each subset S of Q_E and for each input symbol $a \in \Sigma$:
   - Let $R = \bigcup_{p \text{ in } s} \delta_E(p,a)$ // go to destination states
   - $\delta_D(S,a) = \bigcup_{r \text{ in } R} \text{ECLOSE}(r)$ // from there, take a union of all their ε-closures

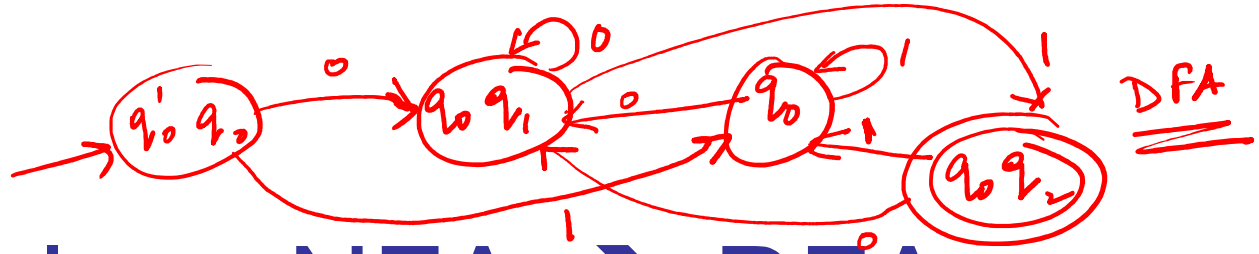

Example: ε-NFA ➔ DFA

L = {w | w is empty, or if non-empty will end in 01}

ε NFA

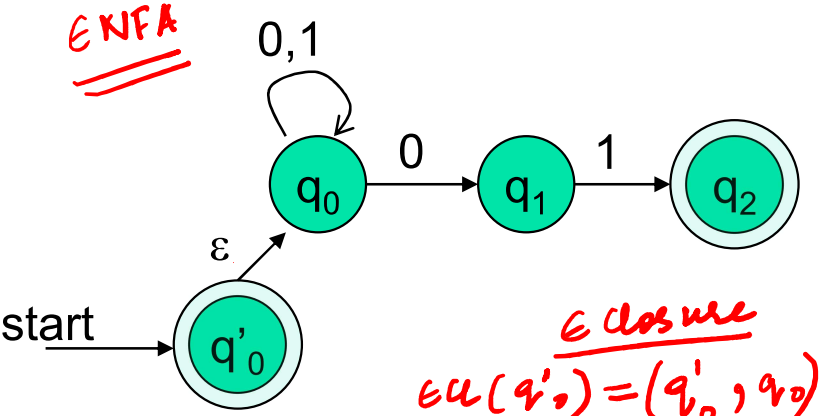

ε closure

$\varepsilon cl(q'_0) = (q'_0, q_0)$

$\Sigma = 0, 1, \varepsilon$

δ_E	0	1	ε
→ *q'_0	Ø	Ø	$\{q'_0, q_0\}$
q_0	$\{q_0, q_1\}$	$\{q_0\}$	$\{q_0\}$
q_1	Ø	$\{q_2\}$	$\{q_1\}$
*q_2	Ø	Ø	$\{q_2\}$

δ_D	0	1
→ *$\{q'_0, q_0\}$	$\{q_0 q_1\}$	q_0
✓ $\{q_0 q_1\}$	$\{q_0 q_1\}$	$\{q_0, q_2\}$
✓ $\{q_0\}$	$\{q_0 q_1\}$	$\{q_0\}$
* $\{q_0 q_2\}$	$q_0 q_1$	q_0

Example: ε-NFA ➔ DFA

L = {w | w is empty, or if non-empty will end in 01}

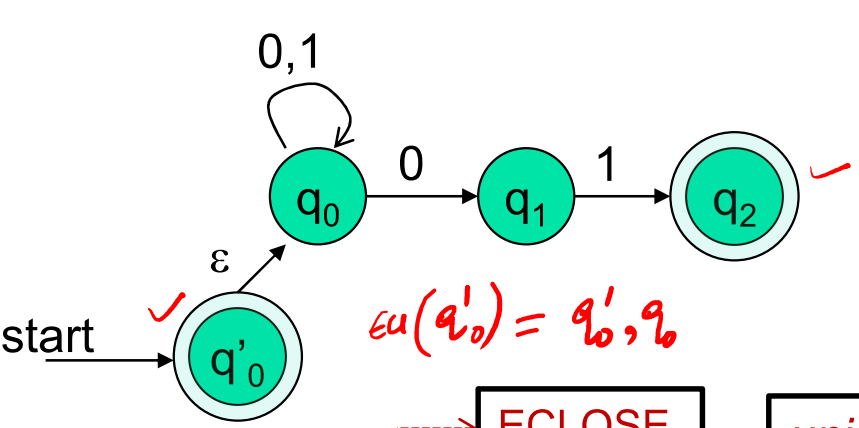

$\varepsilon u(q'_0) = q'_0, q_0$

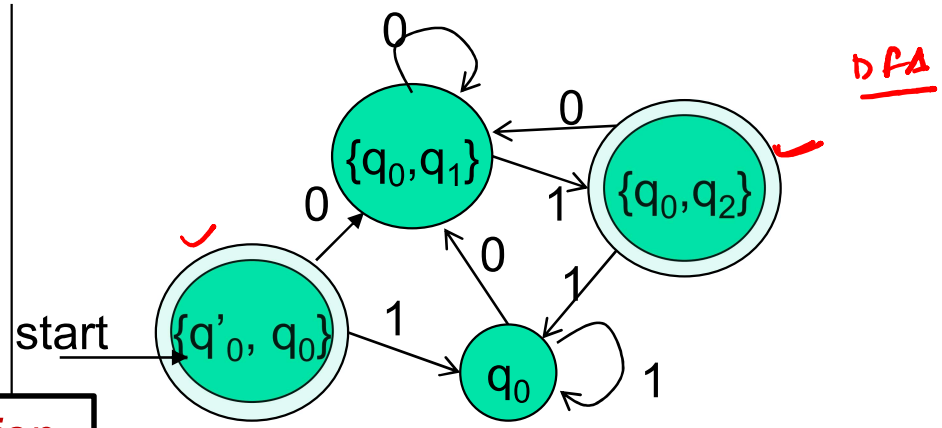

ECLOSE

union

δ_E	0	1	ε
→ *q'_0	Ø	Ø	$\{q'_0,q_0\}$
q_0	$\{q_0,q_1\}$	$\{q_0\}$	$\{q_0\}$
q_1	Ø	$\{q_2\}$	$\{q_1\}$
*q_2	Ø	Ø	$\{q_2\}$

δ_D	0	1
→ *$\{q'_0,q_0\}$	$\{q_0,q_1\}$	$\{q_0\}$
$\{q_0,q_1\}$	$\{q_0,q_1\}$	$\{q_0,q_2\}$
$\{q_0\}$	$\{q_0,q_1\}$	$\{q_0\}$
*$\{q_0,q_2\}$	$\{q_0,q_1\}$	$\{q_0\}$

Summary

- DFA
  - Definition
  - Transition diagrams & tables
- Regular language
- NFA
  - Definition
  - Transition diagrams & tables
- DFA vs. NFA
- NFA to DFA conversion using subset construction
- Equivalency of DFA & NFA
- Removal of redundant states and including dead states
- ε-transitions in NFA
- Text searching applications

Internet sources

1. https://www.eecs.wsu.edu/~ananth/CptS317/Lectures/index.htm
2. https://nptel.ac.in/courses/106/104/106104028/
3. https://nptel.ac.in/courses/106/104/106104148/

abba
aabba
aaabba
babba
ababba
bbabba
bbbabba

baabba

ababa

ababba

- Draw a DFA for the language accepting strings ending with ‘abba’ over input alphabets ∑ = {a, b}

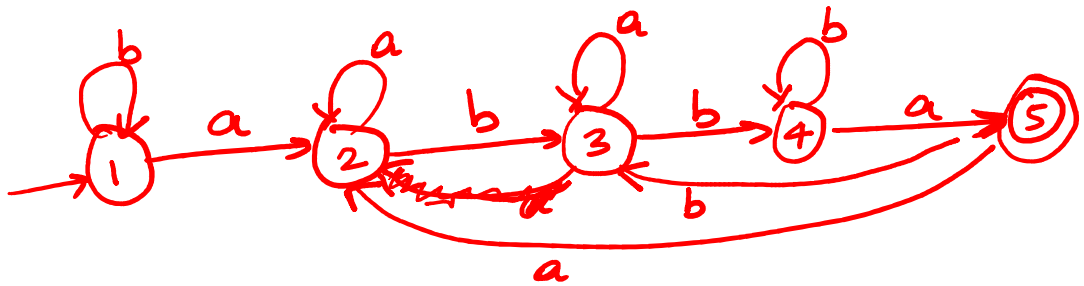

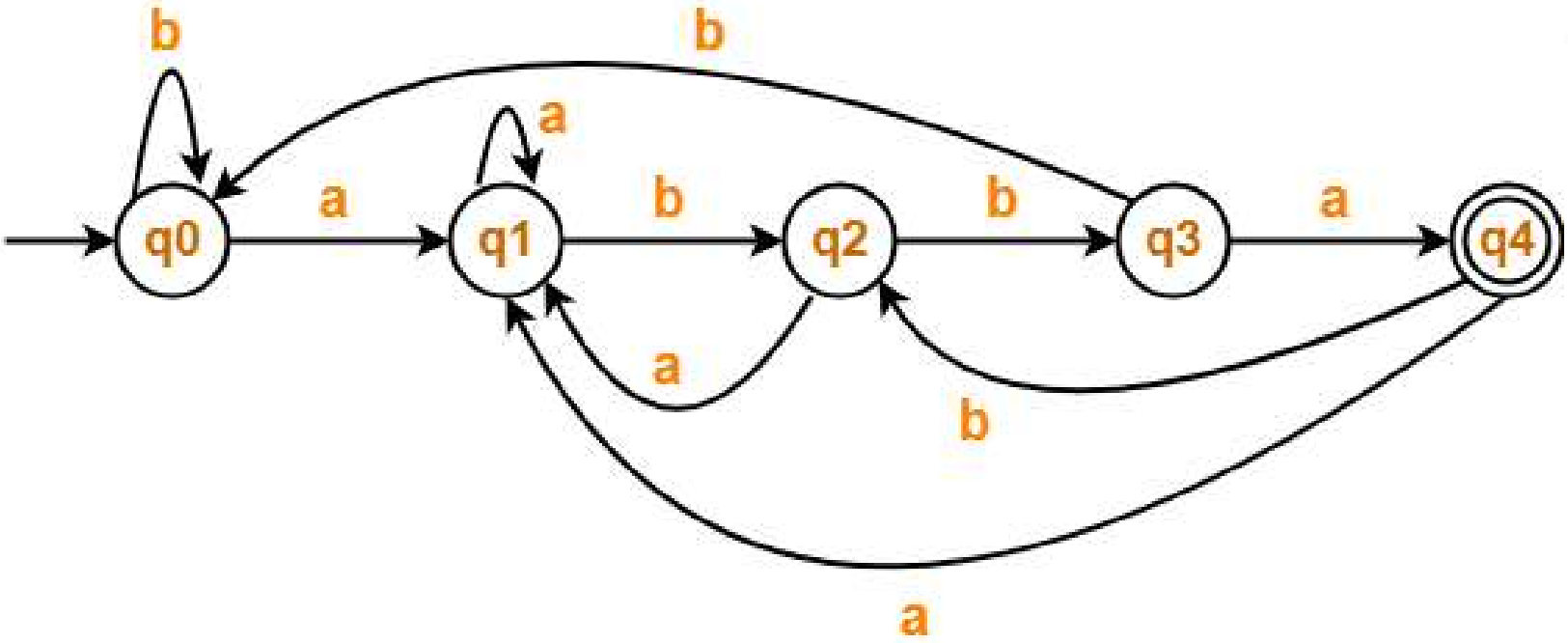

DFA

aba
abb
abbb
abab
abaaa

- Draw a DFA for the language accepting strings starting with ‘ab’ over input alphabets ∑ = {a, b}

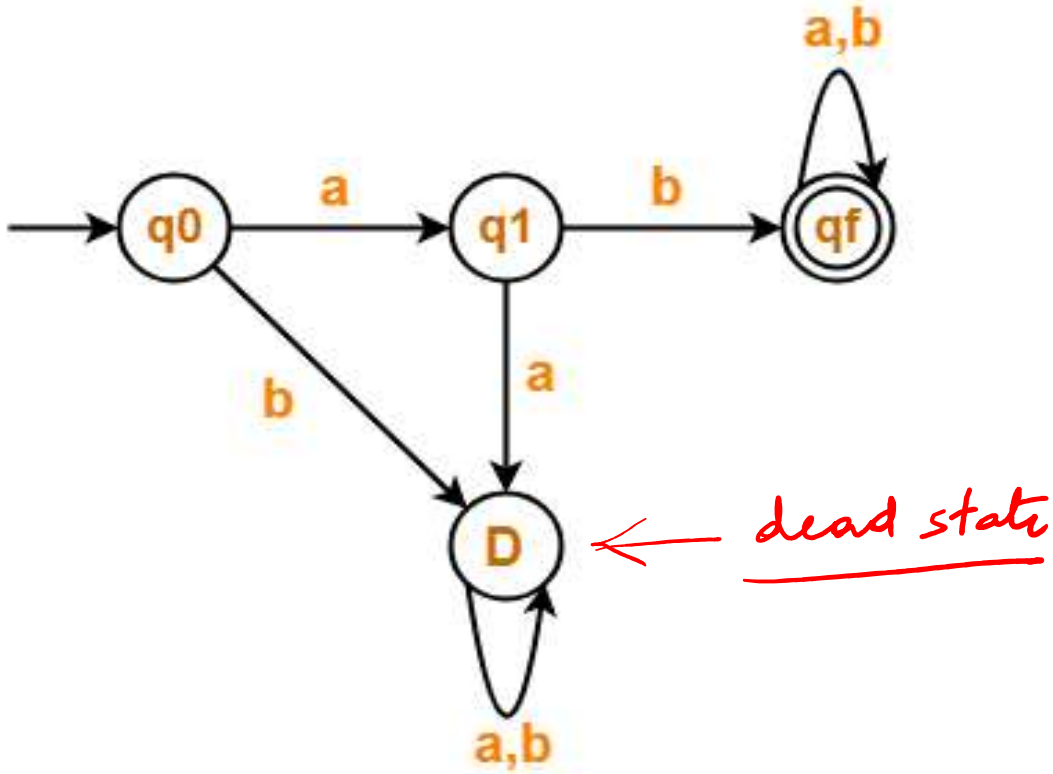

DFA

NFA / NDFA

- Draw a non-deterministic finite automate which accepts 00 or 11 at the end of a string containing 0, 1 in it, e.g., 01010100 but not 000111010.
- 0101011 or
- 011 or
- 100
- 0011

0101011 or
011 or
100
0011

NFA

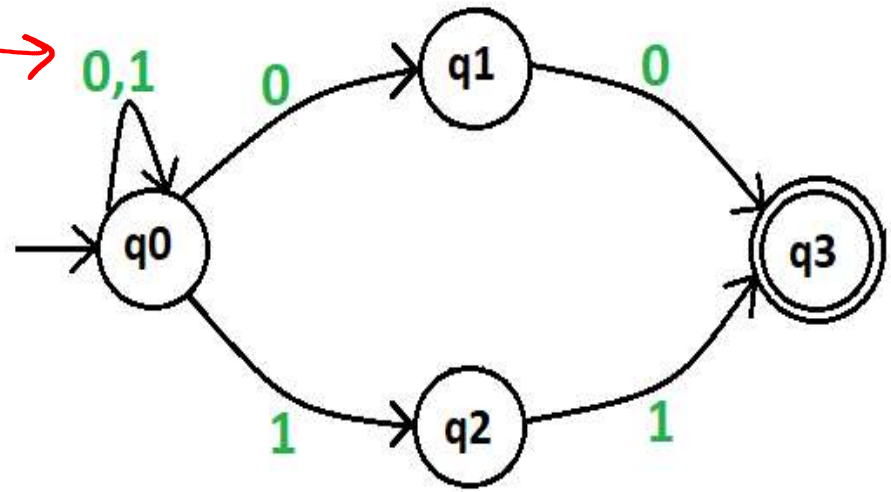

- Draw a non-deterministic finite automata which accept a string containing “ing” at the end of a string in a string of {a-z}, e.g., “anything” but not “anywhere”

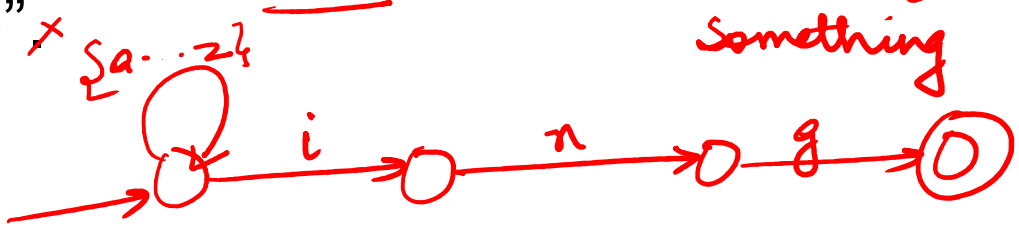

something

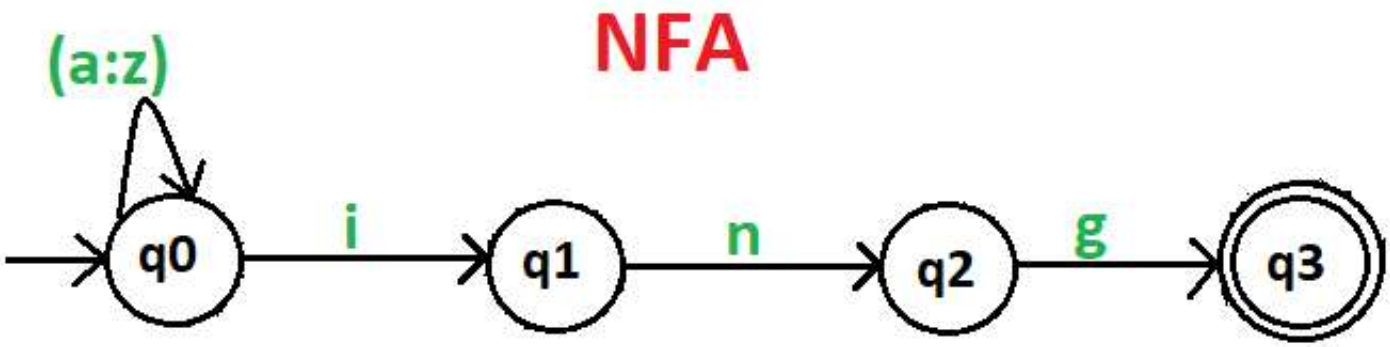
NFA
(a:z)
q0
i
q1
n
q2
g
q3

- Convert the following Non-Deterministic Finite Automata (NFA) to Deterministic Finite Automata (DFA)-

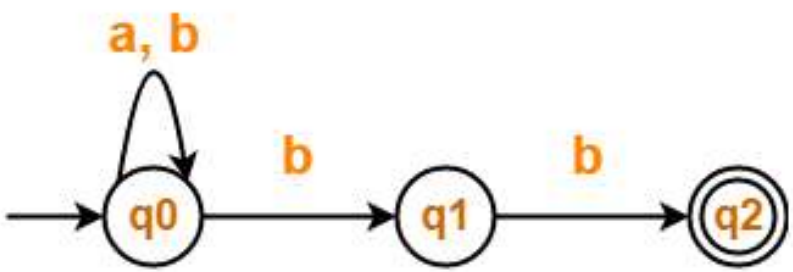

	a	b
q_0	q_0	q_0 q_1
q_1	ϕ	b
q_2	ϕ	ϕ

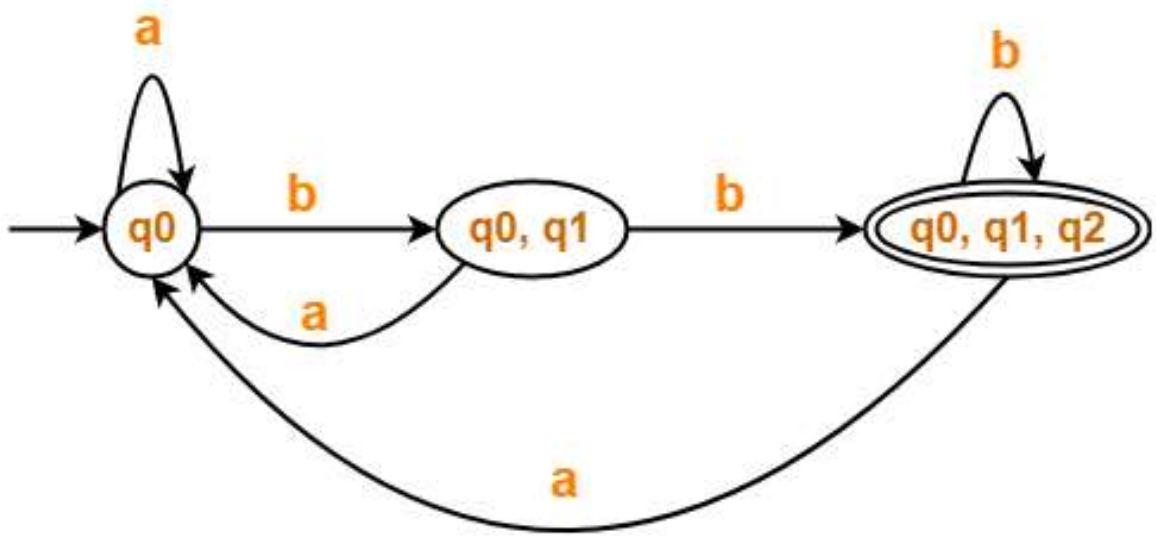

Deterministic Finite Automata (DFA)

- Convert the following Non-Deterministic Finite Automata (NFA) to Deterministic Finite Automata (DFA)-

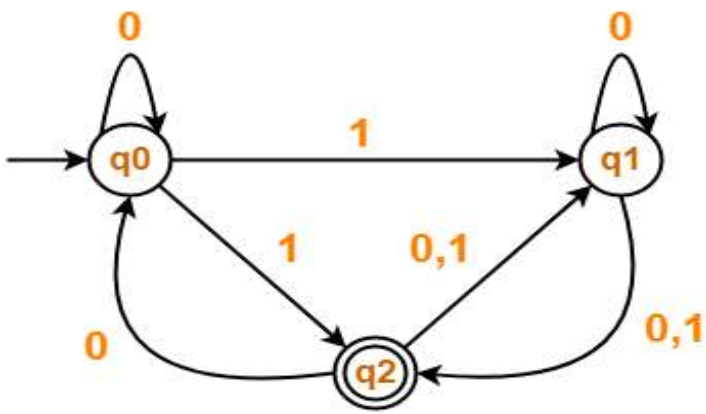

	0	1
→ q_0	q_0	$q_1 q_2$
q_1	$q_1 q_2$	q_2
q_2	$q_0 q_1$	q_1

	0	1
→ q_0	q_0	$q_1 q_2$
$q_1 q_2$	$q_0 q_1 q_2$	$q_1 q_2$
$q_0 q_1 q_2$	$q_0 q_1 q_2$	$q_1 q_2$

← DFA

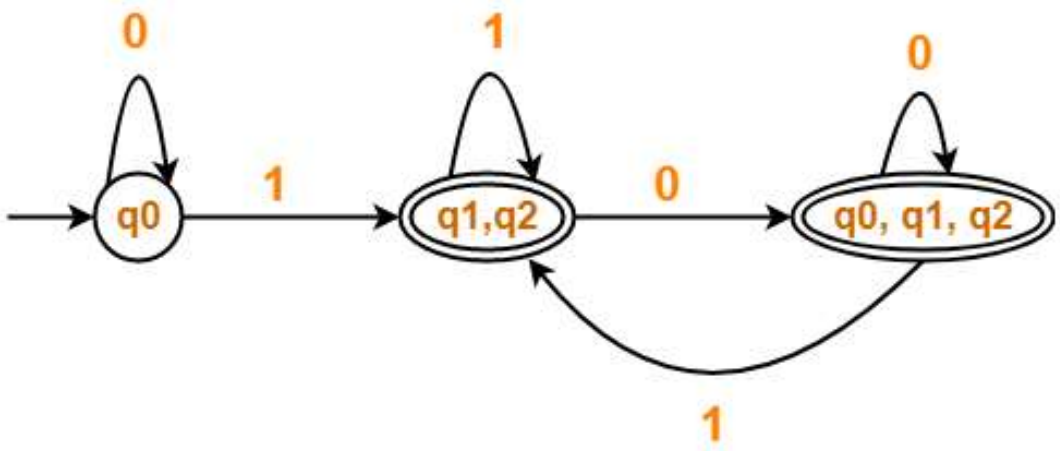

Deterministic Finite Automata (DFA)

Find the string recognized by this FA

a bbb a

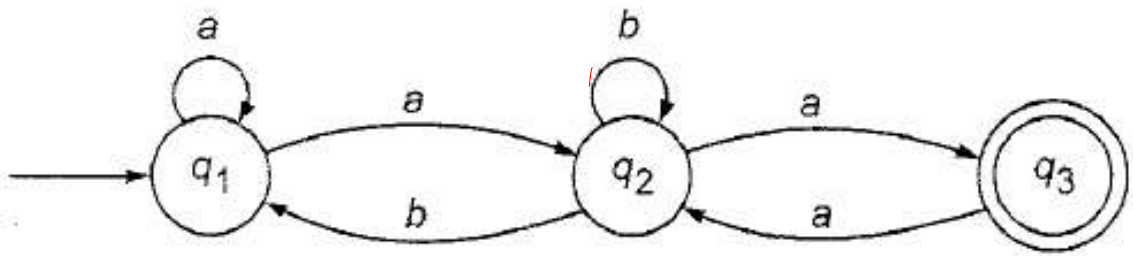

× ① strings ending ba

× ② strings ending aa ×

✓ ③ a followed any no. of b's then a ✓ ending with

✓ ④ string starting with an 'a' & ending with an 'a' having zero/more bs in between a's

Describe in English the set accepted by this FA

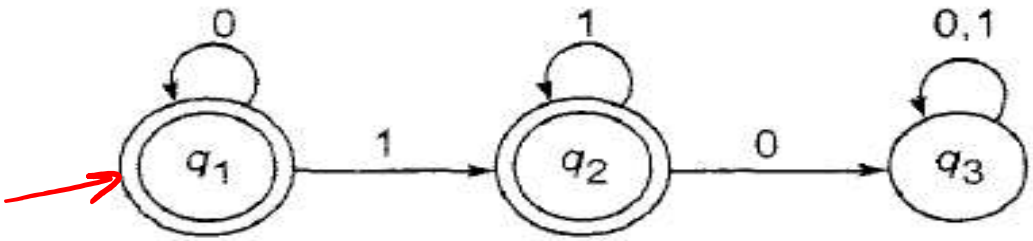

string containing 'i' number of 0's or 1's

✓ starting with 0's string not containing 10

× string containing continous 1's and continuous 0's

NFA

State/Σ	0	1
→ q_0	q_0, q_3	q_0, q_4
q_3	q_f	
q_4		q_f
q_f	q_f	q_f

DFA → 5 states

DFA

Q	Q_0	Q_1
$\rightarrow [q_0]$	$[q_0, q_3]$	$[q_0, q_4]$
$[q_0, q_3]$	$[q_0, q_3, q_f]$	$[q_0, q_4]$
$[q_0, q_4]$	$[q_0, q_3]$	$[q_0, q_4, q_f]$
$[q_0, q_3, q_f]$	$[q_0, q_3, q_f]$	$[q_0, q_4, q_f]$
$[q_0, q_4, q_f]$	$[q_0, q_3, q_f]$	$[q_0, q_4, q_f]$

Minimization of DFA

Example 1

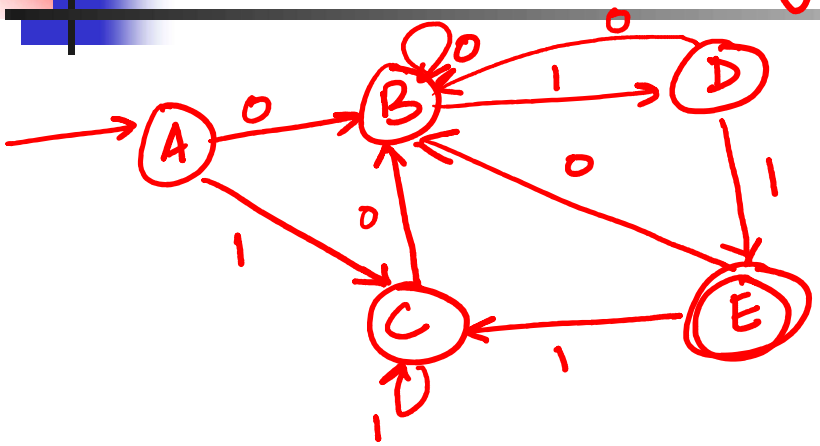

	0	1
→ A	B	C
B	B	D
C	B	C
D	B	E
E	B	C

Partitioning Method for minimization of DFA

P_0 π_0 ABCDE

P_0 (ABCD) (E)

P_1 (ABC)(D) (E)

P_2 (AC) (B) (D) (E)

A B D E

minimized DFA

	0	1
A	B	A
B	B	D
D	B	E
E	B	A

minimization of DFA (Example 2)

DFA

	0	1
→ A	B	C
B	D	E
C	E	D
D	F	F
E	F	F
F	F	F

→ minimized DFA

P_0 (ADE) (BCF)

P_1 (ADE) (BC) (F)

P_2 $(\underset{A}{A})$ $(\underbrace{DE}_{B})$ $(\underbrace{BC}_{C})$ $(\underbrace{F}_{F})$

	0	1
→ A	B	C
B	B	B
C	B	B
F	F	F

minimized DFA

~~Exmplo~~ Example 3 of minimization of DFA

	0	1
→ q_0	q_1	q_5
q_1	q_6	q_2
q_2	q_0	q_2
q_3	q_2	q_6
q_4	q_7	q_5
q_5	q_2	q_6
q_6	q_6	q_4
q_7	q_6	q_2

P_0 $(q_0\, q_1\, q_3\, q_4\, q_5\, q_6\, q_7)\ (q_2)$

P_f $(q_0 q_4)(q_1 q_7)(q_2)(q_3 q_5)(q_6)$

<u>5 state DFA</u>

Equivalence & Minimization of DFAs

Applications of interest

- Comparing two DFAs:
  - $L(DFA_1) == L(DFA_2)$?

- How to minimize a DFA?
  1. Remove unreachable states
  2. Identify & condense equivalent states into one

When to call two states in a DFA "equivalent"?

Two states p and q are said to be *equivalent* iff:

i) Any string w accepted by starting at p is also accepted by starting at q;

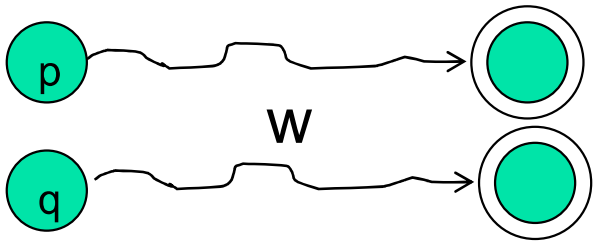

AND

i) Any string w rejected by starting at p is also rejected by starting at q.

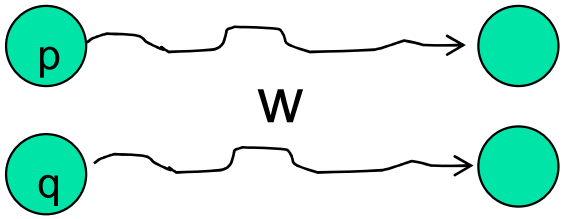

➔ p≡q

Computing equivalent states in a DFA

Table Filling Algorithm

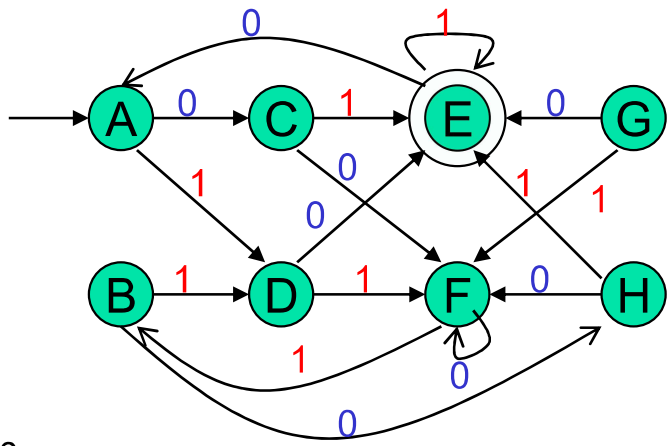

A	=							
B	=	=						
C	x	x	=					
D	x	x	x	=				
E	x	x	x	x	=			
F	x	x	x	x	x	=		
G	x	x	x	=	x	x	=	
H	x	x	=	x	x	x	x	=
	A	B	C	D	E	F	G	H

Pass #0

1. Mark accepting states ≠ non-accepting states

Pass #1

1. Compare every pair of states
2. Distinguish by one symbol transition
3. Mark = or ≠ or blank(tbd)

Pass #2

1. Compare every pair of states
2. Distinguish by up to two symbol transitions (until different or same or tbd)

….

(keep repeating until table complete)

Table Filling Algorithm - step by step

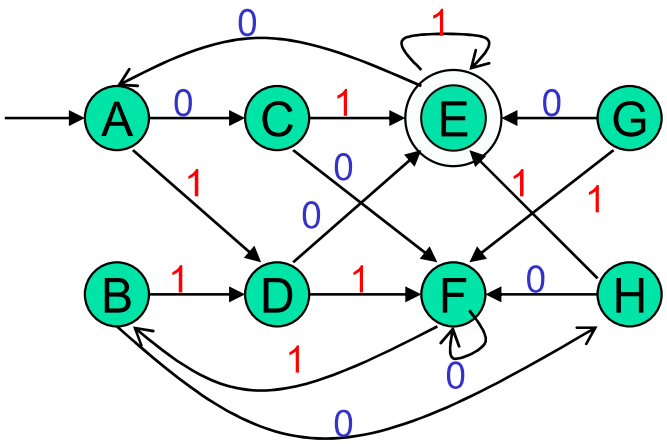

A	=							
B		=						
C			=					
D				=				
E					=			
F						=		
G							=	
H								=
	A	B	C	D	E	F	G	H

Table Filling Algorithm - step by step

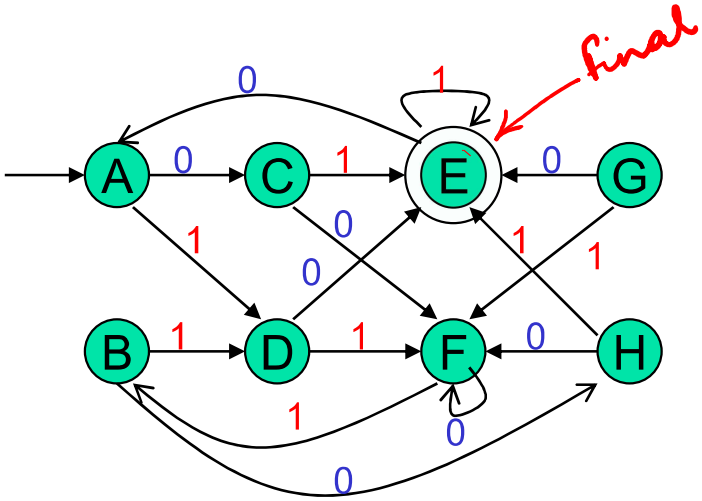

	A	B	C	D	E	F	G	H
A	~~X~~							
B		~~X~~						
C			~~X~~					
D				~~X~~				
E	X	X	X	X	~~X~~			
F					X	~~X~~		
G					X		~~X~~	
H					X			~~X~~

1. Mark X between accepting vs. non-accepting state

Table Filling Algorithm - step by step

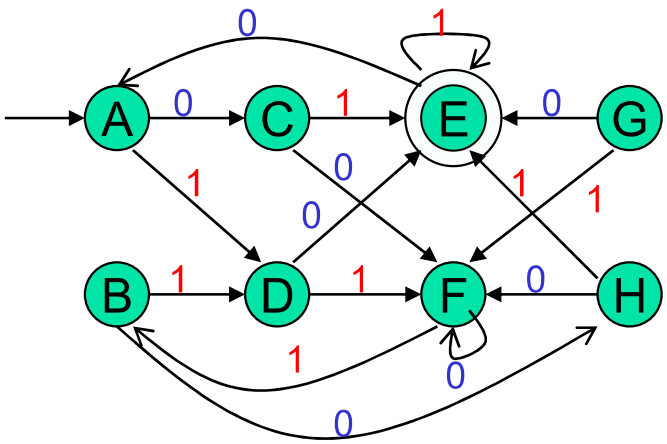

	A	B	C	D	E	F	G	H
A	=							
B		=						
C	X		=					
D	X			=				
E	X	X	X	X	=			
F					X	=		
G	X				X		=	
H	X				X			=

1. Mark X between accepting vs. non-accepting state
2. Look 1- hop away for distinguishing states or strings

Table Filling Algorithm - step by step

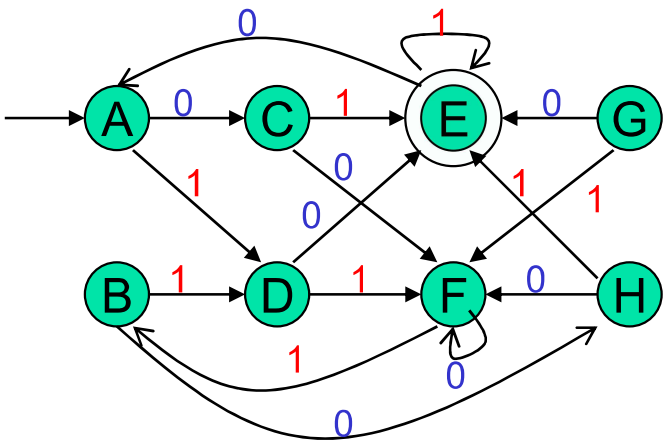

	A	B	C	D	E	F	G	H
A	=							
B		=						
C	X	X	=					
D	X	X		=				
E	X	X	X	X	=			
F					X	=		
G	X	X			X		=	
H	X	X			X			=

1. Mark X between accepting vs. non-accepting state
2. Look 1- hop away for distinguishing states or strings

Table Filling Algorithm - step by step

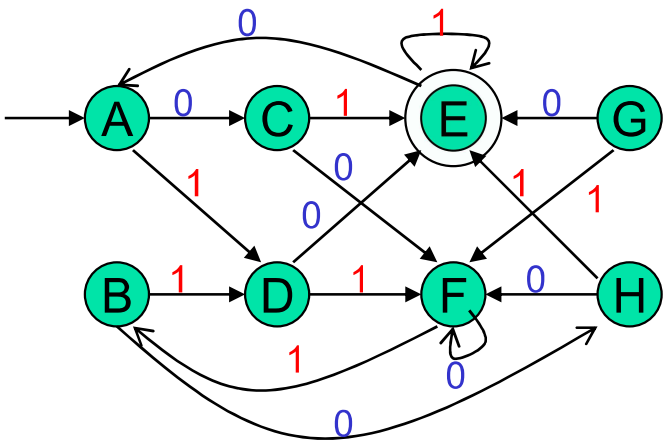

A	=							
B		=						
C	X	X	=					
D	X	X	X	=				
E	X	X	X	X	=			
F			X		X	=		
G	X	X	X		X		=	
H	X	X	=		X			=
	A	B	C	D	E	F	G	H

1. Mark X between accepting vs. non-accepting state
2. Look 1- hop away for distinguishing states or strings

Table Filling Algorithm - step by step

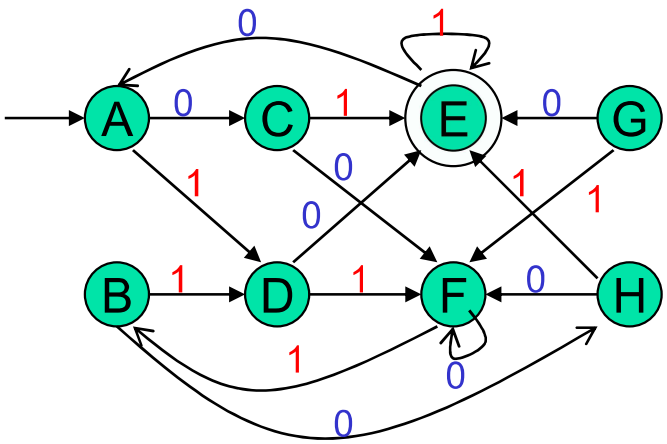

A	=							
B		=						
C	X	X	=					
D	X	X	X	=				
E	X	X	X	X	=			
F			X	X	X	=		
G	X	X	X	=	X		=	
H	X	X	=	X	X			=
	A	B	C	D	E	F	G	H

1. Mark X between accepting vs. non-accepting state
2. Look 1- hop away for distinguishing states or strings

Table Filling Algorithm - step by step

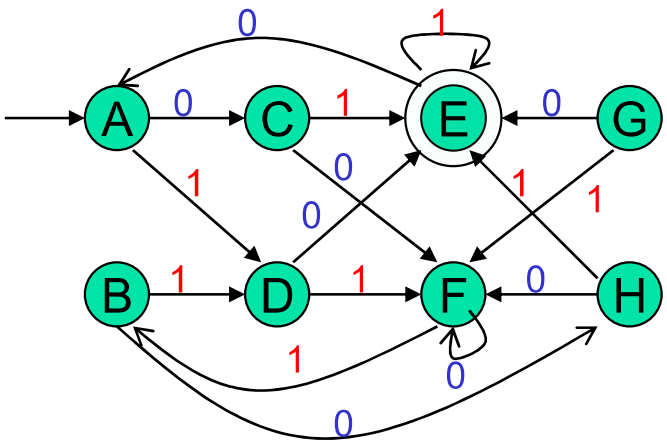

A	=							
B		=						
C	X	X	=					
D	X	X	X	=				
E	X	X	X	X	=			
F			X	X	X	=		
G	X	X	X	=	X	X	=	
H	X	X	=	X	X	X		=
	A	B	C	D	E	F	G	H

1. Mark X between accepting vs. non-accepting state
2. Look 1- hop away for distinguishing states or strings

Table Filling Algorithm - step by step

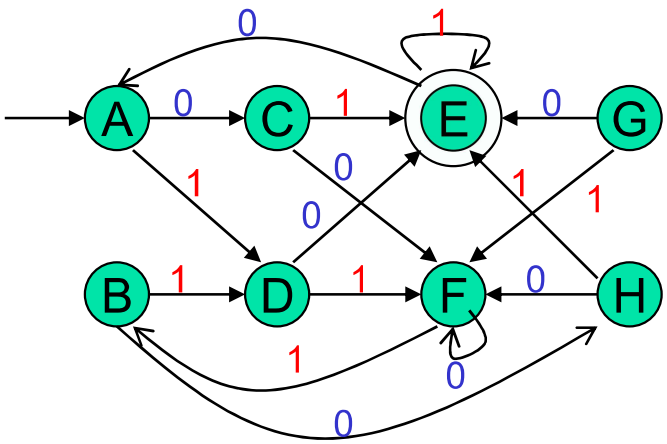

1. Mark X between accepting vs. non-accepting state
2. Look 1- hop away for distinguishing states or strings

A	=							
B		=						
C	X	X	=					
D	X	X	X	=				
E	X	X	X	X	=			
F			X	X	X	=		
G	X	X	X	=	X	X	=	
H	X	X	=	X	X	X	X	=
	A	B	C	D	E	F	G	H

Table Filling Algorithm - step by step

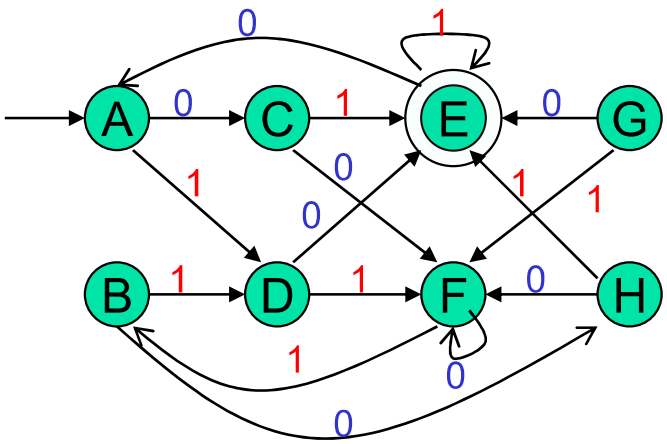

A	=							
B	**=**	=						
C	X	X	=					
D	X	X	X	=				
E	X	X	X	X	=			
F	**X**	**X**	X	X	X	=		
G	X	X	X	**=**	X	X	=	
H	X	X	**=**	X	X	X	X	=
	A	B	C	D	E	F	G	H

1. Mark X between accepting vs. non-accepting state
2. Pass 1:
   Look 1- hop away for distinguishing states or strings
3. Pass 2:
   Look 1-hop away again for distinguishing states or strings

continue….

Table Filling Algorithm - step by step

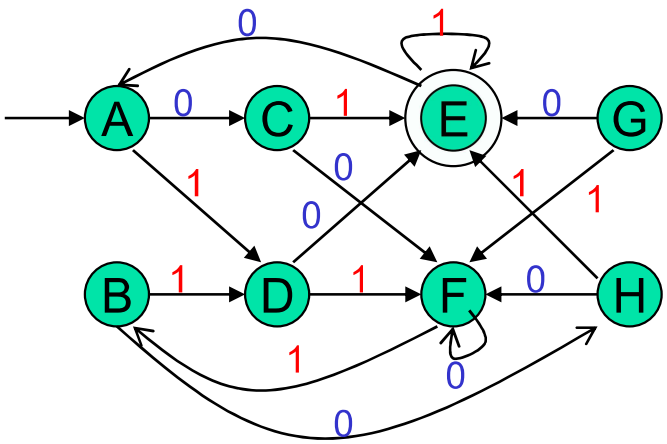

	A	B	C	D	E	F	G	H
A	=							
B	=	=						
C	X	X	=					
D	X	X	X	=				
E	X	X	X	X	=			
F	X	X	X	X	X	=		
G	X	X	X	=	X	X	=	
H	X	X	=	X	X	X	X	=

1. Mark X between accepting vs. non-accepting state
2. Pass 1:
   Look 1- hop away for distinguishing states or strings
3. Pass 2:
   Look 1-hop away again for distinguishing states or strings

continue….

Equivalences:
- A=B
- C=H
- D=G

Table Filling Algorithm - step by step

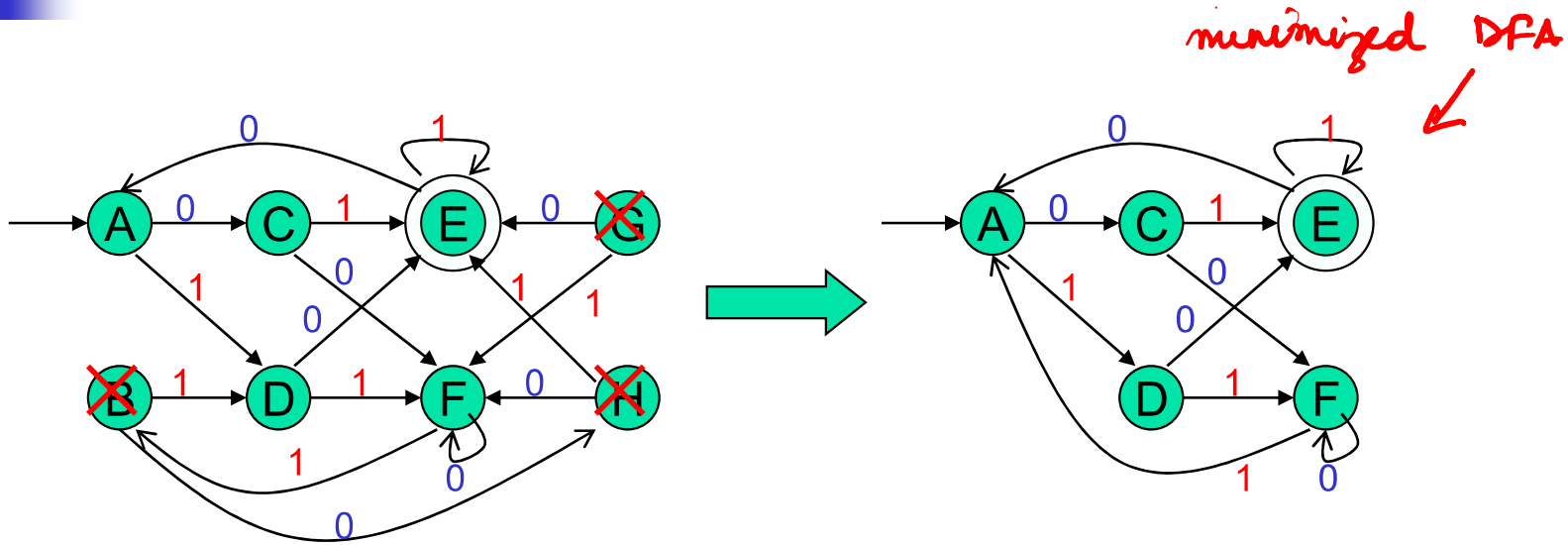

Retrain only one copy for each equivalence set of sta

Equivalences:
- A=B
- C=H
- D=G

Table Filling Algorithm – special case – Assignment

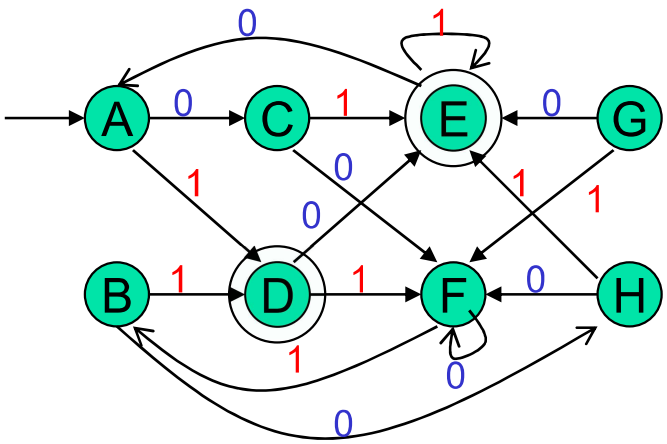

	A	B	C	D	E	F	G	H
A	=							
B		=						
C			=					
D				=				
E				?	=			
F						=		
G							=	
H								=

Q) What happens if the input DFA has more than one final state?

Can all final states initially be treated as equivalent to one another?

How to minimize a DFA?

- <u>Goal:</u> Minimize the number of states in a DFA
- <u>Algorithm:</u>
  1. Eliminate states unreachable from the start state
  2. Identify and remove equivalent states
  3. Output the resultant DFA

Depth-first traversal from the start sta

Table filling algorithm

Are Two DFAs Equivalent?

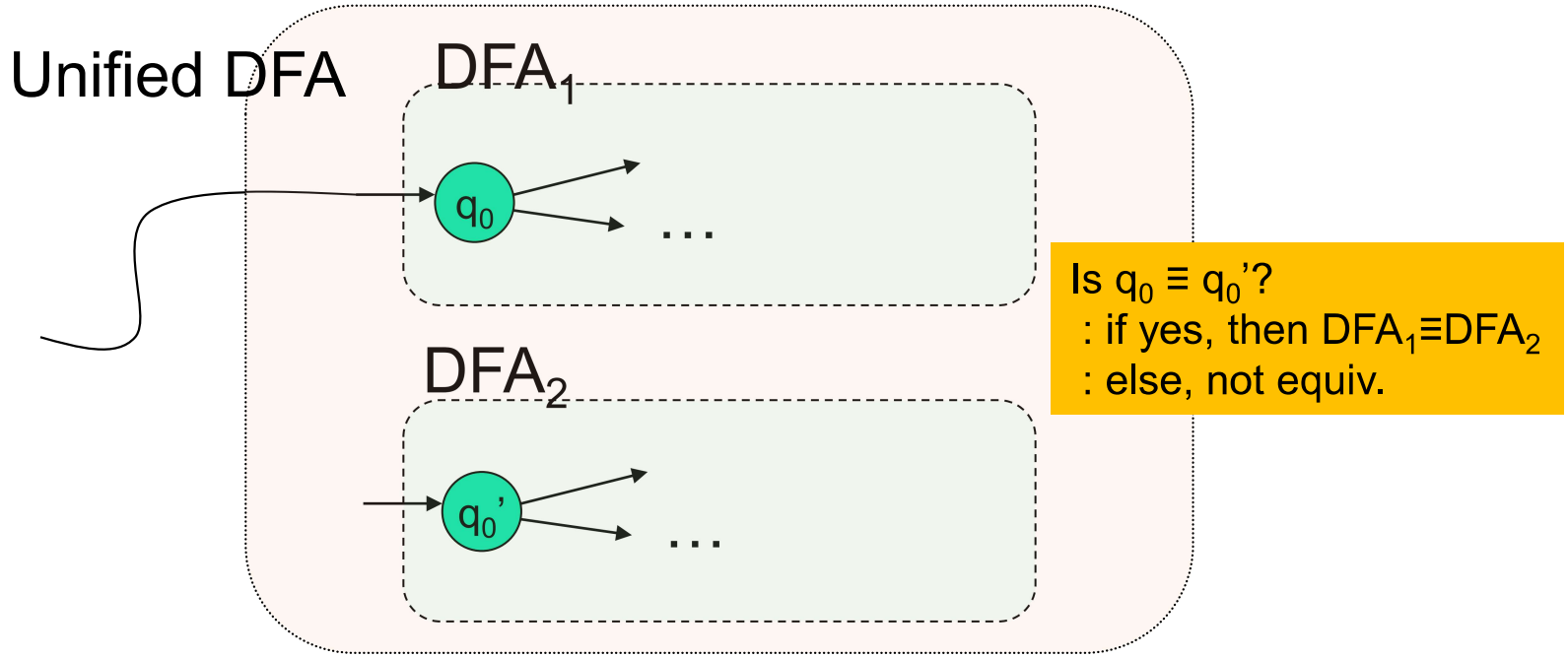

1. Make a new dummy DFA by just putting together both DFAs
2. Run table-filling algorithm on the unified DFA
3. *IF* the start states of both DFAs are found to be equivalent,

   THEN: $DFA_1 \equiv DFA_2$

   ELSE: different

Myhill-Nerode Theorem
(table filling method)

Steps:

1) Draw a table for all pairs of states (P,Q)
2) Mark all pairs where $P \in F$ and $Q \notin F$
3) If there are any Unmarked pairs (P,Q) such that $[\delta(P,x), \delta(Q,x)]$ is marked, then mark [P,Q] where 'x' is an input symbol
   REPEAT THIS UNTIL NO MORE MARKINGS CAN BE MADE
4) Combine all the Unmarked Pairs and make them a single state in the minimized DFA

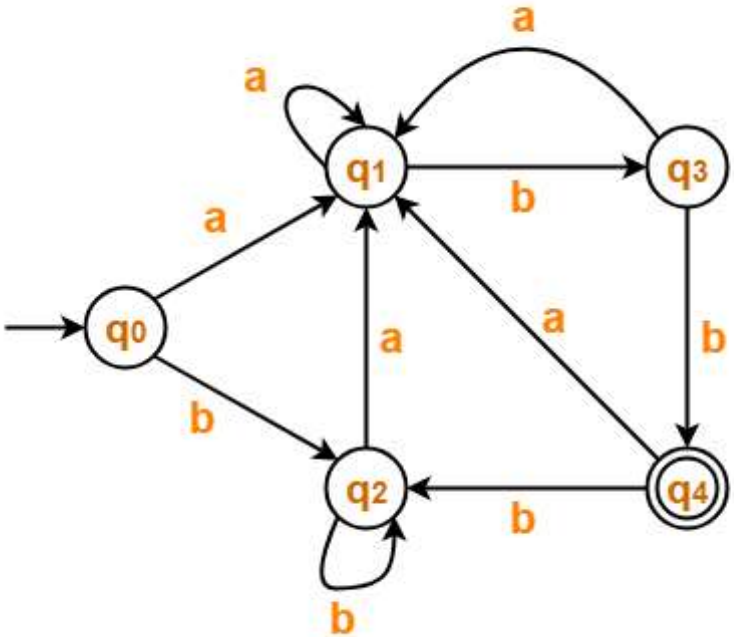
a
a
q1
q3
b
a
q0
a
a
b
b
q2
q4
b
b

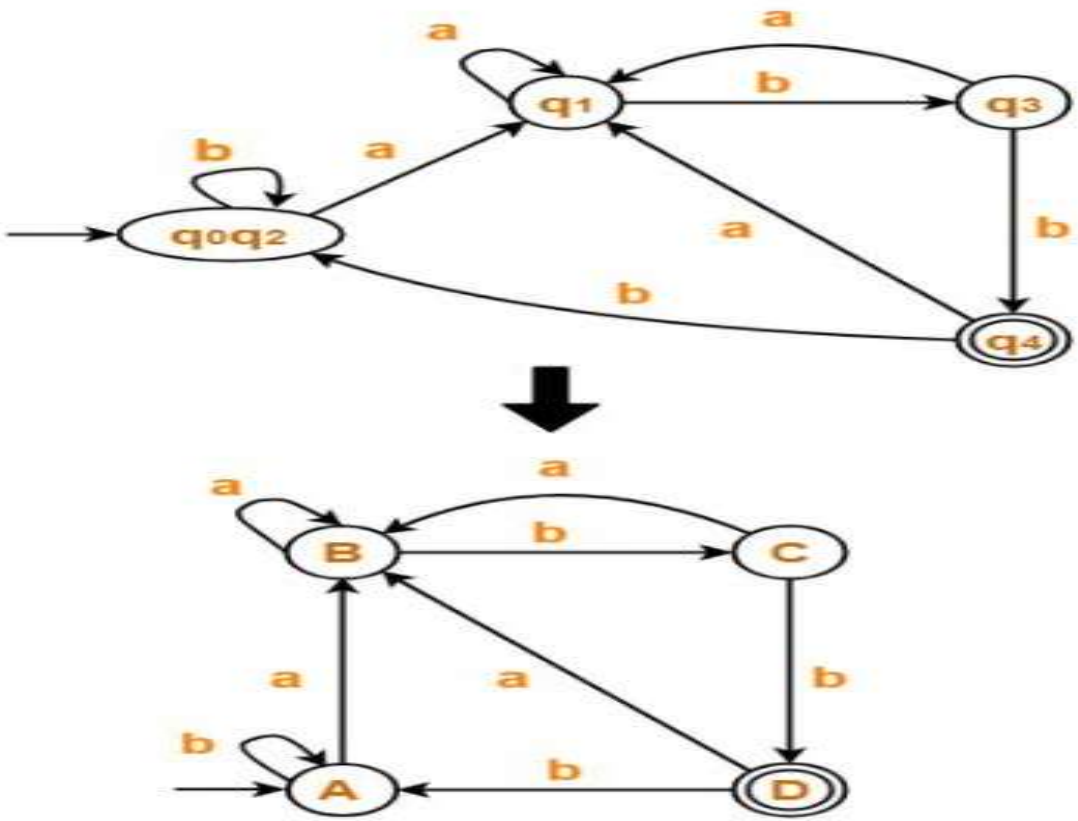
a
a
b
q1
q3
b
a
q0q2
a
b
b
q4
a
a
B
b
C
a
a
b
b
A
b
D

Minimize the given DFA

NFA
↳ DFA
↳ minimized DFA

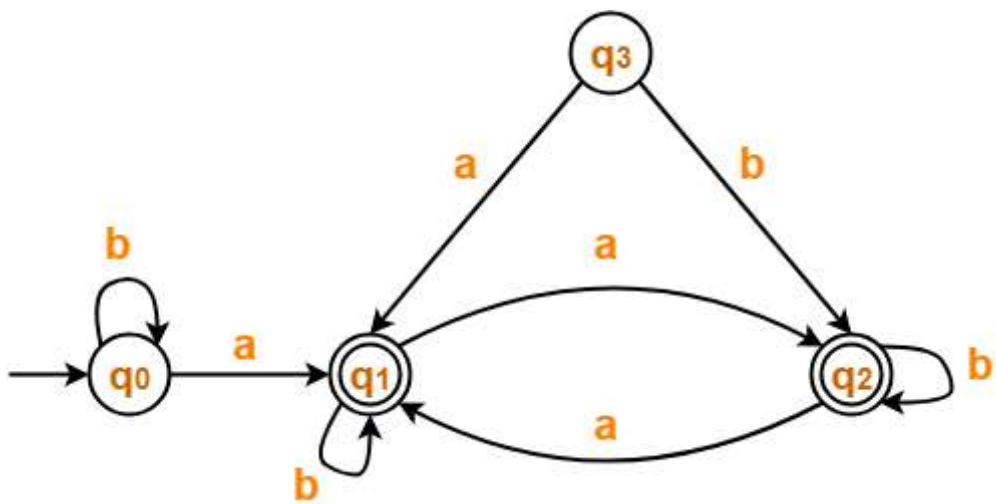

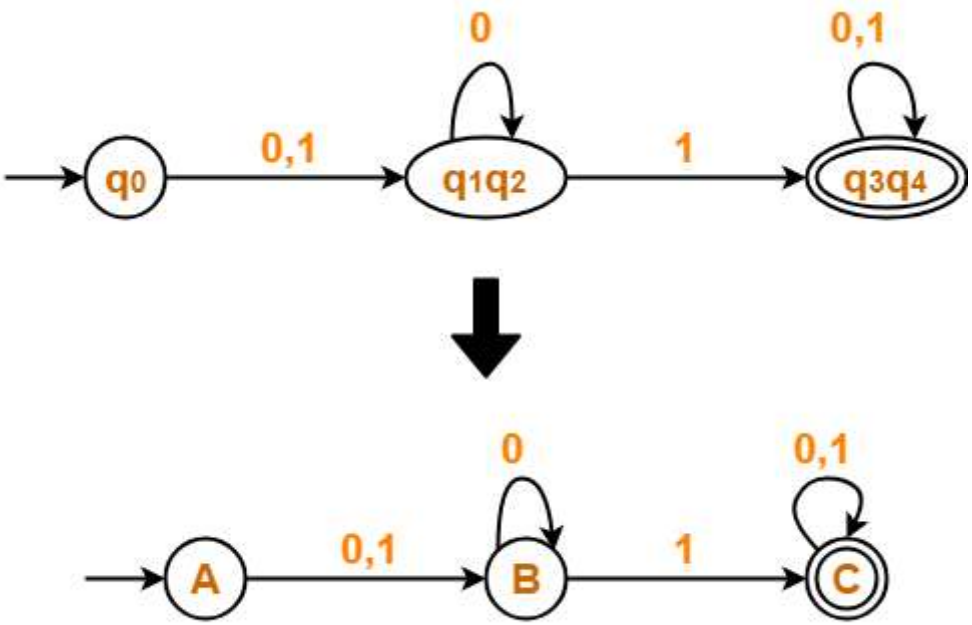

Minimal DFA