CC NUMBER :-

WARD :-

LANDOWNER OR APPLICANT NAME :- Shri Ekanath Butya Bhoir

LICENSED ARCHITECT OR ENGINEERS NAME :- B.S. Ranade (M/S R.K. Associate)

VILLAGE NAME :- Chole

SURVEY NO. :- 139 (Old), 18 (19(New)

HOUSE NO. :- 2

TALUKA NAME :- Kalyan

INFORMATION OF BUILDING PROPOSAL AS PER PLANS ATTACHED

BUILDING NO. :-

PROPERTY ADDRESS :- Sai Ganesh Building No 2.

LAND MARK :- Morya Complex

ARE ALL CONNECTIONS ON SITE DISCONNECTED FROM THE MAIN LINE? :-

~~YES~~ ✓

~~NO~~ ✓ NO

IS A SEWAGE TREATMENT PLANT PROPOSED FOR THE PROPOSAL? :-

~~YES~~

NO ✓

PROPOSED WATER REQUIREMENT FOR RESIDENCES (IN LITRE)

Enter Only the Numeric Value :- 10,000 Ltr.

PROPOSED WATER REQUIREMENT FOR SHOPS (IN LITRE)

Enter Only the Numeric Value:-

PROPOSED WATER REQUIREMENT FOR OFFICES (IN LITRE)

Enter Only the Numeric Value :-

TOTAL QUANTITY OF WATER REQUIRED (IN LITRE) :- 10,000 Ltr.

Scanned with OKEN Scanner

Total of All Proposed Quantities added above

ARE THE SIZES AND CAPACITIES OF THE OH AND UG TANKS SUFFICIENT?

Select a value ...

YES ✓

NO

LENGTH OF UG TANK PROPOSED :- 3.65

WIDTH OF UG TANK PROPOSED :- 3.00

DEPTH OF UG TANK PROPOSED :- 2.75

SIZE AND CAPACITY OF UG TANK PROPOSED (IN LITRE) :- 30000

LENGTH OF OH TANK PROPOSED:- 2.46

WIDTH OF OH TANK PROPOSED :- 3.39

HEIGHT OF OH TANK PROPOSED :- 2.30

SIZE AND CAPACITY OF OH TANK PROPOSED (IN LITRE) :- 19980 Ltr.

Domestic Tank

DISTANCE OF UG TANK FROM SUPPLY LINE (IN METRE):- 65.00 (Approx)

UPLOAD CC CERTIFICATE :-

Choose files or drag and drop files to upload

UPLOAD MUNICIPAL PLAN:-

Choose files or drag and drop files to upload

UPLOAD OTHER DOCUMENT

Choose files or drag and drop files to upload

UPLOAD DECLARATION CERTIFICATE

Choose files or drag and drop files to upload

UPLOAD SIGNED DOCUMENT OF LICENCED PLUMBER &BUILDER, &DEVELOPER

भागवत लायसन्स प्लम्बर
आणि बिल्डींग रिपेरींग वर्क
KDMC/WS.PLNO/118
सही

Eaknath Bhoir

Scanned with OKEN Scanner

कल्याण डोंबिवली
महानगरपालिका
पाणीपुरवठा विभाग
प्लंबर परवान्याचे नूतनीकरण

परवाना क्रमांक :KDMC/WS/PLNO/118
नाव :Bhagwat Laxman Bhise
पत्ता : - - - Trimurti Nagar - - - Dombivili (E) - - - - -
दि. : 2022-04-01 ते 2027-03-31

कल्याण डोंबिवली महानगरपालिका, जि.ठाणे.

परवानाधारकाची सही

कार्यकारी अभियंता(पी. पु.)
कल्याण डोंबिवली महानगरपालिका,
कल्याण

भागवत लायसन्स प्लम्बर
आणि बिल्डींग रिपेरींग वर्क
KDMC/WS/PLNO/118

सही

Scanned with OKEN Scanner

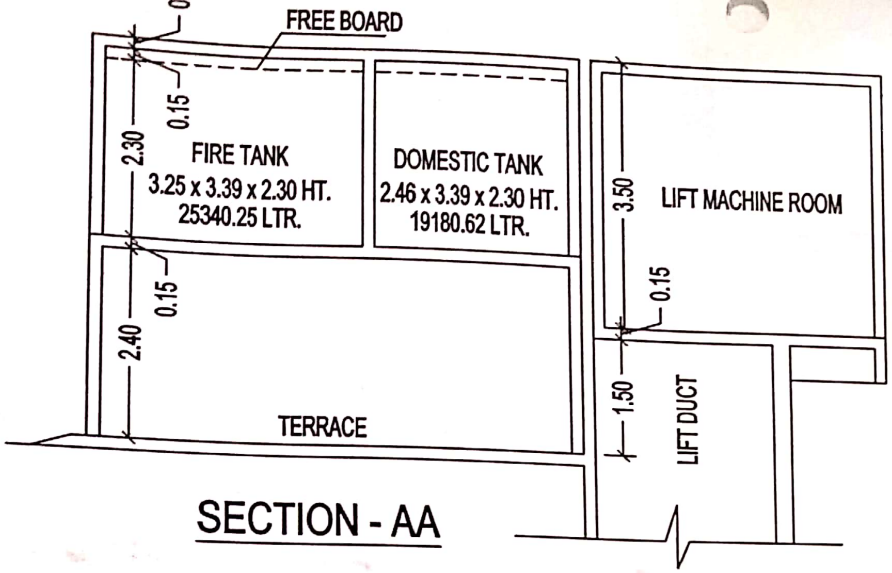

SECTION - AA

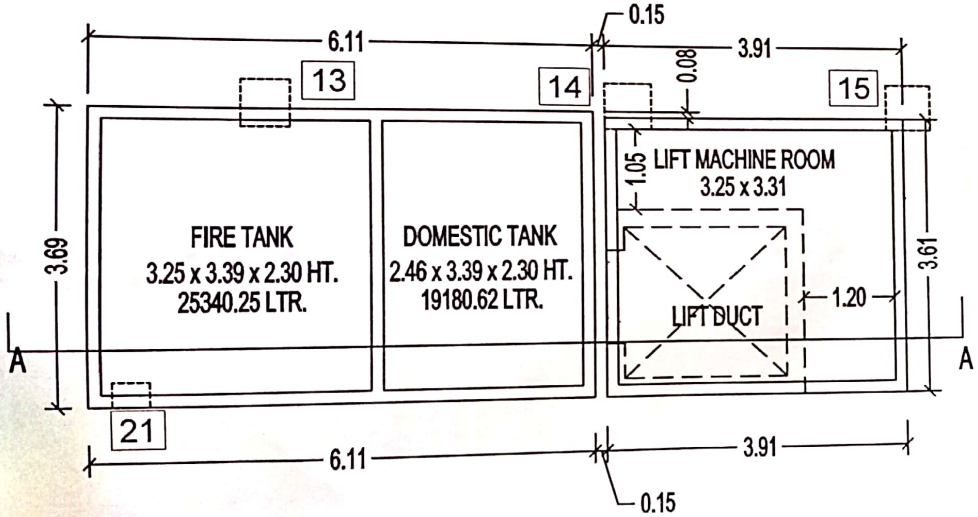

PLAN

O.H. WATER TANK & LIFT MACHINE ROOM

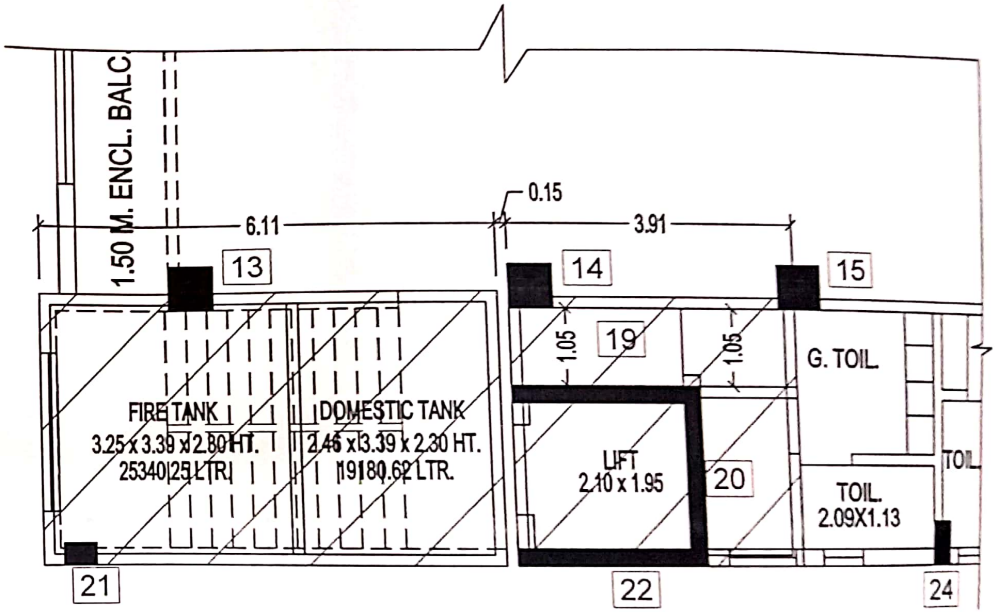

DATE - 28/11/2025

DESCRIPTION OF PROPOSAL & PROPERTY	ARCHITECT
PROPOSED BUILDING ON PLOT BEARING S. NO. 18, H.NO. 2 MOUJE - CHOLE, TAL-KALYAN, DIST.-THANE.	B.S.RANADE CA/75/02276 R. K. ASSOCIATES 206,207,208,2nd FLOOR, JAGANNATH'S COMMERCE PLAZA, NEAR GODREJ SHOWROOM, MANPADA ROAD, DOMBIVLI (E)

Scanned with OKEN Scanner