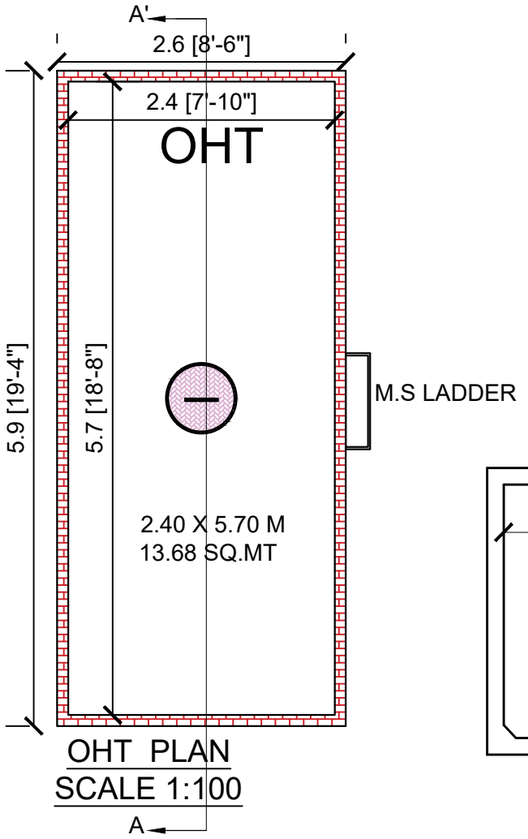

OHT PLAN
SCALE 1:100

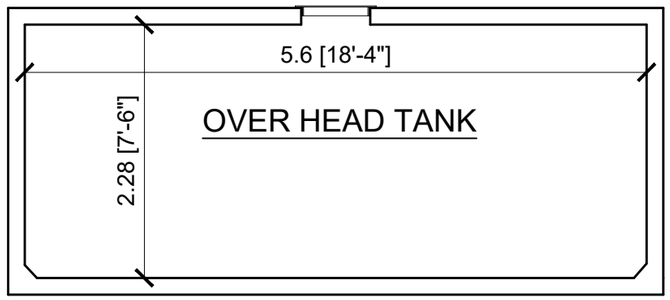

SECTION A -A'

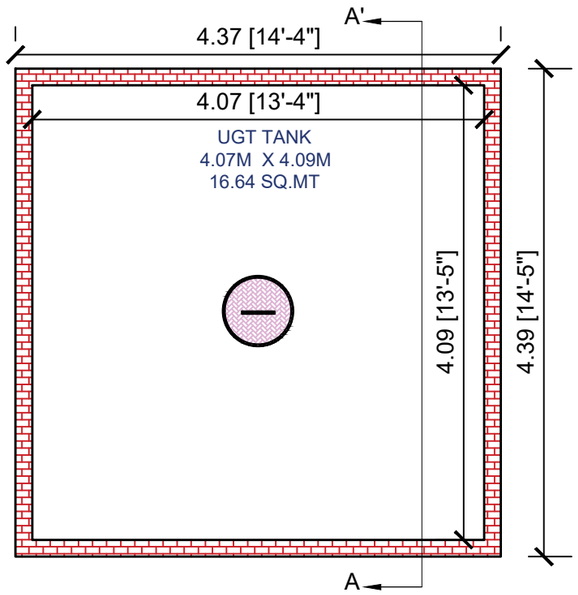

UG TANK
SCALE 1: 100

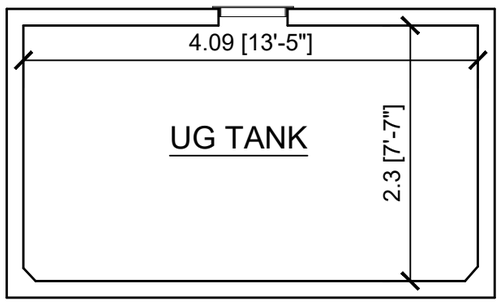

SECTION A -A'

JOB NO.	DRAWING NO.	DRAWN BY	CHECKED BY	APPROVED BY
	1	RUTA	AR.SHREYAS DESHMUKH	AR.DILIP DESHMUKH

ARCHITECTS AND ENVIRONMENTAL PLANNER
CA / 86 / 09657

AR.DILIP DESHMUKH & ASSOCIATES
"D" WING GROUND FLOOR, PARAMOUNT PARK APARTMENT
IN FRONT OF LODHA REGENCY, BEHIND RUSWAL GARDENS
MANPADA-SANDAP ROAD, DOMBIVALI (EAST)

DILIP SUDHAKAR DESHMUKH
Digitally signed by DILIP SUDHAKAR DESHMUKH
Date: 2022.08.31 12:09:42 +05'30'

SIGNATURE OF LICENSED ARCHITECT

NORTH

SCALE
AS DESCRIBED ON SHEET

REVISION NO. = 1

REVISION DATE : 12-3-26