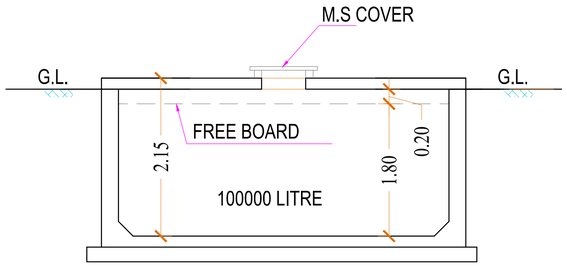

SECTION A-A

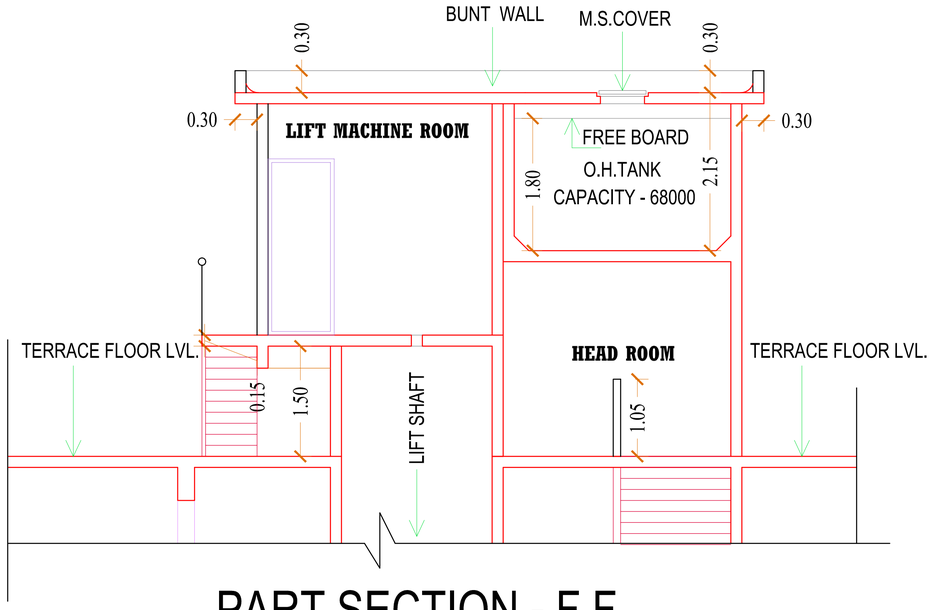

PART SECTION - F F

(SCALE - 1: 100)

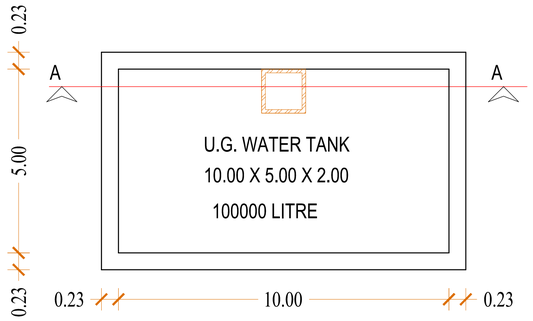

PLAN OF U.G WATER TANK

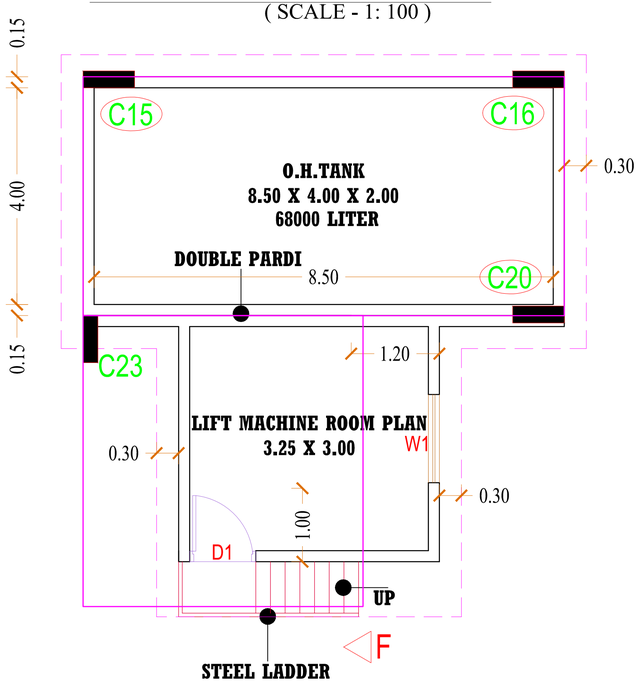

ARCHITECTS & CONSULTANTS	DATE	DRAWN BY	DESCRIPTION OF PROPOSAL & PROPERTY
De-con Consultants ARCHITECTS, INTERIOR DESIGNERS, REGD. VALUERS & PROJECT CONSULTANTS S-1, RAJASHREE TOWER, RAMBAUG, LANE No. 6, KALYAN(WEST)-421 301. PHONE NO:- 2320932	25 - 02 - 2026	TEJASVINI	REDEVELOPMENT OF EXISTING BLDG. ON PLOT BEARING S.NO.36,H.NO.-3/A/4 AT VILLAGE - CHIKANGHAR , TAL.- KALYAN, DIST. THANE .