O/H TANK

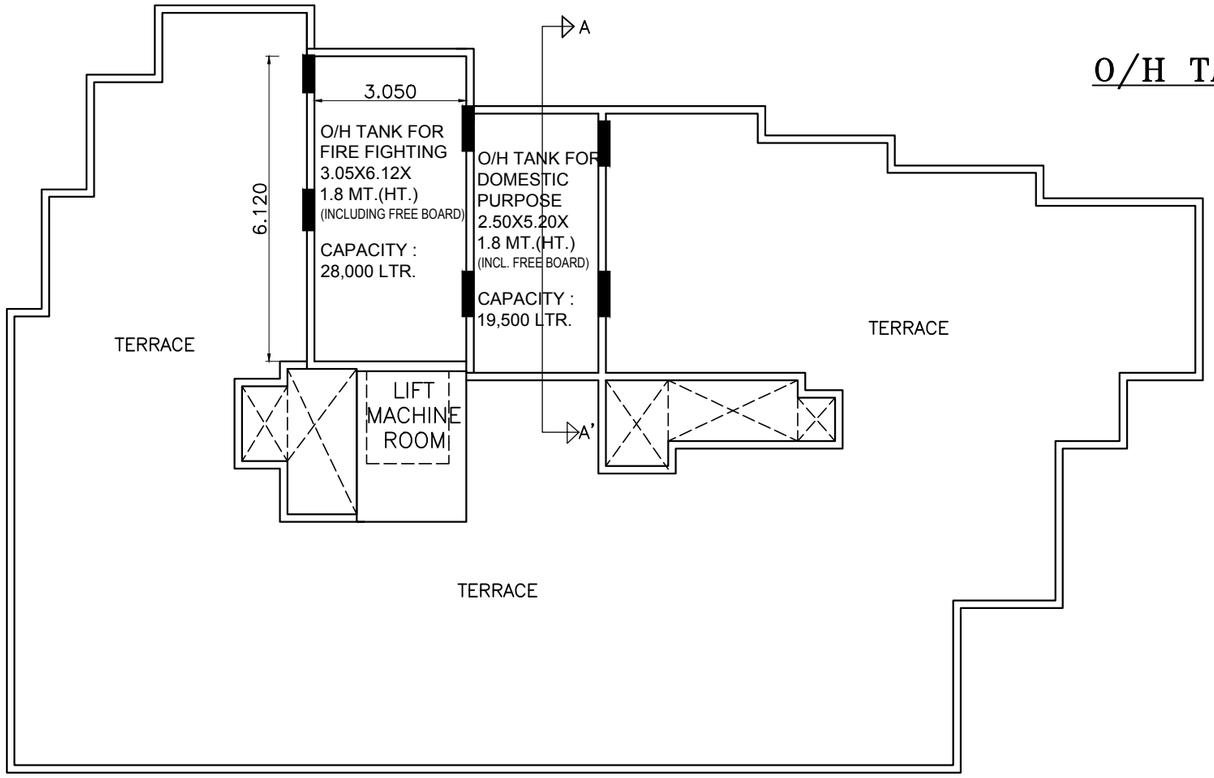

TERRACE FLOOR PLAN

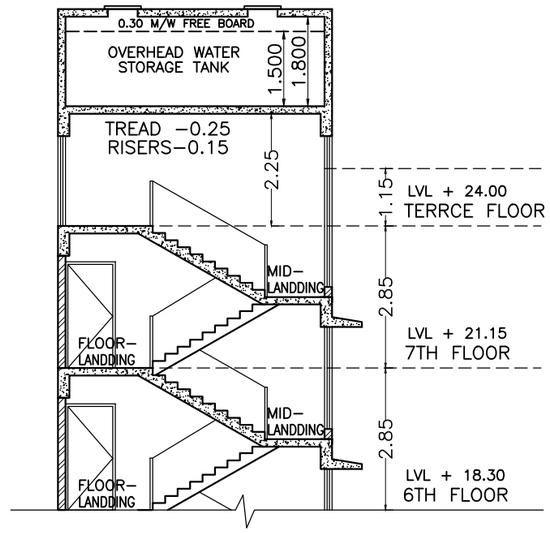

SECTION A–A' (SCALE – 1:100)

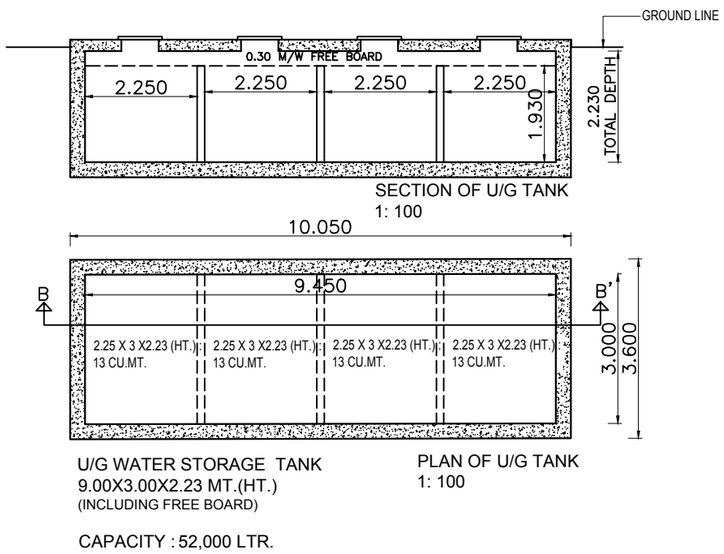

CAPACITY : 52,000 LTR.

U/G TANK

REQUIREMENTS

JAYDEEP WATER TANK CAPACITIES
3 BHK = 7 NO.S X 7 PERSON = 49 P.
2 BHK = 14 NO.S X 6 PERSON = 84 P.
1 BHK = 7 NO.S X 5 PERSON = 35 P.
TOTAL = 168 PERSON

DAILY WATER REQUIREMENT (168 X 135 = 22,680 LTR. ≈ 25000 LTR.)
DOMESTIC WATER REQUIRED = 168 X 100 = 16,800 LTR. ≈ 20,000 LTR.
FLUSHING WATER REQUIRED = 168 X 35 = 5880 LTR. ≈ 7000 LTR.)

CAPACITY OF O/H TANK
DOMESTIC = 20,000 X 60% = 12,000 LTR. (60%)
FLUSHING = 7000 LTR. (100% OF REQUIREMENTS)

TOTAL O/H TANK CAPACITY REQUIRED = 12,000+7,000 = 19,000 LTR.
TOTAL O/H TANK CAPACITY PROPOSED = 2.50X5.20X1.50(HT.) =19.5 CU.MT.= 19,500 LTR.

FIRE FIGHTING TANK REQUIRED = 25,000 LTR.
FIRE FIGHTING TANK PROPOSED = 3.05X6.12X1.5(HT.) = 28 CU.MT. = 28,000 LTR.

CAPACITY OF U/G TANK REQUIRED = 25,000 (DOMESTIC) + 25000LTR.(FIRE) = 52,000 LTR. (100%)
CAPACITY OF U/G TANK PROPOSED = 9.00 X 3.00 X 1.93 = 52CU.MT. = 52000 LTR.

WATER TANK CAPACITIES

DESCRIPTION OF PROPOSAL & PROPERTY

PROPOSED RESIDENTIAL BUILDING ON S.NO.– 208/8/C(OLD), S.NO.– 69/8/L(NEW) , CTS NO. 6758, VILLAGE– CHOLE, DOMBIVALI–(E), TAL– KALYAN, DIST– THANE.

JAYDEEP CO.OP.HSG SOC. (OWNER)
MR. ROHIT GAMBHIRRAO (P.A.HOLDER)
M/S TRI MILLENNIUM REALTIES

DRG. SH. NO.	SCALE	DESIGN BY	DRAWN BY	CHECKED BY
01 OF 01	AS STATED	---		

SIGNATURE OF ARCHITECT

NAME AND ADDRES OF ARCHITECT

RACHANA SHILP C.A. NO. 1984 / 08623
R.C. MODAK
Sreeji Arcade,
First Floor,
Above H.D.F.C.Bank,
Phadke Cross Road,
Dombivli (E)