PRODUCED BY AN AUTODESK EDUCATIONAL PRODUCT

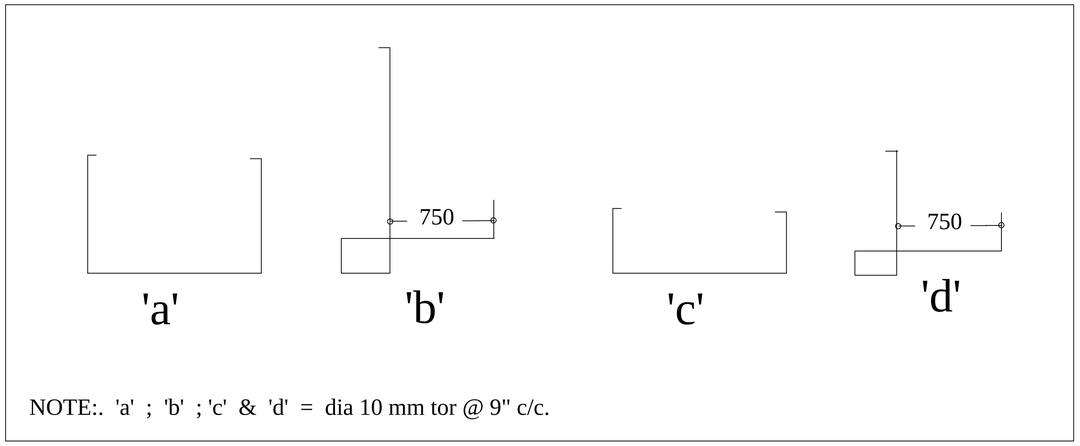

BAR BENDING SCHEDULE

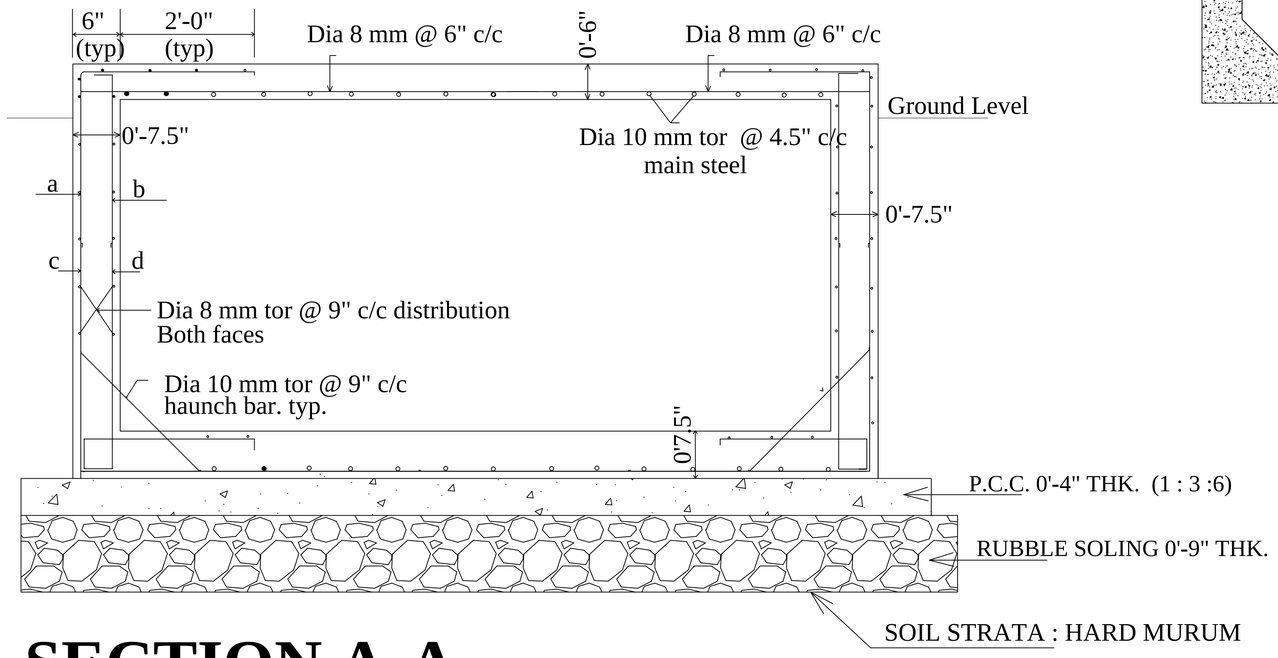

SECTION A-A

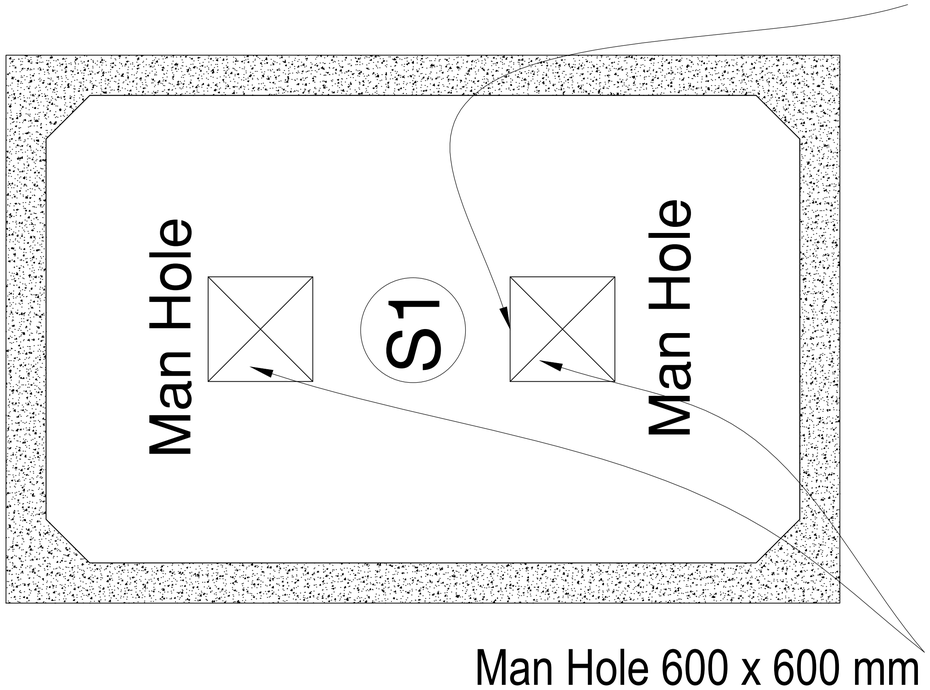

Man Hole 600 x 600 mm

LAYOUT PLAN

NOTE :- ALL CONCRETE FOR W.T - M-25

FOR WATER TANK TOP SLAB CONCRETE - M-20.

PRODUCED BY AN AUTODESK EDUCATIONAL PRODUCT
PRODUCED BY AN AUTODESK EDUCATIONAL PRODUCT
PRODUCED BY AN AUTODESK EDUCATIONAL PRODUCT