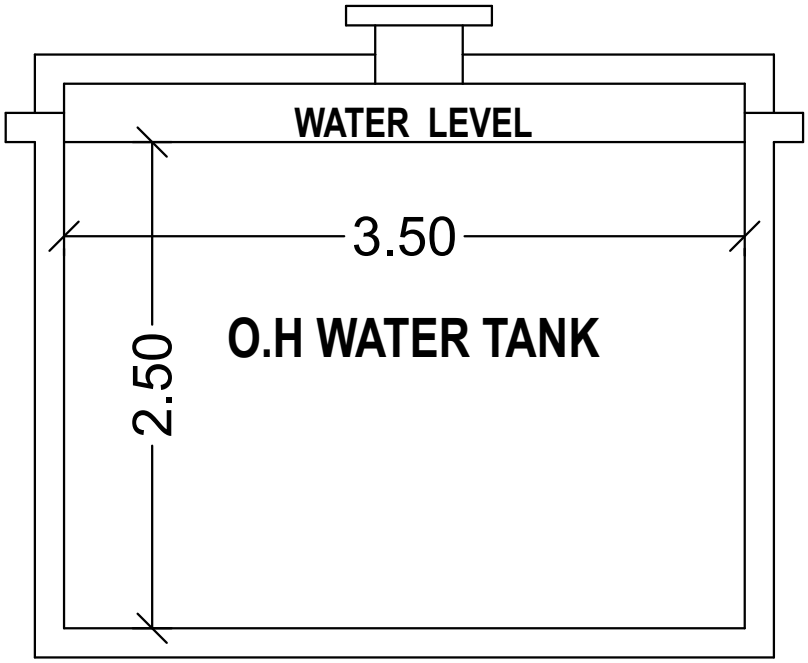

SECTION X-X'

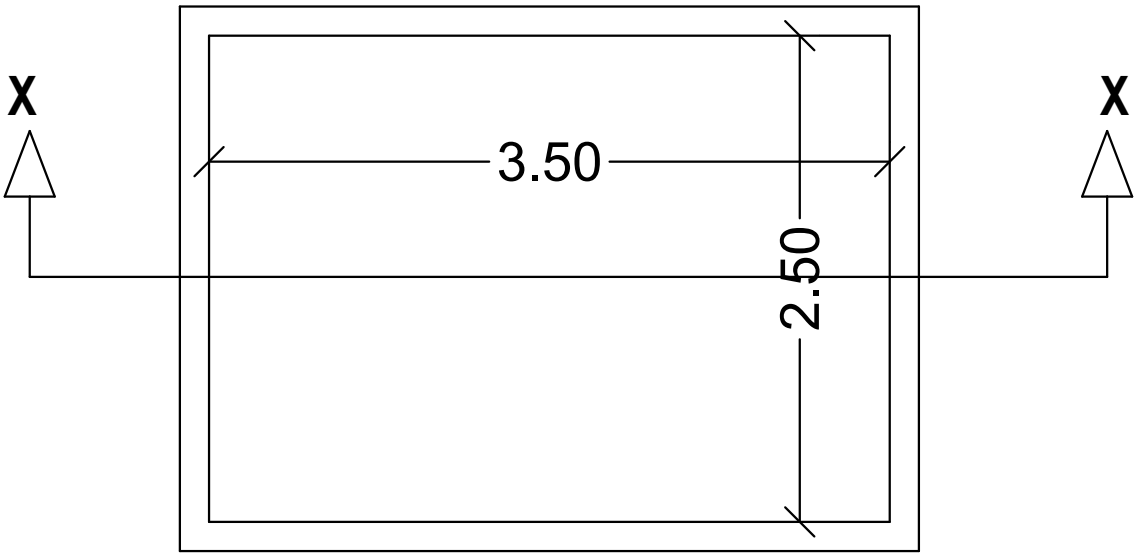

WATER TANK PLAN

SANDEEP PANDURANG PATIL

Digitally signed by SANDEEP PANDURANG PATIL
Date: 2026.02.17 19:37:25 +05'30'

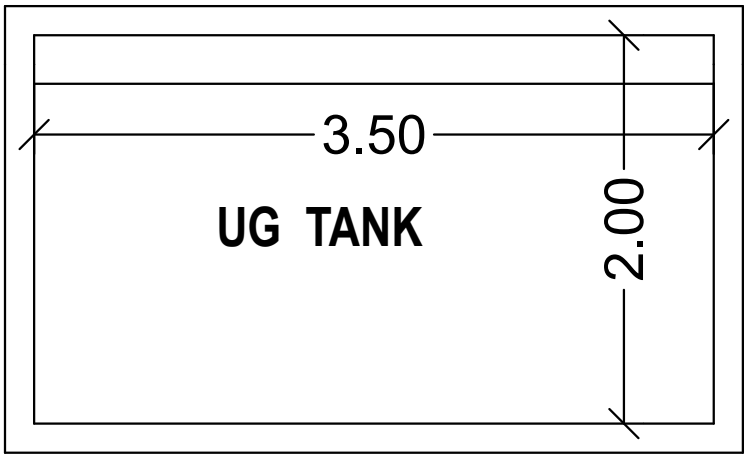

SECTION X-X'

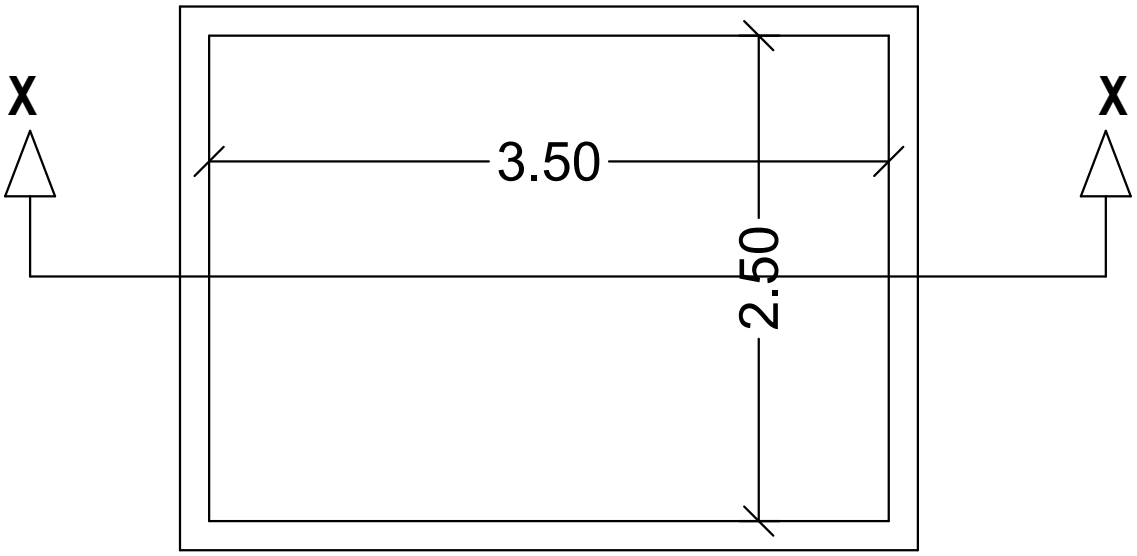

WATER TANK PLAN

SANDEEP PANDURANG PATIL

Digitally signed by SANDEEP PANDURANG PATIL
Date: 2026.02.17 19:37:55 +05'30'